REVISIONS			
REV	DESCRIPTION	DATE	APPROVED

NOTES:

1. THE PRODUCT SHOWN HEREIN IS DESIGNED AND MANUFACTURED TO COMPLY WITH REQUIREMENTS OF THE 2006 IBC & 2006 IRC WITH STATE OF TEXAS MODIFICATIONS.
2. WOOD FRAMING AND MASONRY OPENING TO BE DESIGNED AND ANCHORED TO PROPERLY TRANSFER ALL LOADS TO STRUCTURE. FRAMING AND MASONRY OPENING IS THE RESPONSIBILITY OF THE ARCHITECT OR ENGINEER OF RECORD.
3. 1X BUCK OVER MASONRY/CONCRETE IS OPTIONAL.
4. WHERE SHIM OR BUCK THICKNESS IS LESS THAN 1–1/2" WINDOW UNITS MUST BE ANCHORED THROUGH THE FRAME IN ACCORDANCE WITH MANUFACTURER'S PUBLISHED INSTALLATION INSTRUCTIONS. ANCHORS SHALL BE SECURELY FASTENED DIRECTLY INTO MASONRY, CONCRETE OR OTHER STRUCTURAL SUBSTRATE MATERIAL.
5. WHERE WOOD BUCK THICKNESS IS 1–1/2" OR GREATER, BUCK SHALL BE SECURELY FASTENED TO MASONRY, CONCRETE OR OTHER STRUCTURAL SUBSTRATE. WINDOW UNITS MAY BE ANCHORED THROUGH FRAME TO SECURED WOOD BUCK IN ACCORDANCE WITH MANUFACTURER'S PUBLISHED INSTALLATION INSTRUCTIONS.
6. WHERE 1X BUCK IS NOT USED DISSIMILAR MATERIALS MUST BE SEPARATED WITH APPROVED COATING OR MEMBRANE. SELECTION OF COATING OR MEMBRANE IS THE RESPONSIBILITY OF THE ARCHITECT OR ENGINEER OF RECORD.
7. BUCKS SHALL EXTEND BEYOND WINDOW INTERIOR FACE SO THAT FULL FRAME SUPPORT IS PROVIDED.
8. FOR FIN INSTALLATION SHIM AS NEEDED. FOR FRAME INSTALLATION SHIM AS REQUIRED AT EACH ANCHOR LOCATION WITH LOAD BEARING SHIM. SHIM WHERE SPACE OF 1/16" OR GREATER OCCURS. MAXIMUM ALLOWABLE SHIM STACK TO BE 1/4".
9. SHIMS SHALL BE LOCATED, APPLIED AND MADE FROM MATERIALS AND THICKNESS CAPABLE OF SUSTAINING APPLICABLE LOADS.
10. WIND LOAD DURATION FACTOR Cd=1.6 WAS USED FOR WOOD ANCHOR CALCULATIONS.
11. FRAME MATERIAL: ALUMINUM 6063–T5.
12. UNITS MUST BE GLAZED PER ASTM E1300–04, SEE SHEET 3 FOR GLASS OPTIONS.
13. APPROVED IMPACT PROTECTIVE SYSTEM <u>IS NOT REQUIRED</u> FOR THIS PRODUCT IN WIND BORNE DEBRIS REGIONS.
14. FOR ANCHORING INTO WOOD FRAMING OR 2X BUCK USE #14 WOOD SCREWS WITH SUFFICIENT LENGTH TO ACHIEVE A 1 7/16" MINIMUM EMBEDMENT INTO SUBSTRATE. LOCATE ANCHORS AS SHOWN IN ELEVATIONS AND INSTALLATION DETAILS.
15. FOR ANCHORING INTO MASONRY/CONCRETE USE 1/4" TAPCONS WITH SUFFICIENT LENGTH TO ACHIEVE A 1 1/4" MINIMUM EMBEDMENT INTO SUBSTRATE WITH 2 1/2'' MINIMUM EDGE DISTANCE. LOCATE ANCHORS AS SHOWN IN ELEVATIONS AND INSTALLATION DETAILS.
16. FOR ANCHORING INTO METAL STRUCTURE USE #12 SMS OR SELF DRILLING SCREWS WITH SUFFICIENT LENGTH TO ACHIEVE 3 THREADS MINIMUM BEYOND STRUCTURE INTERIOR WALL. LOCATE ANCHORS AS SHOWN IN ELEVATIONS AND INSTALLATION DETAILS.
17. ALL FASTENERS TO BE CORROSION RESISTANT.
18. INSTALLATION ANCHORS SHALL BE INSTALLED IN ACCORDANCE WITH ANCHOR MANUFACTURER'S INSTALLATION INSTRUCTIONS AND ANCHORS SHALL NOT BE USED IN SUBSTRATES WITH STRENGTHS LESS THAN THE MINIMUM STRENGTH SPECIFIED BELOW:
    A. WOOD – MINIMUM SPECIFIC GRAVITY OF G=0.42
    B. CONCRETE – MINIMUM COMPRESSIVE STRENGTH OF 3,192 PSI.
    C. MASONRY – STRENGTH CONFORMANCE TO ASTM C–90, GRADE N, TYPE 1 (OR GREATER).
    D. METAL STRUCTURE: STEEL 18GA, 33KSI OR ALUMINUM 6063–T5 1/8" THICK MINIMUM

SIGNED: 03/13/2015

TABLE OF CONTENTS

SHEET NO.	DESCRIPTION
1	NOTES
2	ELEVATION
3 – 4	CROSS SECTIONS AND GLAZING DETAIL
5 – 8	INSTALLATION DETAILS
9	COMPONENTS

© Copyright 2012 Solar Innovations, Inc. All Rights Reserved. These drawings are applicable only to the product specified herein, are the exclusive sole property of Solar Innovations, Inc., and are considered both confidential and proprietary. Any use of the information, design or drawings contained herein for any purpose whatsoever without the expressed written consent of a Solar Innovations, Inc. authorized individual is forbidden.

SOLAR INNOVATIONS, INC.
31 ROBERTS ROAD
PINE GROVE, PA 17963

G3 MULTI TRACK
SLIDING GLASS DOOR – IMPACT
NOTES

DRAWN:	DWG NO.	REV
N.G.	08–02637	–

SCALE	DATE	SHEET
NTS	03/12/15	1 OF 9

Luis R. Lomas P.E.
Texas No. 101889

REVISIONS			
REV	DESCRIPTION	DATE	APPROVED

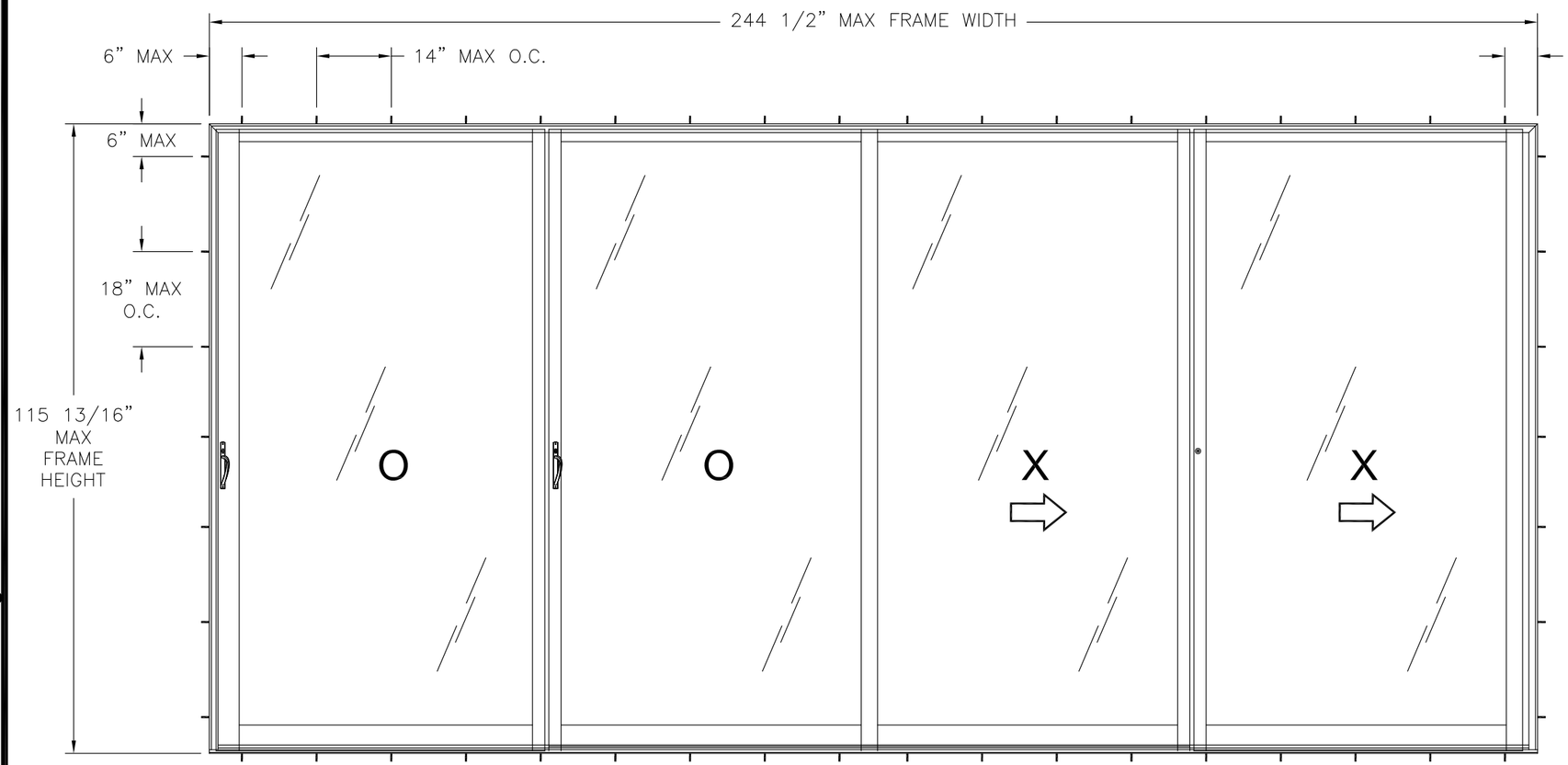

NOTES:
1. OPERABLE PANEL MAXIMUM SIZE: 63 3/4" X 114 3/8"
2. FIXED PANEL MAXIMUM SIZE: 63 1/8" X 114 3/8"
3. OPERABLE PANEL MAXIMUM D.L.O.: 58 1/2" X 107 1/4"
4. FIXED PANEL MAXIMUM D.L.O.: 55 5/8" X 107 1/4"
5. (2) 1/4" DIAMETER WEEP HOLE LOCATED 6", 34", 59 1/2", 92 3/8" AND 119 1/4" FROM EACH END OF EXTERIOR SILL FACE
6. (1) 1 1/4" X 1/4" WEEP HOLE WITH PLASTIC FLAP LOCATED 6", 34", 59 1/2", 65 1/2", 92 3/8" AND 119 1/4" FROM EACH END OF EXTERIOR SILL FACE.

G3 MULTI TRACK SGD

EXTERIOR VIEW

DESIGN PRESSURE RATING	*IMPACT RATING*
+50.0/-70.0PSF	*LARGE AND SMALL MISSILE IMPACT*

MISSILE LEVEL D, WIND ZONE 4

HARDWARE SCHEDULE	
A.	SINGLE HANDLE 4 POINT LOCK LIFT & SLIDE
B.	NYLON ROLLER WITH METAL HOUSING

SIGNED: 03/13/2015

© Copyright 2012 Solar Innovations, Inc. All Rights Reserved. These drawings are applicable only to the product specified herein, are the exclusive sole property of Solar Innovations, Inc., and are considered both confidential and proprietary. Any use of the information, design or drawings contained herein for any purpose whatsoever without the expressed written consent of a Solar Innovations, Inc. authorized individual is forbidden.

SOLAR INNOVATIONS, INC.
31 ROBERTS ROAD
PINE GROVE, PA 17963

G3 MULTI TRACK
SLIDING GLASS DOOR – IMPACT
ELEVATION

DRAWN: N.G.	DWG NO. 08-02637	REV –
SCALE NTS	DATE 03/12/15	SHEET 2 OF 9

STATE OF TEXAS
LUIS R. LOMAS
101889
LICENSED
PROFESSIONAL ENGINEER

Luis R. Lomas P.E.
Texas No. 101889

REVISIONS			
REV	DESCRIPTION	DATE	APPROVED

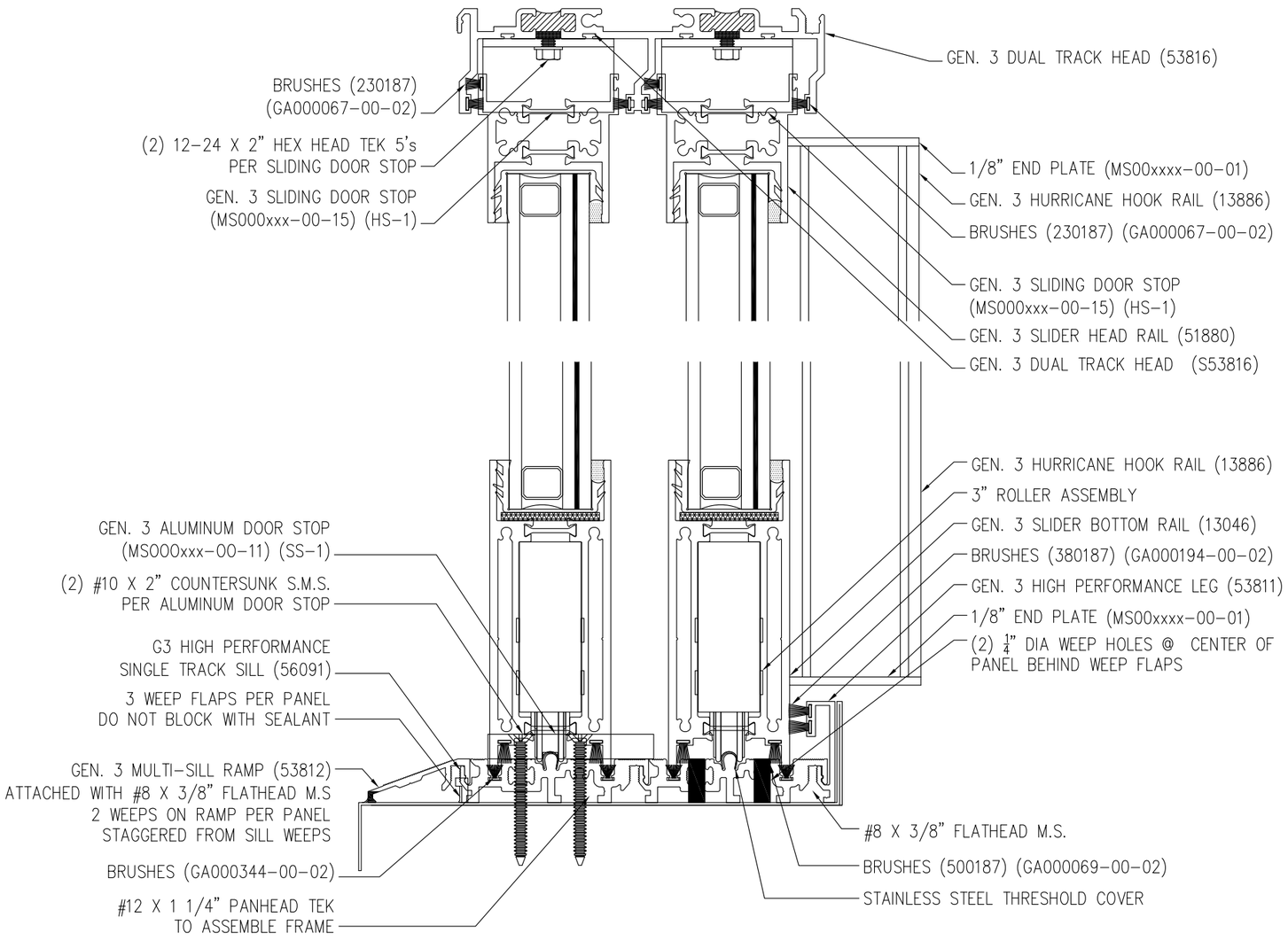

VERTICAL CROSS SECTION

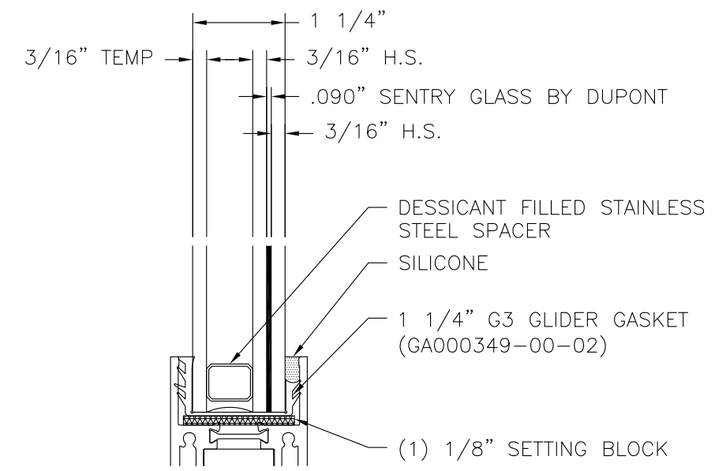

GLAZING DETAIL

SIGNED: 03/13/2015

© Copyright 2012 Solar Innovations, Inc. All Rights Reserved. These drawings are applicable only to the product specified herein, are the exclusive sole property of Solar Innovations, Inc., and are considered both confidential and proprietary. Any use of the information, design or drawings contained herein for any purpose whatsoever without the expressed written consent of a Solar Innovations, Inc. authorized individual is forbidden.

SOLAR INNOVATIONS, INC.
31 ROBERTS ROAD
PINE GROVE, PA 17963

G3 MULTI TRACK
SLIDING GLASS DOOR – IMPACT
VERTICAL CROSS SECTION

DRAWN:	DWG NO.	REV
N.G.	08-02637	–
SCALE NTS	DATE 03/12/15	SHEET 3 OF 9

STATE OF TEXAS
LUIS R. LOMAS
101889
LICENSED
PROFESSIONAL ENGINEER

Luis R. Lomas P.E.
Texas No. 101889

REVISIONS			
REV	DESCRIPTION	DATE	APPROVED

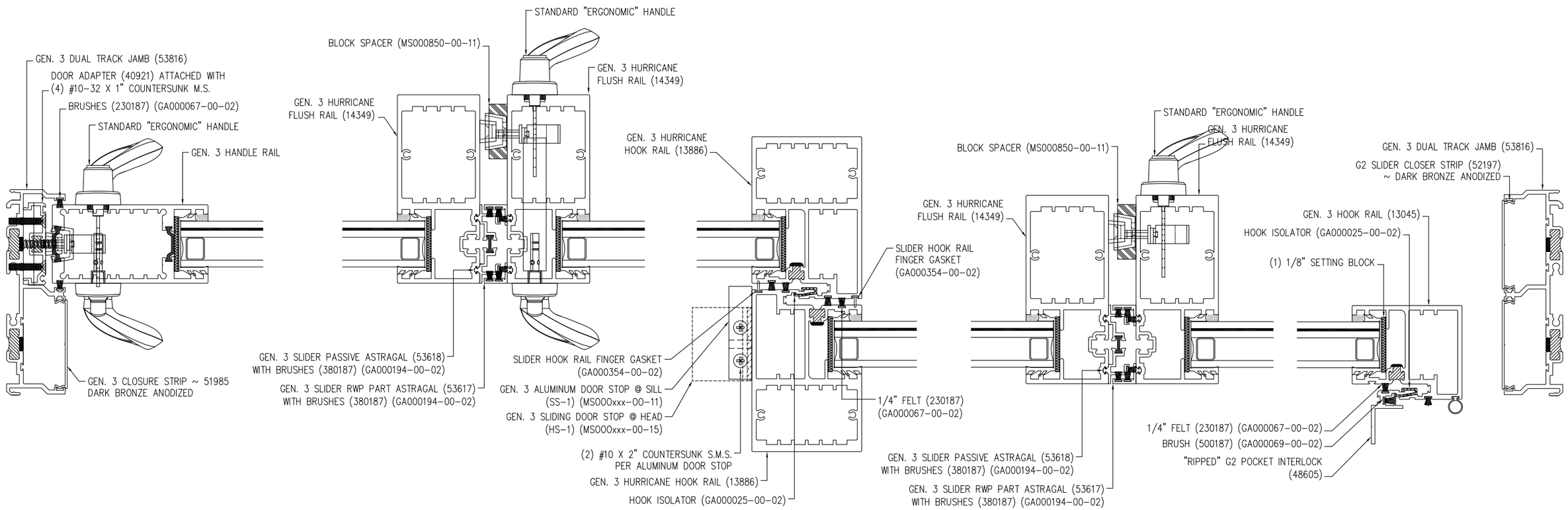

HORIZONTAL CROSS SECTION

SIGNED: 03/13/2015

© Copyright 2012 Solar Innovations, Inc. All Rights Reserved. These drawings are applicable only to the product specified herein, are the exclusive sole property of Solar Innovations, Inc., and are considered both confidential and proprietary. Any use of the information, design or drawings contained herein for any purpose whatsoever without the expressed written consent of a Solar Innovations, Inc. authorized individual is forbidden.

SOLAR INNOVATIONS, INC.
31 ROBERTS ROAD
PINE GROVE, PA 17963

G3 MULTI TRACK
SLIDING GLASS DOOR – IMPACT
HORIZONTAL CROSS SECTION

DRAWN:	DWG NO.	REV
N.G.	08-02637	–
SCALE NTS	DATE 03/12/15	SHEET 4 OF 9

STATE OF TEXAS
LUIS R. LOMAS
101889
LICENSED
PROFESSIONAL ENGINEER

Luis R. Lomas P.E.
Texas No. 101889

REVISIONS			
REV	DESCRIPTION	DATE	APPROVED

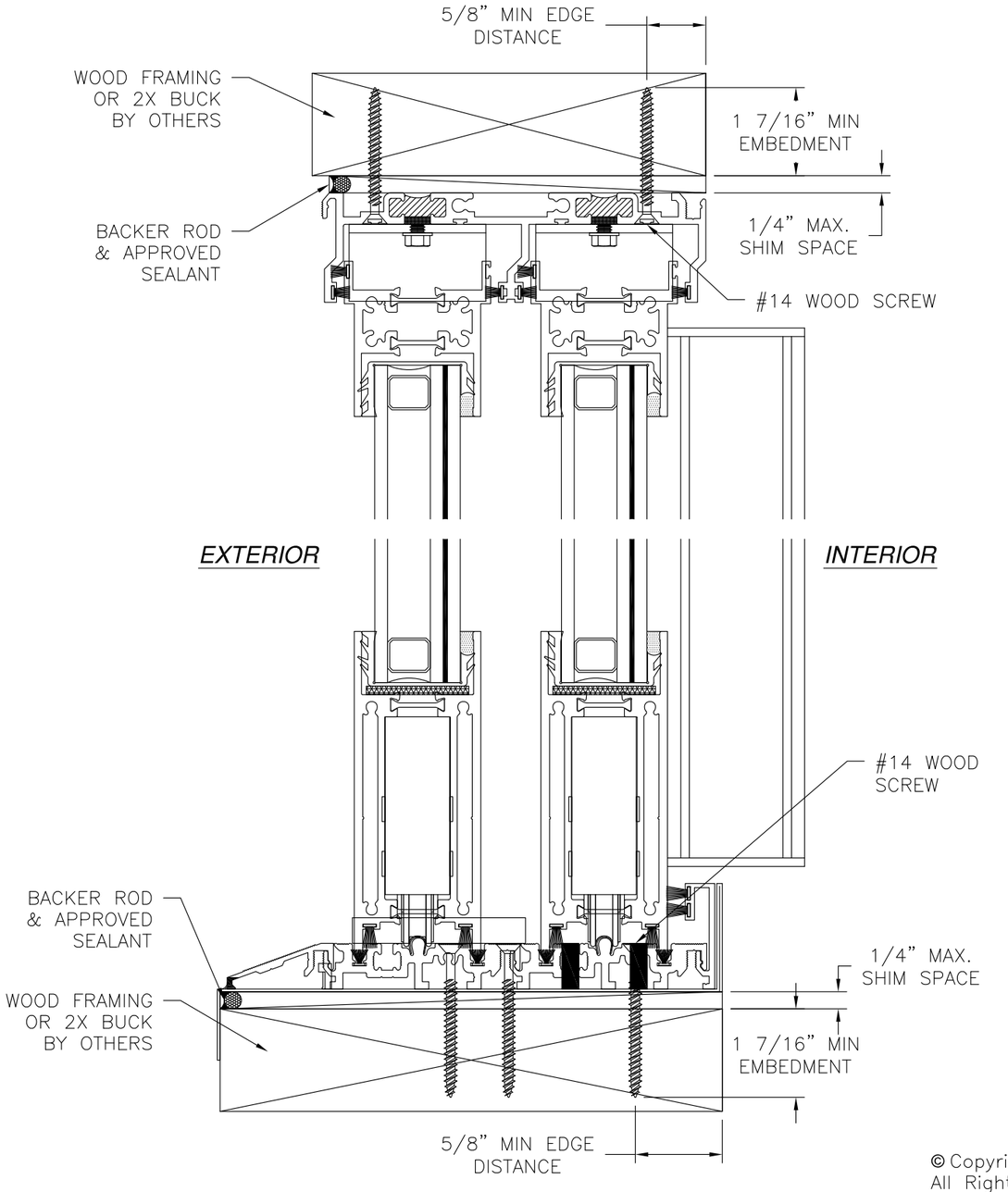

VERTICAL CROSS SECTION

WOOD FRAMING OR 2X BUCK INSTALLATION

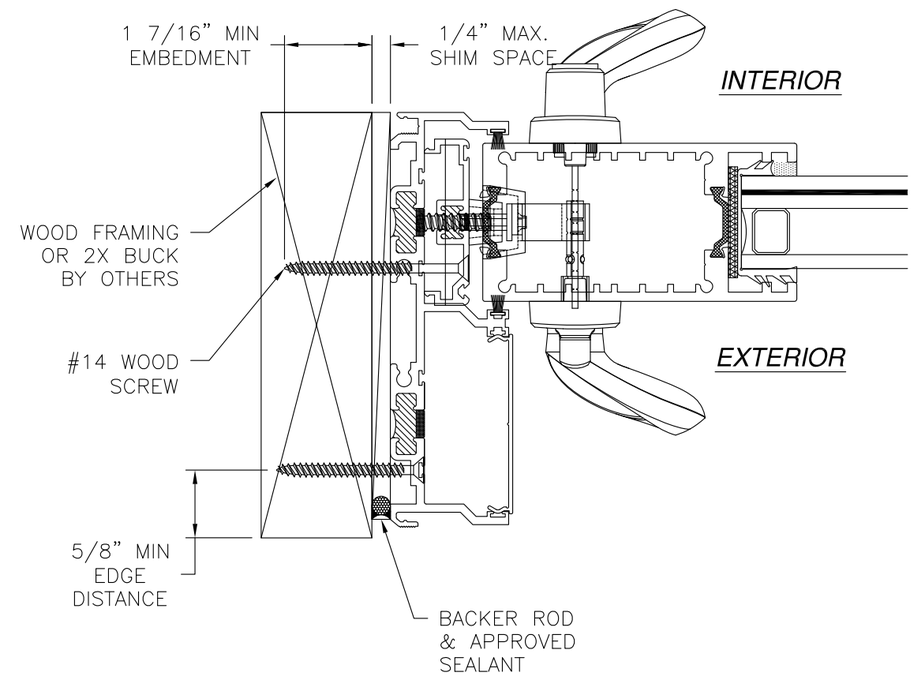

JAMB INSTALLATION DETAIL

WOOD FRAMING OR 2X BUCK INSTALLATION

NOTES:
1. INTERIOR AND EXTERIOR FINISHES, BY OTHERS, NOT SHOWN FOR CLARITY.
2. PERIMETER AND JOINT SEALANT BY OTHERS TO BE DESIGNED IN ACCORDANCE WITH ASTM E2112

© Copyright 2012 Solar Innovations, Inc. All Rights Reserved. These drawings are applicable only to the product specified herein, are the exclusive sole property of Solar Innovations, Inc., and are considered both confidential and proprietary. Any use of the information, design or drawings contained herein for any purpose whatsoever without the expressed written consent of a Solar Innovations, Inc. authorized individual is forbidden.

SIGNED: 03/13/2015

SOLAR INNOVATIONS, INC.
31 ROBERTS ROAD
PINE GROVE, PA 17963

G3 MULTI TRACK
SLIDING GLASS DOOR – IMPACT
INSTALLATION DETAILS

DRAWN: N.G.	DWG NO. 08–02637	REV –
SCALE NTS	DATE 03/12/15	SHEET 5 OF 9

STATE OF TEXAS
LUIS R. LOMAS
101889
LICENSED
PROFESSIONAL ENGINEER

Luis R. Lomas P.E.
Texas No. 101889

REVISIONS			
REV	DESCRIPTION	DATE	APPROVED

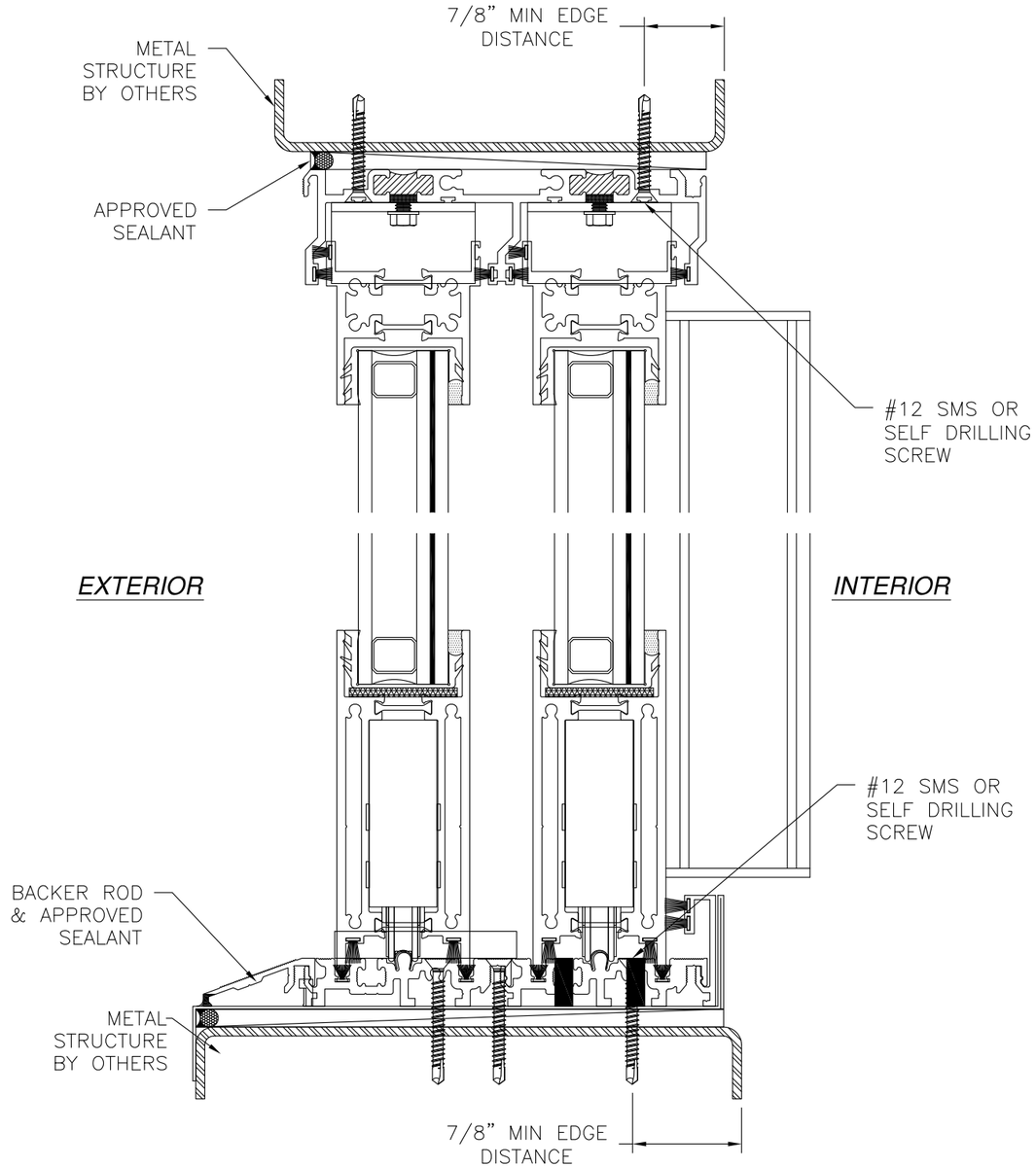

VERTICAL CROSS SECTION
METAL STRUCTURE INSTALLATION

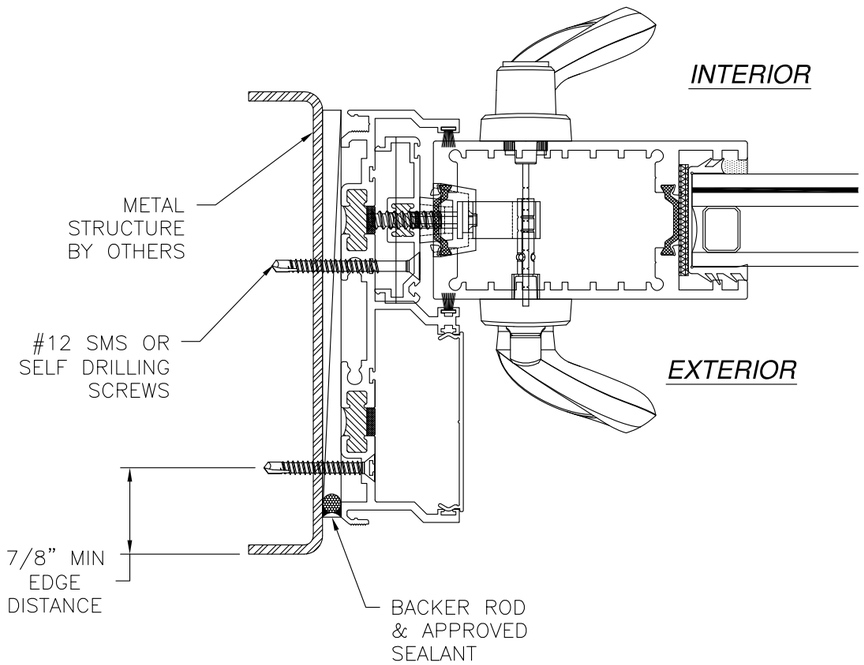

JAMB INSTALLATION DETAIL
METAL STRUCTURE INSTALLATION

NOTES:
1. INTERIOR AND EXTERIOR FINISHES, BY OTHERS, NOT SHOWN FOR CLARITY.
2. PERIMETER AND JOINT SEALANT BY OTHERS TO BE DESIGNED IN ACCORDANCE WITH ASTM E2112

© Copyright 2012 Solar Innovations, Inc. All Rights Reserved. These drawings are applicable only to the product specified herein, are the exclusive sole property of Solar Innovations, Inc., and are considered both confidential and proprietary. Any use of the information, design or drawings contained herein for any purpose whatsoever without the expressed written consent of a Solar Innovations, Inc. authorized individual is forbidden.

SIGNED: 03/13/2015

SOLAR INNOVATIONS, INC.
31 ROBERTS ROAD
PINE GROVE, PA 17963

G3 MULTI TRACK
SLIDING GLASS DOOR – IMPACT
INSTALLATION DETAILS

DRAWN:	DWG NO.	REV
N.G.	08–02637	–

SCALE	DATE	SHEET
NTS	03/12/15	6 OF 9

Luis R. Lomas P.E.
Texas No. 101889

REVISIONS			
REV	DESCRIPTION	DATE	APPROVED

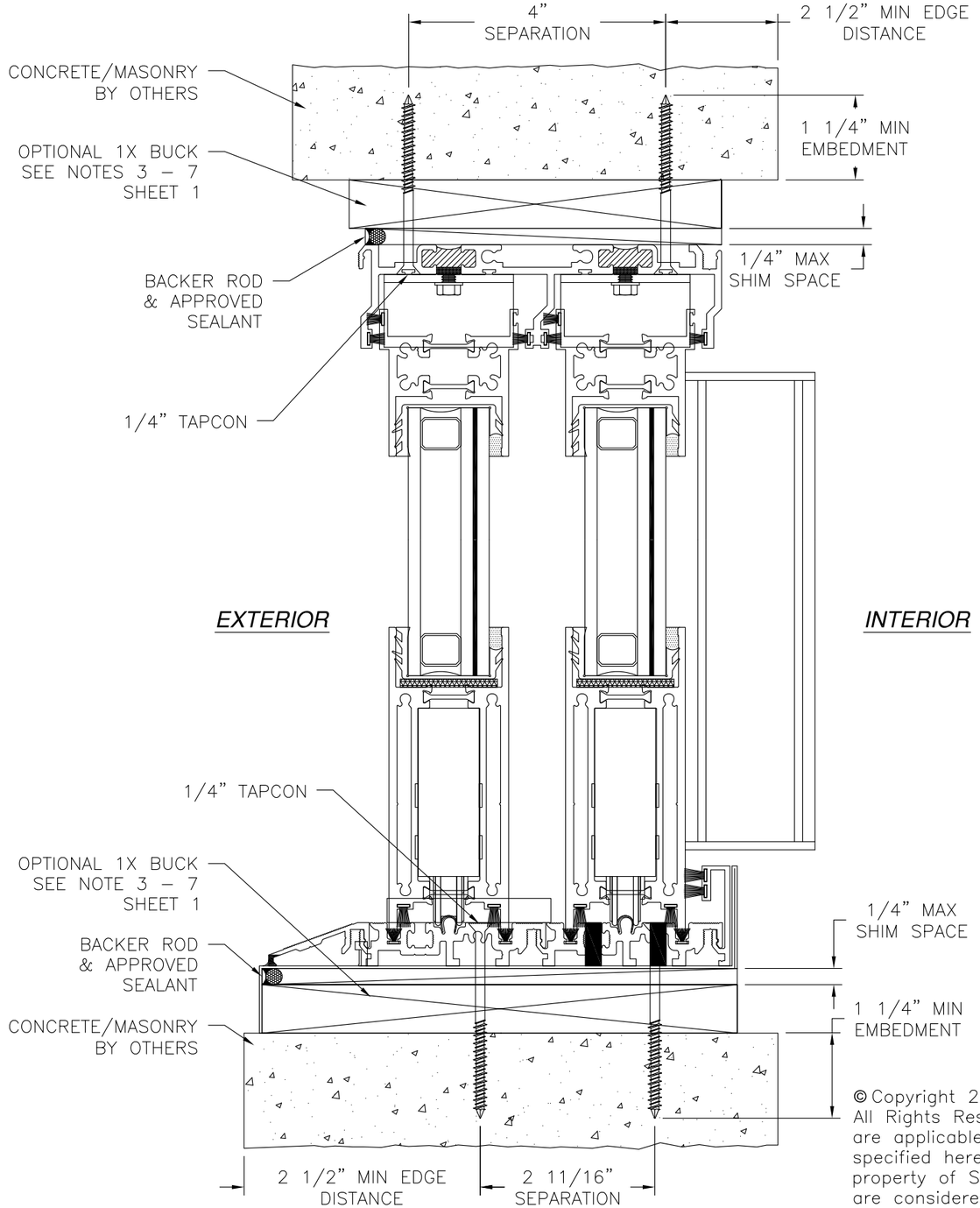

VERTICAL CROSS SECTION
CONCRETE/MASONRY INSTALLATION

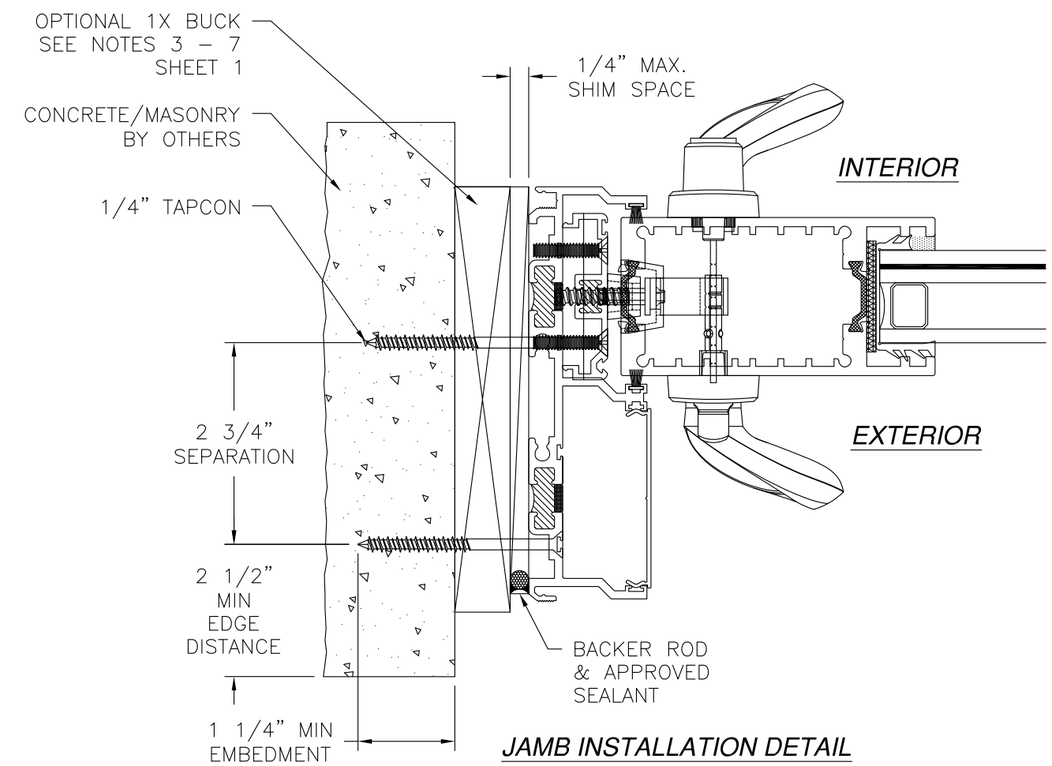

JAMB INSTALLATION DETAIL
CONCRETE/MASONRY INSTALLATION

NOTES:
1. INTERIOR AND EXTERIOR FINISHES, BY OTHERS, NOT SHOWN FOR CLARITY.
2. PERIMETER AND JOINT SEALANT BY OTHERS TO BE DESIGNED IN ACCORDANCE WITH ASTM E2112

SIGNED: 03/13/2015

© Copyright 2012 Solar Innovations, Inc. All Rights Reserved. These drawings are applicable only to the product specified herein, are the exclusive sole property of Solar Innovations, Inc., and are considered both confidential and proprietary. Any use of the information, design or drawings contained herein for any purpose whatsoever without the expressed written consent of a Solar Innovations, Inc. authorized individual is forbidden.

SOLAR INNOVATIONS, INC.
31 ROBERTS ROAD
PINE GROVE, PA 17963

G3 MULTI TRACK
SLIDING GLASS DOOR – IMPACT
INSTALLATION DETAILS

DRAWN: N.G.	DWG NO. 08–02637	REV –
SCALE NTS	DATE 03/12/15	SHEET 7 OF 9

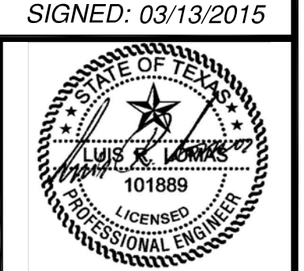

Luis R. Lomas P.E.
Texas No. 101889

REVISIONS			
REV	DESCRIPTION	DATE	APPROVED

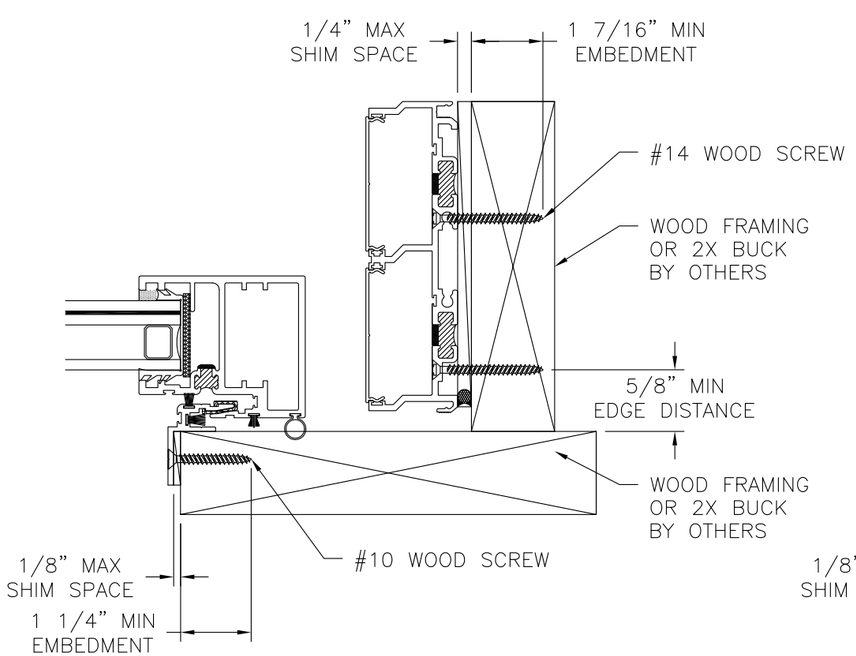

JAMB INSTALLATION DETAIL

WOOD FRAMING OR 2X BUCK INSTALLATION

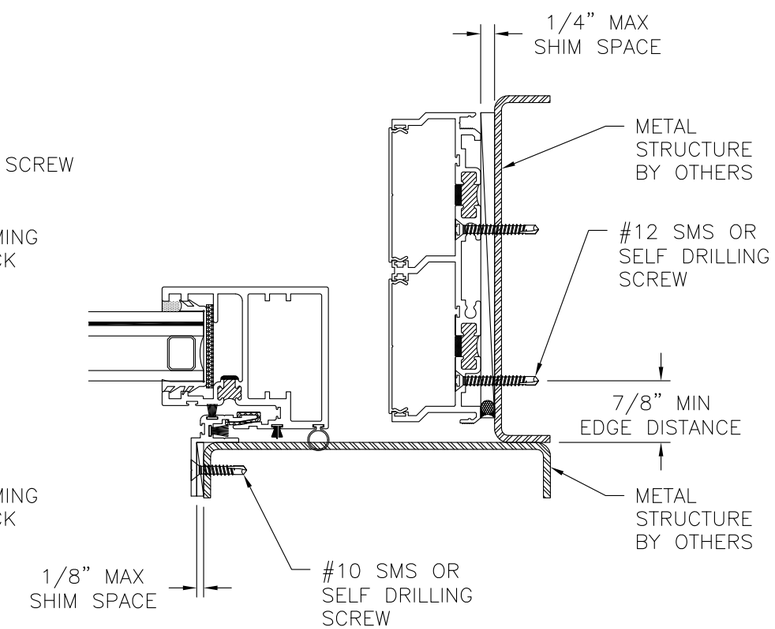

JAMB INSTALLATION DETAIL

METAL STRUCTURE INSTALLATION

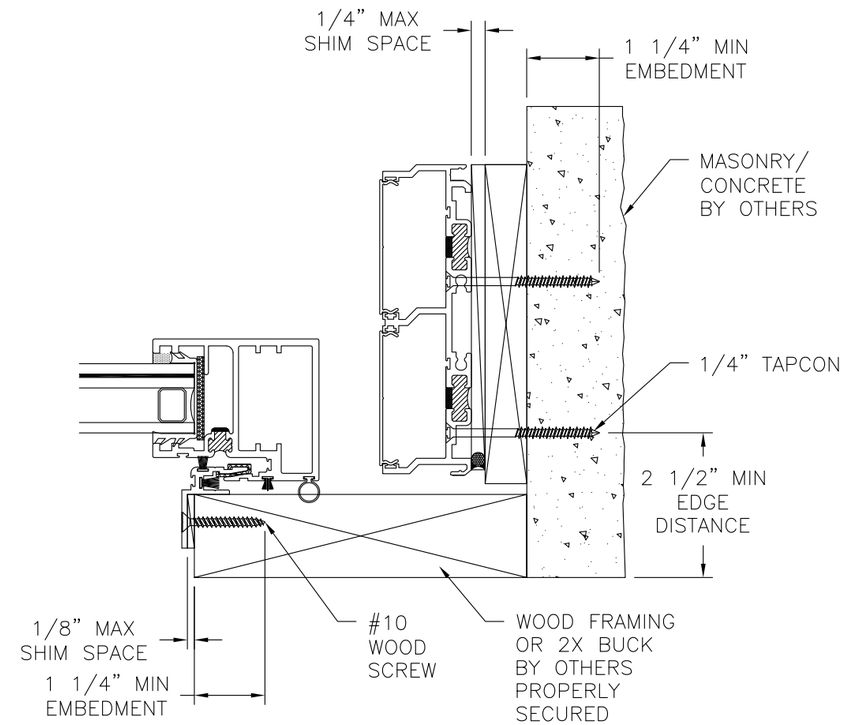

JAMB INSTALLATION DETAIL

CONCRETE/MASONRY INSTALLATION

SIGNED: 03/13/2015

© Copyright 2012 Solar Innovations, Inc. All Rights Reserved. These drawings are applicable only to the product specified herein, are the exclusive sole property of Solar Innovations, Inc., and are considered both confidential and proprietary. Any use of the information, design or drawings contained herein for any purpose whatsoever without the expressed written consent of a Solar Innovations, Inc. authorized individual is forbidden.

SOLAR INNOVATIONS, INC.
31 ROBERTS ROAD
PINE GROVE, PA 17963

G3 MULTI TRACK
SLIDING GLASS DOOR – IMPACT
POCKET INSTALLATION DETAILS

DRAWN:	DWG NO.	REV
N.G.	08–02637	–

SCALE	DATE	SHEET
NTS	03/12/15	8 OF 9

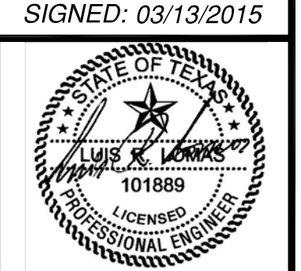

Luis R. Lomas P.E.
Texas No. 101889

REVISIONS			
REV	DESCRIPTION	DATE	APPROVED

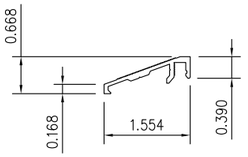

1 THERMAL SLIDER EXTERIOR RAMP

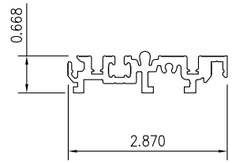

2 G3 HIGH PERFORMANCE SINGLE TRACK SILL

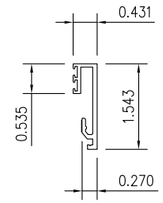

3 THERMAL SLIDER HIGH-PERFORMANCE LEG

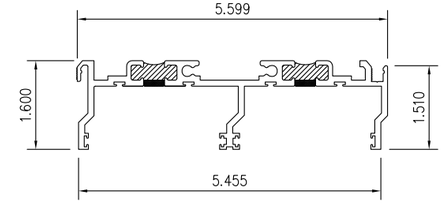

4 G3 THERMAL SLIDER DUAL TRACK HEAD / JAMB

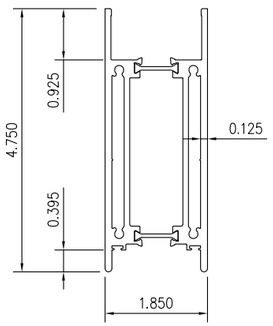

5 G3 SLIDER BOTTOM RAIL

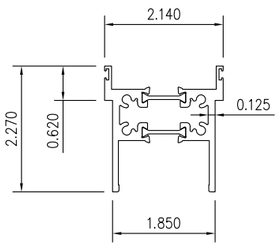

6 G3 SLIDER HEAD RAIL

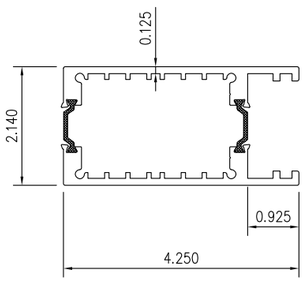

7 G3 SLIDER HANDLE RAIL

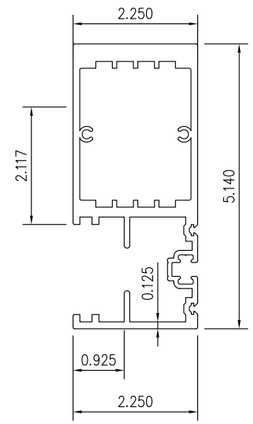

8 G3 HURRICANE FLUSH RAIL

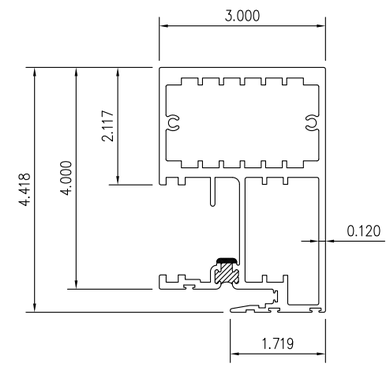

9 G3 HURRICANE HOOK RAIL

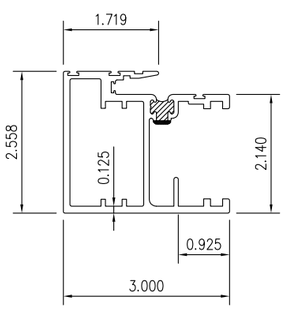

10 G3 SLIDER HOOK RAIL

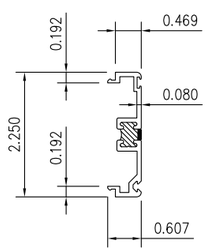

11 DOOR ADAPTER

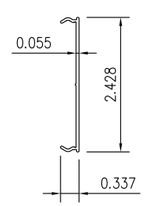

12 G3 SLIDER CLOSURE STRIP

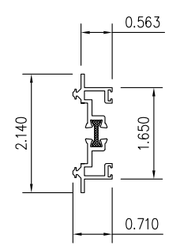

13 G3 SLIDER PASSIVE ASTRAGAL

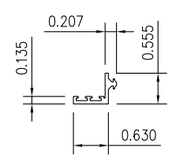

14 G3 SLIDER RWP PART ASTRAGAL

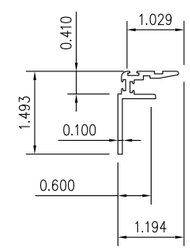

15 POCKET INTERLOCK

SIGNED: 03/13/2015

© Copyright 2012 Solar Innovations, Inc. All Rights Reserved. These drawings are applicable only to the product specified herein, are the exclusive sole property of Solar Innovations, Inc., and are considered both confidential and proprietary. Any use of the information, design or drawings contained herein for any purpose whatsoever without the expressed written consent of a Solar Innovations, Inc. authorized individual is forbidden.

SOLAR INNOVATIONS, INC.
31 ROBERTS ROAD
PINE GROVE, PA 17963

G3 MULTI TRACK
SLIDING GLASS DOOR – IMPACT
COMPONENTS

DRAWN:	DWG NO.	REV
N.G.	08-02637	–
SCALE NTS	DATE 03/12/15	SHEET 9 OF 9

Luis R. Lomas P.E.
Texas No. 101889