SERIES MSD-375 (MEDIUM) & WSD-500 (WIDE) STILE OUT SWING ALUMINUM ENTRANCE DOORS W/ LARGE & SMALL MISSILE IMPACT RESISTANT GLASS

GENERAL NOTES:

1. ALUMINUM ENTRANCE DOOR SHOWN ON THIS PRODUCT EVALUATION DOCUMENT (P.E.D.) HAS BEEN VERIFIED FOR COMPLIANCE IN ACCORDANCE WITH THE 2006 EDITION OF THE INTERNATIONAL BUILDING CODE, (I.B.C) AND INTERNATIONAL RESIDENTIAL CODE, (I.R.C) WITH THE 2006 TEXAS REVISIONS, EFFECTIVE JANUARY 1, 2008.

   DESIGN WIND LOADS SHALL BE DETERMINED AS PER SECTION 1609 OF THE INTERNATIONAL BUILDING CODE, FOR A BASIC WIND SPEED AS REQUIRED BY THE JURISDICTION WHERE PRODUCT WILL BE INSTALLED, AND FOR A DIRECTIONALITY FACTOR Kd = 0.85, IN ACCORDANCE WITH ASCE 7-05 STANDARD, AND SHALL NOT EXCEED THE DESIGN PRESSURE RATING INDICATED ON NOTE 2.

   IN ORDER TO VERIFY THAT ANCHORS ON THIS P.E.D., AS TESTED, WERE NOT OVERSTRESSED, A 33% INCREASE IN ALLOWABLE STRESS FOR WIND LOADS WAS NOT USED IN THEIR ANALYSIS. FASTENERS SPACING TO WOOD HAS BEEN DETERMINED IN ACCORDANCE WITH N.D.S. 2005.

   MSD-375 & MSD-500 ALUMINUM ENTRANCE DOOR ADEQUACY FOR IMPACT AND CYCLIC RESISTANCE HAS BEEN VERIFIED IN ACCORDANCE WITH SECTIONS 1609.1.4 AND R301.2.1.2 OF THE ABOVE MENTIONED CODES RESPECTIVELY, AS PER FLORIDA BUILDING CODE HIGH VELOCITY HURRICANE ZONES PROTOCOLS TAS-201, TAS-202, TAS-203, PER HURRICANE TESTING LABORATORY REPORTS # HTL-0105-1030-02, HTL-0105-0712-03, HTL-0105-0205-03, HTL-0105-0810-03, HTL-0105-0210-04 AND HTL-0105-0407-04; PER CERTIFIED TESTING LABORATORIES REPORT # CTLA-1177W (FOR DOOR CERTIFICATION INSTALLATION WITH FG-5000 AND FG-5100 WINDOW WALL SYSTEM); PER ARCHITECTURAL TESTING LAB REPORTS # C0344.01-450-18, 95631.01-401-18 (NEW PANIC HARDWARE) PER CONSTRUCTION CONSULTING LABORATORY REPORTS #CCLI-14-128, AND AS PER SUBMITTED STRUCTURAL CALCULATIONS, PERFORMED AS PER SECTION 1604 OF THE ABOVE MENTIONED BUILDING CODE.

2. MAXIMUM DESIGN PRESSURE RATING FOR 3'-6"x8'-0" SINGLE OR 7'-0"X8'-0" PAIR OF DOORS SHALL BE +70 psf, -80 psf. WHEN USED WITH LAMINATED GLASS, AND MAX. +70 psf, -70 psf WHEN USED WITH INSULATED GLASS. MAXIMUM DESIGN PRESSURE RATING FOR 3'-6"x8'-0" SINGLE OR 7'-0"X8'-0" PAIR OF DOORS SHALL BE +60 psf, -60 psf. WHEN SARGENT OR CORBIN RUSSWIN EXIT DEVICES ARE USED (SEE SHEETS 6 & 7).USE SEALANT #37 FOR UP TO +70 psf, -80 psf DESIGN PRESSURE RATING. USE SEALANT # 37A FOR UP TO +70 psf, -70 psf DESIGN PRESSURE RATING.

3. MAXIMUM DESIGN PRESSURE RATING FOR 4'-0"X8'-0" SINGLE OR 8'-0"x8'-0" PAIR OF DOORS SHALL BE +70 psf, -70 psf AND SHALL ONLY BE USED WITH EITHER LAMINATED OR INSULATED GLASS. USE SEALANTS #37 AND #37A FOR THESE DOORS.

4. THIS PRODUCT WILL NOT REQUIRE A HURRICANE PROTECTION DEVICE.

5. THIS PRODUCT IS NOT APPROVED FOR WATER INFILTRATION.

6. PROVIDE 1/4" MAX. LOAD BEARING SHIM (TYP.), WHEN ALLOWED BY THIS DRAWING.

7. ALL SCREWS AND BOLTS (EXCEPT END RETENTION SCREW Ⓒ) INSTALLED AT SEAWARD AREAS TO BE STAINLESS STEEL 304 OR 316 AISI SERIES AND MEET ASTM A167, OR HOT DIPPED GALVANIZED (AFTER FABRICATION) CARBON STEEL AS PER ASTM A 123 OR ASTM A153, OR HOT DIPPED GALVANIZED OR GALVANNEALED (PRIOR TO FABRICATION) AND MEET ASTM A653 WITH 50 ksi YIELD STRENGTH AND 90 hsi TENSILE STRENGTH, PER 2006 TEXAS REVISIONS TO SECTION TO SECTION 1716.1.2 OF THE 2006 I.B.C AND SECTION R324.1.1 OF THE 2006 I.R.C.

   ALL SCREWS AND BOLTS (EXCEPT END RETENTION SCREW Ⓒ INSTALLED AT INLAND I AREAS TO BE STAINLESS STEEL 304 OR 316 AISI SERIES AND MEET ASTM A167, OR HOT SIPPED GALVANIZED (AFTER FABRICATION) CARBON STEEL AS PER ASTM A123 OR ASTM A153, OR HOT DIPPED GALVANIZED OR GALVANNEALED (PRIOR TO FABRICATION) AND MEET ASTM A653; HOT DIP GALVANIZED OR ELECTRO GALVANIZED PER ASTM A641, MECHANICALLY DEPOSITED ZINC COATING PER ASTM B695 OR ELECTRO DEPOSITED ZINC COATINGS PER ASTM BL33, PER THE 2006 TEXAS REVISIONS TO SECTION 1716.1.2 OF THE 2006 I.B.C AND TO SECTION R324.1.2 OF THE 2006 I.R.C.

8. WOOD BUCKS BY OTHERS, MUST BE ANCHORED PROPERLY TO TRANSFER LOADS TO THE BUILDING STRUCTURE. WOOD BUCKS MUST BE SOUTHERN PINE, G = 0.55.

9. REMAINING COMPONENTS FOR THIS PRODUCT SHALL BE AS INDICATED ON BILL OF MATERIALS, SHEETS 4 & 5 OF THIS DRAWING AND AT HARDWARE SCHEDULES ON SHEETS 6 & 7 OF THE DRAWING.

10. ALL ALUMINUM EXTRUSIONS IN CONTACT WITH STEEL, CONCRETE, GROUT FILLED CONCRETE BLOCK AND WOOD SHALL COMPLY WITH SECTION 6.7 OF THE ALUMINUM DESIGN MANUAL 2005 EDITION.

11. SHOP DRAWINGS PREPARED BASED ON THIS T.D.I REPORT AND TAKING INTO ACCOUNT THE SPECIFIC JOB CONDITIONS, SHALL BE SUBMITTED TO THE BUILDING OFFICIAL AS PART OF THE PERMIT DOCUMENTS.

12. SUBSTRATE MATERIAL NOTED ON THIS DRAWING AS EXISTING BY OTHERS, POURED CONCRETE, GROUT FILLED CONCRETE BLOCK AND WOOD MUST WITHSTAND THE LOADS IMPOSED BY THIS PRODUCT.

13. THIS PRODUCT'S INSTALLATION SHALL COMPLY WITH ALL SPECS INDICATED IN THIS DRAWING PLUS ANY BUILDING AND ZONING REGULATIONS PROVIDED BY THE JURISDICTION WHERE PERMIT IS APPLIED TO.

14. (a) THIS P.E.D. PREPARED BY THIS ENGINEER IS GENERIC AND DOES NOT PROVIDE INFORMATION FOR A SITE SPECIFIC PROJECT; i.e. WHERE THE SITE CONDITIONS DEVIATE FROM THE P.E.D.

    (b) CONTRACTOR TO BE RESPONSIBLE FOR THE SELECTION, PURCHASE AND INSTALLATION INCLUDING LIFE SAFETY OF THIS PRODUCT, BASED ON THIS P.E.D., PROVIDED HE/SHE DOES NOT DEVIATE FROM THE CONDITIONS DETAILED ON THIS DOCUMENT. CONSTRUCTION SAFETY AT SITE IS THE CONTRACTOR'S RESPONSIBILITY.

    (c) THIS P.E.D. WILL BE CONSIDERED INVALID IF ALTERED BY ANY MEANS.

    (d) SITE SPECIFIC PROJECTS SHALL BE PREPARED BY A PROFESSIONAL ENGINEER OR ARCHITECT WHICH WILL BECOME THE ENGINEER OF RECORD (E.O.R.) FOR THE PROJECT AND WHO WILL BE RESPONSIBLE FOR THE PROPER USE OF THE P.E.D. ENGINEER OF RECORD, ACTING AS A DELEGATED ENGINEER TO THE P.E.D. ENGINEER, SHALL SUBMIT TO THIS LATTER THE SITE SPECIFIC DRAWINGS FOR REVIEW.

    (e) ORIGINAL P.E.D. SHALL BEAR THE DATE AND ORIGINAL SEAL AND SIGNATURE OF THE PROFESSIONAL ENGINEER OF RECORD THAT PREPARED IT.

15. PRODUCT MANUFACTURE'S LABEL SHALL BE LOCATED ON A READILY VISIBLE LOCATION AT PRODUCT IN ACCORDANCE WITH TEXAS DEPARTMENT OF INSURANCE REQUIREMENTS. ONE LABEL SHALL BE PLACED FOR EVERY OPENING.

THIS DRAWING SHALL ONLY BE USED TO OBTAIN PERMITS UNDER THE TEXAS DEPARTMENT OF INSURANCE JURISDICTION

TEXAS DEPARTMENT OF INSURANCE - 2006

SERIES MSD-375 (MEDIUM) & WSD-500 (WIDE) STILE ALUMINUM ENTRANCE DOOR (WET GLAZED) LARGE & SMALL MISSILE IMPACT

DRAWN BY: F.R.L 10/16/14

DATE

14-075 DRAWING No

SHEET 1 OF 26

Oldcastle BuildingEnvelope
803 AIRPORT RD. TERRELL TX 75160
www.OldcastleBE.com-Phone 800-869-4567

REV. No	DESCRIPTION	DATE	REV. No	DESCRIPTION	DATE

WALTER A. TILLIT Jr P.E.
PROFESSIONAL ENGINEER
6355 N.W 36 STREET, STE. 305
VIRGINIA GARDENS, FL 33166
PHONE(305) 871-1530 FAX (305) 871-1531
TEXAS LIC. # 90691
FIRM REGISTRATION # F-13790

P.E. SEAL/SIGNATURE/DATE

SERIES MSD-375 & WSD-500 ALUMINUM MEDIUM & WIDE STILE ENTRANCE DOORS (WET GLAZED) COMPONENTS

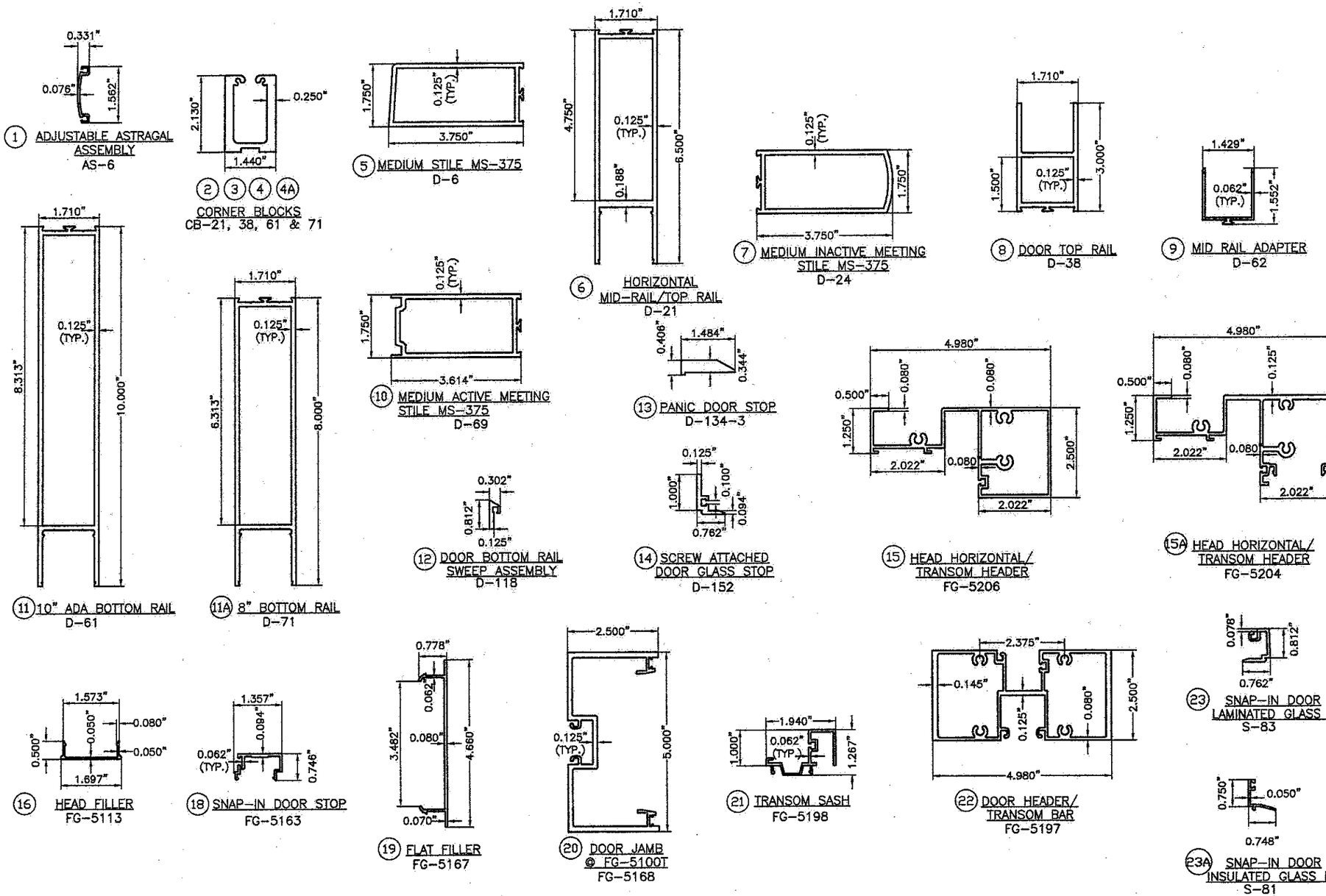

TEXAS DEPARTMENT OF INSURANCE - 2006

SERIES MSD-375 (MEDIUM) & WSD-500 (WIDE) STILE ALUMINUM ENTRANCE DOOR (WET GLAZED) LARGE & SMALL MISSILE IMPACT

Oldcastle BuildingEnvelope™
803 AIRPORT RD. TERRELL, TX 75160
www.OldcastleBE.com-Phone 800-869-4567

DRAWN BY:	DATE	DRAWING No	SHEET 2 OF 26
F.R.L 10/16/14		14-075	

REV. No	DATE	REV. No	DATE
DESCRIPTION		DESCRIPTION	

WALTER A. TILLIT Jr P.E.
PROFESSIONAL ENGINEER
6355 N.W 36 STREET, STE. 305
VIRGINIA GARDENS, FL 33166
PHONE(305) 871-1530 FAX (305) 871-1531
TEXAS LIC. # 90691
FIRM REGISTRATION # F-13790

STATE OF TEXAS
WALTER A. TILLIT Jr.
90691
LICENSED
PROFESSIONAL ENGINEER
10/16/14

P.E. SEAL/SIGNATURE/DATE

SERIES MSD-375 & WSD-500 ALUMINUM MEDIUM & WIDE STILE ENTRANCE DOORS (WET GLAZED) COMPONENTS

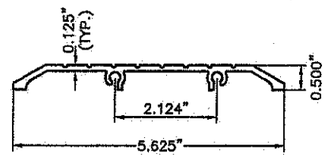

(24) THRESHOLD
TH-57

(25) DOOR STOP WEATHERING
D-125

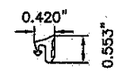

(26) I.G. DRY GLAZING GASKET
FG-1133

(26A) I.G. GLAZING GASKET
V-28

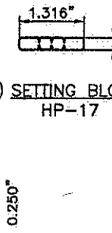

(36) SETTING BLOCK
HP-17

(35) SPACER GASKET
FG-5188

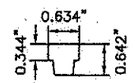

(36A) SETTING BLOCK
FG-5229

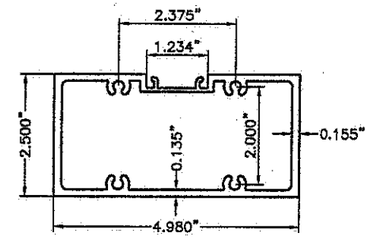

(42) DOOR HEADER-OFFSET ARM
FG-5172

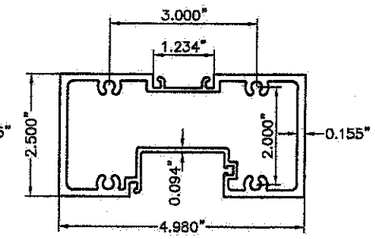

(42A) DOOR HEADER/TRANSOM BAR
FG-5235

(41) I.G. SETTING BLOCK
PP-1 FG-5000

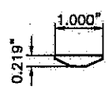

(41A) I.G. SETTING BLOCK
D-123

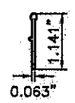

(45) DOOR SWEEP
D-120

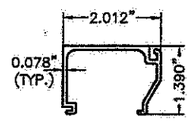

(47) GLASS STOP
FG-5190

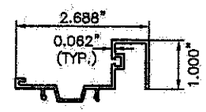

(50) TRANSOM SASH
FG-5181

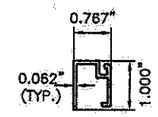

(52) TRANSOM GLASS STOP
FG-5182

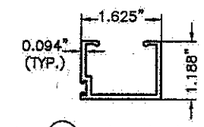

(53) DOOR STOP
DS-104

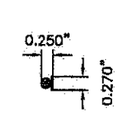

(56) BULB GASKET FOR FILLER
CW-998

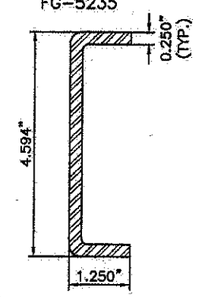

(57) DOOR JAMB STEEL REINFORCEMENT
FG-5000-PP-8

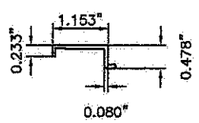

(60) ANCHOR PLATE
FG-5000-FP-17
8" LONG

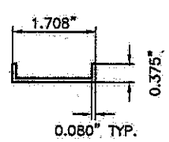

(62) ANCHOR PLATE
FG-5000-FP-19
8" LONG

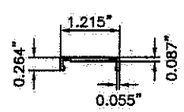

(63) ANCHOR PLATE
FG-5000-FP-20
8" LONG

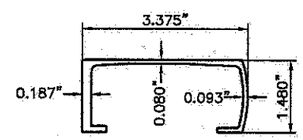

(64) STILE REINFORCEMENT SLEEVE
D-243-01
5.26" LONG

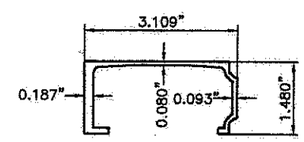

(65) STILE REINFORCEMENT SLEEVE
D-244-01
5.26" LONG

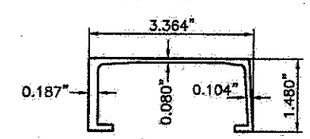

(66) STILE REINFORCEMENT SLEEVE
D-247-01
5.26" LONG

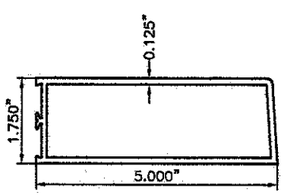

(67) WIDE STILE WS-500
D-13

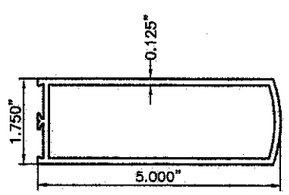

(68) INACTIVE MEETING WIDE STILE WS-500
D-25

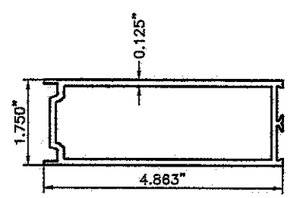

(69) ACTIVE MEETING WIDE STILE WS-500
D-70

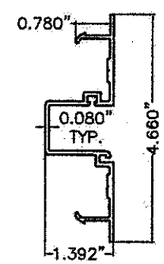

(70) POCKET FILLER FOR FG-5000
FG-5196

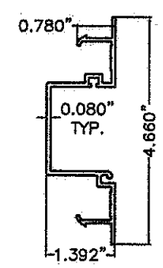

(71) POCKET FILLER FOR FG-5100
FG-5179

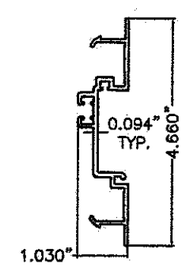

(72) POCKET FILLER FOR FG-5100T
FG-5217

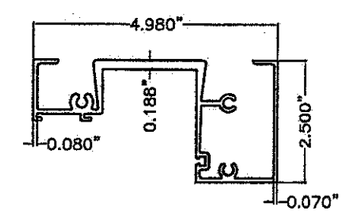

(73) HEAD/TRANSOM HEADER FOR FG-5100,FG-5100T
FG-5178

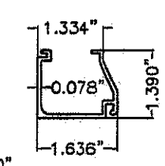

(74) GLASS STOP FOR FG-5100,FG-5100T
FG-5177

TEXAS DEPARTMENT OF INSURANCE - 2006

SERIES MSD-375 (MEDIUM) & WSD-500 (WIDE) STILE ALUMINUM ENTRANCE DOOR (WET GLAZED) LARGE & SMALL MISSILE IMPACT

DRAWN BY: F.R.L.
DATE: 10/16/14
DRAWING No: 14-075
SHEET 3 OF 26

Oldcastle BuildingEnvelope
803 AIRPORT RD. TERRELL TX 75160
www.OldcastleBE.com-Phone 800-869-4567

REV. No	DESCRIPTION	DATE	REV. No	DESCRIPTION	DATE

WALTER A. TILLIT Jr P.E.
PROFESSIONAL ENGINEER
6355 N.W 36 STREET, STE. 305
VIRGINIA GARDENS, FL 33166
PHONE(305) 871-1530 FAX (305) 871-1531
TEXAS LIC. # 90691
FIRM REGISTRATION # F-13790

STATE OF TEXAS
11/5/14
P.E. SEAL/SIGNATURE/DATE

BILL OF MATERIALS MSD-375 & WSD-500 DOORS

ITEM No.	PART NUMBER	DESCRIPTION	DIMENSIONS	MATERIAL	MANUFACTURER	NOTES
1.	AS-6	ADJUSTABLE ASTRAGAL ASSEMBLY	.331" X 1.562" X .076"	6063-T6 ALUMINUM	OBE	
2.	CB-21	CORNER BLOCK	2.130" X 1.44" X .25"	6063-T5 ALUMINUM	OBE	4.437" LONG
3.	CB-38	DOOR CORNER BLOCK	2.130" X 1.44" X .25"	6063-T5 ALUMINUM	OBE	1.23" LONG
4.	CB-61	DOOR CORNER BLOCK	2.130" X 1.44" X .25"	6063-T5 ALUMINUM	OBE	8" LONG
4A.	CB-71	DOOR CORNER BLOCK	2.130" X 1.44" X .25"	6063-T5 ALUMINUM	OBE	6" LONG
5.	D-6	MEDIUM STILE MS-375	3.75" X 1.75" X .125"	6063-T5 ALUMINUM	OBE	
6.	D-21	HORIZONTAL MID-RAIL/TOP RAIL	6.50" X 1.71" X .125"	6063-T5 ALUMINUM	OBE	
7.	D-24	INACTIVE MEETING MEDIUM STILE MS-375	3.75" X 1.75" X .125"	6063-T5 ALUMINUM	OBE	
8.	D-38	DOOR TOP RAIL	3.00" X 1.71" X .125"	6063-T5 ALUMINUM	OBE	
9.	D-62	MID-RAIL ADAPTER	1.429" X 1.552" X .062"	6063-T5 ALUMINUM	OBE	
10.	D-69	ACTIVE MEETING MEDIUM STILE MS-375	3.614" X 1.75" X .125"	6063-T5 ALUMINUM	OBE	
11.	D-61	10" ADA BOTTOM RAIL	10.00" X 1.71" X .125"	6063-T6 ALUMINUM	OBE	
11A.	D-71	8" BOTTOM RAIL	8.00" X 1.71" X .125"	6063-T6 ALUMINUM	OBE	
12.	D-118	DOOR BOTTOM RAIL SWEEP ASSEMBLY	.812" X .302" X .125"	6063-T5 ALUMINUM	OBE	CUT TO DOOR WIDTH MINUS 5/8"
13.	D-134-3	PANIC DOOR STOP	.344" X 1.484" X 3.00"	6063-T5 ALUMINUM	OBE	
14.	D-152	SCREW ATTACHED DOOR GLASS STOP	1.00" X .762" X .125"	6063-T6 ALUMINUM	OBE	ATTACH W/ (30) 12" ON CENTER
15.	FG-5206	HEAD HORIZONTAL/TRANSOM HEADER	2.50" X 4.98" X .080"	6063-T6 ALUMINUM	OBE	FOR FG-5000 SYSTEMS
15A.	FG-5204	HEAD HORIZONTAL/TRANSOM HEADER	2.50" X 4.98" X .080"	6063-T6 ALUMINUM	OBE	FOR FG-5000 SYSTEMS
16.	FG-5113	HEAD FILLER	.50" X 1.69" X .050"	6063-T5 ALUMINUM	OBE	
18.	FG-5163	SNAP-IN DOOR STOP	.746" X 1.357" X .062"	6063-T6 ALUMINUM	OBE	
19.	FG-5167	FLAT FILLER	.778" X 4.66" X .080"	6063-T6 ALUMINUM	OBE	RUNS FULL LENGTH
20.	FG-5168	DOOR JAMB @ FG-5000, FG-5100 & FG-5100T	2.50" X 5.00" X .125"	6063-T6 ALUMINUM	OBE	
21.	FG-5198	TRANSOM SASH	1.00" X 1.940" X .062"	6063-T6 ALUMINUM	OBE	
22.	FG-5197	DOOR HEADER/TRANSOM BAR	2.50" X 4.90" X .080"	6063-T6 ALUMINUM	OBE	
23.	S-83	SNAP-IN DOOR LAMINATED GLASS STOP	.812" X .762" X .078"	6063-T6 ALUMINUM	OBE	
23A.	S-81	SNAP-IN DOOR INSULATED GLASS STOP	.748" X .75" X .050"	6063-T5 ALUMINUM	OBE	
24.	TH-57	THRESHOLD	.50" X 5.625" X .125"	6063-T5 ALUMINUM	OBE	
25.	D-125	DOOR STOP WEATHERING	.125" SPACE	SANTOPRENE	UNIVERSAL RUBBER	
26.	FG-1133	GLAZING GASKET	.197" SPACE	EPDM	VARIES	70 DUROMETER, USE AT LAMINATED GLASS
26A.	V-28	GLAZING GASKET	.30" X .282"	VINYL	OBE	USE AT INSULATED GLASS
27.	FS-2	ATTACH D-118 SWEEP TO DOOR BOTTOM	#8 X 3/8" PPHSMS	STEEL	VARIES	
28.	FS-7	ATTACH RAILS TO CORNER BLOCKS	#10 X 3/4" PFH	STEEL	VARIES	
29.	FS-8	SPLINE ASSEMBLY SCREW	#14 X 1" HHSTS	STEEL	VARIES	
30.	FS-114	ATTACH D-152 TO DOOR	#8 X 3/8" PPHSMS	STEEL	VARIES	SPACED @ 12" O.C.
31.	SM-5601	JOINT SEALANT TAPE	.125" X .50" VARIES	BUTYL	SCHNEE-MOREHEAD	
32.	WP-085	ADJUSTABLE ASTRAGAL WEATHERING	VARIABLE SPACE	WOOL PILE	SCHLEGEL	
33.	FS-56	ATTACH D-134-2 PANIC STOP	#12 X 3/4" PFHSMS	STEEL	VARIES	
34.	FS-49	ADJUSTABLE ASTRAGAL SCREW	#8 X 1/2" PPHSMS	STEEL	VARIES	
35.	FG-5188	SPACER GASKET	.25" X .25"	EPDM	VARIES	85 DUROMETER
36.	HP-17	SETTING BLOCK	1.316" X .25" X 4" LONG	EPDM	VARIES	90 DUROMETER
36A.	FG-5229	SETTING BLOCK	.634" X .642" X 4" LONG	EPDM	VARIES	85 DUROMETER

TEXAS DEPARTMENT OF INSURANCE - 2006

SERIES MSD-375 (MEDIUM) & WSD-500 (WIDE)
STILE ALUMINUM ENTRANCE DOOR (WET GLAZED)
LARGE & SMALL MISSILE IMPACT

DRAWN BY: F.R.L.
DATE 10/16/14

Oldcastle BuildingEnvelope™
803 AIRPORT RD. TERRELL, TX 75160
www.OldcastleBE.com-Phone 800-869-4567

14-075
DRAWING No

SHEET 4 OF 26

REV. No.	DESCRIPTION	DATE	REV. No.	DESCRIPTION	DATE

WALTER A. TILLIT Jr P.E.
PROFESSIONAL ENGINEER
6355 N.W. 36 STREET, STE. 305
VIRGINIA GARDENS, FL 33166
PHONE(305) 871-1530 FAX (305) 871-1531
TEXAS LIC. # 90691
FIRM REGISTRATION # F-13790

STATE OF TEXAS
WALTER A. TILLIT JR.
11/5/14

P.E. SEAL/SIGNATURE/DATE

BILL OF MATERIALS MSD-375 & WSD-500 DOORS (CONTINUED)

ITEM No.	PART NUMBER	DESCRIPTION	DIMENSIONS	MATERIAL	MANUFACTURER	NOTES
37.	995 SEALANT	STRUCTURAL SILICONE	FILL SPACE	SILICONE	DOW CORNING 995	USE FOR UP TO +70, -80 psf. ASD PRESSURE RATING
37A.	SEALANT	STRUCTURAL SILICONE PROGLAZE II	FILL SPACE	SILICONE	TREMCO	USE FOR UP TO +70, -70 psf. ASD PRESSURE RATING
38.	921	USED AS PERIMETER SEALANT	FILL SPACE	POLYURETHANE	VULKEM	
40.	FS-39	ATTACH CORNER BLOCK TO STILES	¼" X 20 X ¾"; HHMS	STEEL	VARIES	
41.	FG-5000-PP1	SETTING BLOCK	⅛" X ¾" X 4"	EPDM	VARIES	USE FOR LAMINATED GLASS
41A.	D-123	SETTING BLOCK	1.00" X 0.219"	RIGID PVC	VARIES	USE FOR INSULATED GLASS
42.	FG-5172	DOOR HEADER-OFFSET ARM	2.50" X 4.98" X .135"	6063-T6 ALUMINUM	OBE	
42A.	FG-5235	DOOR HEADER/TRANSOM BAR	2.50" X 4.98" X .135"	6063-T6 ALUMINUM	OBE	
43.	DS-104	OFFSET ARM COVER	1.188" X 1.625" X .094"	6063-T6 ALUMINUM	OBE	
44.	FASTENER	ATTACH DS-104 TO FG-5172	#10 X 2" FHPSMS	STEEL	VARIES	SINGLE DOOR: 1 EA. 6" FROM LOCK STILE PAIR OF DRS: 1 EA. 6" EACH SIDE OF DR C/L
45.	D-120	DOOR WEATHERING STRIP	VARIABLE SPACE	VINYL	OBE	DOOR WIDTH MINUS 5/8"
46.	FG-5185	SPACER GASKET	.25" X .25"	SILICONE	VARIES	
47.	FG-5190	GLASS STOP	2.01" X 1.39" X .080"	6063-T6 ALUMINUM	OBE	FOR FG-5000 SYSTEMS
50.	FG-5181	TRANSOM SASH	1.00" X 2.69" X .062"	6063-T5 ALUMINUM	OBE	
51.	FS-55	ATTACH SC-1 CLIP	#10 X 1/2" PH ROUND	STEEL	VARIES	9" O.C.
52.	FG-5182	TRANSOM GLASS STOP	1.00" X .767" X .062"	6063-T5 ALUMINUM	OBE	
53.	DS-104	DOOR STOP	1.625" X 1.188" X .094"	6063-T5 ALUMINUM	OBE	USES SC-1 CLIP
56.	CW-998	BULB GASKET FOR FILLER	VARIES	FOAM-TITE	AMESBURY	
57.	FG-5000-PP-8	DOOR JAMB MULLION STL REINFORCING	1 1/4" X 4 9/16" X 1/4"	A-36 STEEL(ZINC PLATED)	VARIES	FULL LENGTH OF MULLION. COAT RICH PRIMER
58.	FS-38	ATTACH STL. REINFORCEMENT	1/4"-20 X 1/2" HH TYPE "F"	STEEL	VARIES	
59.	SC-1	STAINLESS STEEL CLIP	.281" X .968" X .032"	STAINLESS STEEL	OBE	9" O.C.
60.	FG-5000-FP-17	ANCHOR PLATE	1.153" X .478" X .080"X 8" LONG	6063-T5 ALUMINUM	OBE	USED @ 22
62.	FG-5000-FP-19	ANCHOR PLATE	1.708" X .375" X .080"X 8" LONG	6063-T5 ALUMINUM	OBE	USED @ 24
63.	FG-5000-FP-20	ANCHOR PLATE	1.215" X .264" X .078"X 8" LONG	6063-T5 ALUMINUM	OBE	USED @ 42
64.	D-243-01	STILE REINFORCEMENT SLEEVE	3.375" X 1.480" X .093"X 5.26LG	6063-T6 ALUMINUM	OBE	USED AT DOOR STILE SILL WITH REGENT HARDWARE
65.	D-244-01	STILE REINFORCEMENT SLEEVE	3.109" X 1.480" X .093"X 5.26LG	6063-T6 ALUMINUM	OBE	USED AT DOOR STILE SILL WITH REGENT HARDWARE
66.	D-247-01	STILE REINFORCEMENT SLEEVE	3.364" X 1.480" X .104"X 5.26LG	6063-T6 ALUMINUM	OBE	USED AT DOOR STILE SILL WITH REGENT HARDWARE
67.	D-13	WIDE STILE WS-500	5.000" X 1.75" X .125"	6063-T5	OBE	
68.	D-25	INACTIVE MEETING WIDE STILE WS-500	5.000" X 1.75" X .125"	6063-T5	OBE	
69.	D-70	ACTIVE MEETING WIDE STILE WS-500	4.863" X 1.75" X .125"	6063-T5	OBE	
70.	FG-5196	POCKET FILLER FOR FG-5000	4.660" X 1.392" X .080"	6063-T5	OBE	
71.	FG-5179	POCKET FILLER FOR FG-5100	4.660" X 1.392" X .080"	6063-T5	OBE	
72.	FG-5217	POCKET FILLER FOR FG-5100T	4.660" X 1.030" X .094"	6063-T5	OBE	
73.	FG-5178	HEAD/TRANSOM HEADER	2.500" X 4.980" X VARIES	6063-T6 ALUMINUM	OBE	FOR FG-5100,FG-5100T SYSTEMS
74.	FG-5177	GLASS STOP	1.390" X 1.636" X .078"	6063-T6 ALUMINUM	OBE	FOR FG-5100,FG-5100T SYSTEMS

TEXAS DEPARTMENT OF INSURANCE - 2006

SERIES MSD-375 (MEDIUM) & WSD-500 (WIDE)
STILE ALUMINUM ENTRANCE DOOR (WET GLAZED)
LARGE & SMALL MISSILE IMPACT

DRAWN BY: F.R.L
DATE 10/16/14
DRAWING No 14-075
SHEET 5 OF 28

Oldcastle BuildingEnvelope
803 AIRPORT RD. TERRELL TX 75160
www.OldcastleBEI.com-Phone 800-869-4567

REV. No.	DESCRIPTION	DATE	REV. No.	DESCRIPTION	DATE

WALTER A. TILLIT Jr P.E.
PROFESSIONAL ENGINEER
6355 N.W. 36 STREET, STE. 305
VIRGINIA GARDENS, FL 33166
PHONE(305) 871-1530 FAX (305) 871-1531
TEXAS LIC. # 90691
FIRM REGISTRATION # F-13790

P.E. SEAL/SIGNATURE/DATE

HARDWARE SCHEDULE 3'-6" X 8'-0" OR 4'-0" X 8'-0" (Max.) SINGLE MSD-375 & WSD-500 DOORS

HARDWARE TYPE	HARDWARE MODEL AND DESCRIPTION	MANUFACTURER	MAX. DESIGN PRESSURE	MAX. DOOR SIZE	NOTES
3-POINT LOCK	MS 1850 DEADLOCK	ADAMS RITE	+70 / -80 PSF	3'-6" X 8'-0"	
3-POINT LOCK	MS 1850S + 4015 + 4016 DEADLOCK	ADAMS RITE	+70 / -70 PSF	4'-0" X 8'-0"	
RIM PANIC	ED4200S RIM PANIC	CORBIN RUSSWIN	+60 / -60 PSF	3'-6" X 8'-0"	
CONCEALED PANIC	1285 CONCEALED VERTICAL ROD PANIC	JACKSON	+70 / -80 PSF	3'-6" X 8'-0"	
CONCEALED PANIC	2086 CONCEALED VERTICAL ROD PANIC	JACKSON	+70 / -80 PSF	3'-6" X 8'-0"	
CONCEALED PANIC	5770 CONCEALED VERTICAL ROD PANIC	REGENT	+70 / -80 PSF	3'-6" X 8'-0"	ONLY ALLOWED TO USED FOR MEDIUM STILES 5, 7 & 10
CONCEALED PANIC	8410 CONCEALED VERTICAL ROD PANIC	SARGENT	+70 / -80 PSF	3'-6" X 8'-0"	OPTION FOR 4' X 8' ALLOWED UP TO +70 / -70 psf
RIM PANIC	AD8500 RIM PANIC	SARGENT	+60 / -60 PSF	3'-6" X 8'-0"	
SURFACE PANIC	9927 SURFACE PANIC VERTICAL ROD	VON DUPRIN	+70 / -80 PSF	3'-6" X 8'-0"	
CONCEALED PANIC	9947 CONCEALED PANIC VERTICAL ROD	VON DUPRIN	+70 / -80 PSF	3'-6" X 8'-0"	
SURFACE CLOSER	MODEL VARIES BY MANUFACTURER	VARIES	N/A	N/A	
CONCEALED CLOSER	21-211 HVY DUTY W/OFFSET SWING ARM	JACKSON	N/A	N/A	
BUTT HINGES 4" X 4 1/2"	4001 BALL BEARING STAINLESS STEEL	REGENT	+70 / -80 PSF	3'-6" X 8'-0"	(3) PER DOOR LEAF
BUTT HINGES 4" X 4 1/2"	BB1199 BALL BEARING STAINLESS STEEL	HAGER	+70 / -70 PSF	4'-0" X 8'-0"	(4) PER DOOR LEAF
BUTT HINGES 4" X 4 1/2"	RCTA2314 BALL BEARING STAINLESS	MC KINNEY	+60 / -60 PSF	3'-6" X 8'-0"	(3) PER DOOR LEAF
PULL HANDLES	PH-20 FORMED ALUMINUM	OBE	N/A	N/A	
PUSH BARS	PB-21 FORMED ALUMINUM	OBE	N/A	N/A	
CYLINDER	CY-1 LOCK CYLINDER	OBE	N/A	N/A	
KEY CONTROL	106 KEY CONTROL FOR SARGENT	SARGENT	N/A	N/A	
THUMB TURN	CY-3	OBE	N/A	N/A	
CYLINDER	CY-5 FOR VON DUPRIN DEVICES	OBE	N/A	N/A	
LOCK INDICATOR	AR-4089 OPTIONAL DEVICE	ADAMS RITE	N/A	N/A	
PANIC STOP	D-134-2 LOCATED AT THRESHOLD	OBE	N/A	N/A	
THRESHOLD	TH-57 COMPONENT 24	OBE	+70 / -80 PSF	3'-6" X 8'-0"	OPTION FOR 4' X 8' ALLOWED UP TO +70 / -70 psf
DOOR BOTTOM SWEEP	D-118 / D120	OBE	N/A	N/A	
TOP PIVOTS	OP-6 / OP-7	OBE	+70 / -80 PSF	3'-6" X 8'-0"	
INTERMEDIATE PIVOTS	M-19	RIXON	+70 / -80 PSF	3'-6" X 8'-0"	
BOTTOM PIVOTS	OP-9 / OP-10	OBE	+70 / -80 PSF	3'-6" X 8'-0"	
CONT. GEAR HINGE	780-224 HD CONTINUOUS GEAR HINGES	ROTON	+70 / -80 PSF	3'-6" X 8'-0"	
THRESHOLD	TH-43	OBE	+70 / -80 PSF	3'-6" X 8'-0"	
CONT. GEAR HINGE	KCFM-95HD1 CONTINUOUS GEAR HINGES	PEMKO	+70 / -70 PSF	4'-0" X 8'-0"	

TEXAS DEPARTMENT OF INSURANCE - 2006

SERIES MSD-375 (MEDIUM) & WSD-500 (WIDE)
STILE ALUMINUM ENTRANCE DOOR (WET GLAZED)
LARGE & SMALL MISSILE IMPACT

DRAWN BY: F.R.L.
DATE 10/16/14

Oldcastle BuildingEnvelope
803 AIRPORT RD. TERRELL, TX 75160
www.OldcastleBE.com-Phone 800-869-4567

14-075
DRAWING No

SHEET 6 OF 26

REV. No.	DESCRIPTION	DATE	REV. No.	DESCRIPTION	DATE

WALTER A. TILLIT Jr P.E.
PROFESSIONAL ENGINEER
6355 N.W. 36 STREET, STE. 305
VIRGINIA GARDENS, FL 33166
PHONE(305) 871-1530 FAX (305) 871-1531
TEXAS LIC. # 90691
FIRM REGISTRATION # F-13790

STATE OF TEXAS
11/5/14
P.E. SEAL/SIGNATURE/DATE

HARDWARE SCHEDULE 7'-0" X 8'-0" OR 8'-0" X 8'-0" (Max.) PAIRS MSD-375 & WSD-500 DOORS

HARDWARE TYPE	HARDWARE MODEL AND DESCRIPTION	MANUFACTURER	MAX. DESIGN PRESSURE	MAX. DOOR SIZE	NOTES
3-POINT LOCK	MS 1850 DEADLOCK	ADAMS RITE	+70 / -80 PSF	7'-0" X 8'-0"	ACTIVE DOOR
FLUSH BOLTS	FB-1201-VRM TOP & BOTTOM-STEEL TIPS	OBE	+70 / -80 PSF	7'-0" X 8'-0"	INACTIVE DOOR
3-POINT LOCK	MS 1850S + 4015 + 4016 DEADLOCK	ADAMS RITE	+70 / -70 PSF	8'-0" X 8'-0"	ACTIVE DOOR
2-POINT LOCK	MS 2180 AUTO RELEASE FLUSH BOLT	ADAMS RITE	+70 / -70 PSF	8'-0" X 8'-0"	INACTIVE DOOR
RIM PANIC	ED4200S RIM PANIC	CORBIN RUSSWIN	+60 / -60 PSF	7'-0" X 8'-0"	
REMOVABLE MULLION	WS708AKM REMOVABLE MULLION	CORBIN RUSSWIN	+60 / -60 PSF	7'-0" X 8'-0"	TO BE USED WITH ED4200S RIM DEVICE EXCLUSIVELY
CONCEALED PANIC	1285 CONCEALED VERTICAL ROD PANIC	JACKSON	+70 / -80 PSF	7'-0" X 8'-0"	
CONCEALED PANIC	2086 CONCEALED VERTICAL ROD PANIC	JACKSON	+70 / -80 PSF	7'-0" X 8'-0"	
CONCEALED PANIC	5770 CONCEALED VERTICAL ROD PANIC	REGENT	+70 / -80 PSF	7'-0" X 8'-0"	ONLY ALLOWED TO USED FOR MEDIUM STILES 5, 7 & 10
CONCEALED PANIC	8410 CONCEALED VERTICAL ROD PANIC	SARGENT	+70 / -80 PSF	7'-0" X 8'-0"	OPTION FOR 8' X 8' ALLOWED UP TO +70 / -70 psf
RIM PANIC	AD8500 RIM PANIC	SARGENT	+60 / -60 PSF	7'-0" X 8'-0"	
REMOVABLE MULLION	HC L980 REMOVABLE MULLION	CORBIN RUSSWIN	+60 / -60 PSF	7'-0" X 8'-0"	TO BE USED WITH AD8500 RIM DEVICE EXCLUSIVELY
SURFACE PANIC	9927 SURFACE PANIC VERTICAL ROD	VON DUPRIN	+70 / -80 PSF	7'-0" X 8'-0"	
CONCEALED PANIC	9947 CONCEALED PANIC VERTICAL ROD	VON DUPRIN	+70 / -80 PSF	7'-0" X 8'-0"	
SURFACE CLOSER	MODEL VARIES BY MANUFACTURER	VARIES	N/A	N/A	
CONCEALED CLOSER	21-211 HVY DUTY W/OFFSET SWING ARM	JACKSON	N/A	N/A	
BUTT HINGES 4" X 4 1/2"	4001 BALL BEARING STAINLESS STEEL	REGENT	+70 / -80 PSF	7'-0" X 8'-0"	(3) PER DOOR LEAF
BUTT HINGES 4" X 4 1/2"	BB1199 BALL BEARING STAINLESS STEEL	HAGER	+70 / -70 PSF	8' X 8'	(4) PER DOOR LEAF
BUTT HINGES 4" X 4 1/2"	RCTA2314 BALL BEARING STAINLESS	MC KINNEY	+60 / -60 PSF	3'-6" X 8'-0"	(3) PER DOOR LEAF
PULL HANDLES	PH-20 FORMED ALUMINUM	OBE	N/A	N/A	
PUSH BARS	PB-21 FORMED ALUMINUM	OBE	N/A	N/A	
CYLINDER	CY-1 LOCK CYLINDER	OBE	N/A	N/A	
KEY CONTROL	106 KEY CONTROL FOR SARGENT	SARGENT	N/A	N/A	
THUMB TURN	CY-3	OBE	N/A	N/A	
CYLINDER	CY-5 FOR VON DUPRIN DEVICES	OBE	N/A	N/A	
LOCK INDICATOR	AR-4089 OPTIONAL DEVICE	ADAMS RITE	N/A	N/A	
PANIC STOP	D-134-2 LOCATED AT THRESHOLD	OBE	N/A	N/A	
THRESHOLD	TH-57 COMPONENT 24	OBE	+70 / -80 PSF	7'-0" X 8'-0"	OPTION FOR 4' X 8' ALLOWED UP TO +70 / -70 psf
DOOR BOTTOM SWEEP	D-118 / D120	OBE	N/A	N/A	
TOP PIVOTS	OP-6 / OP-7	OBE	+70 / -80 PSF	7'-0" X 8'-0"	
INTERMEDIATE PIVOTS	M-19	RIXON	+70 / -80 PSF	7'-0" X 8'-0"	
BOTTOM PIVOTS	OP-9 / OP-10	OBE	+70 / -80 PSF	7'-0" X 8'-0"	
CONT. GEAR HINGE	780-224 HD CONTINUOUS GEAR HINGES	ROTON	+70 / -80 PSF	7'-0" X 8'-0"	
THRESHOLD	TH-43	OBE	+70 / -80 PSF	7'-0" X 8'-0"	
CONT. GEAR HINGE	KCFM-95HD1 CONTINUOUS GEAR HINGES	PEMKO	+70 / -70 PSF	8'-0" X 8'-0"	

TEXAS DEPARTMENT OF INSURANCE - 2006

SERIES MSD-375 (MEDIUM) & WSD-500 (WIDE)
STILE ALUMINUM ENTRANCE DOOR (WET GLAZED)
LARGE & SMALL MISSILE IMPACT

DRAWN BY: F.R.L
10/16/14
DATE

14-075
DRAWING No

Oldcastle BuildingEnvelope
803 AIRPORT RD. TERRELL TX 75160
www.OldcastleBE.com-Phone 800-869-6567

REV. No	DESCRIPTION	DATE	REV. No	DESCRIPTION	DATE

SHEET 7 OF 26

WALTER A. TILLIT Jr P.E.
PROFESSIONAL ENGINEER
6355 N.W 36 STREET, STE. 305
VIRGINIA GARDENS, FL 33166
PHONE(305) 871-1530 FAX (305) 871-1531
TEXAS LIC. # 90691
FIRM REGISTRATION # F-13790

STATE OF TEXAS
WALTER A. TILLIT JR.
90691
LICENSED
11/5/14

P.E. SEAL/SIGNATURE/DATE

REMOVABLE MULLION ASSEMBLY DETAILS FOR SARGENT & CORBIN RUSSWIN EXIT DEVICES: MAX. DESIGN PRESSURE RATING IS +60, −60 psf. FOR THESE EXIT DEVICES TO BE USED ONLY AT 3'−6"x8'−0" SINGLE OR 7'−0"x8'−0" PAIR OF DOORS

SARGENT HC L980 REMOVABLE MULLION OR CORBIN RUSSWIN KRM 200 FWS REMOVABLE MULLION

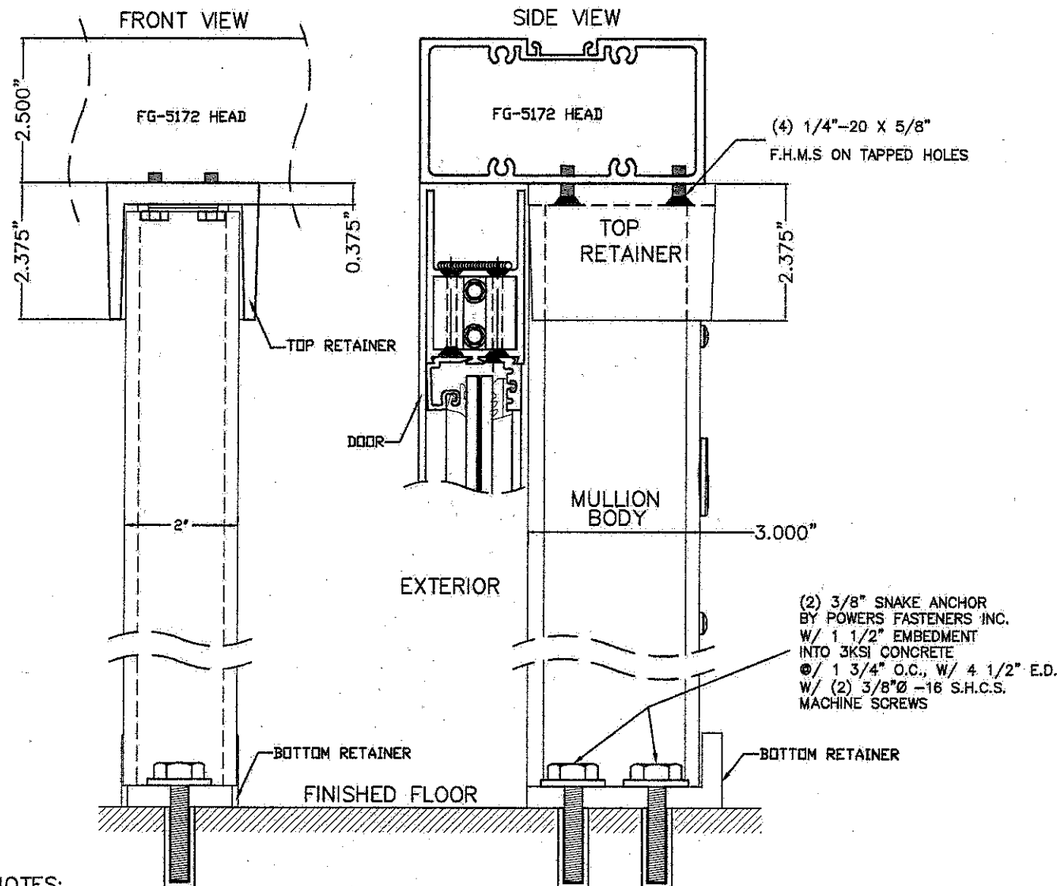

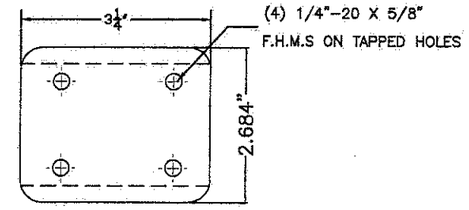

BOTTOM VIEW OF TOP RETAINER

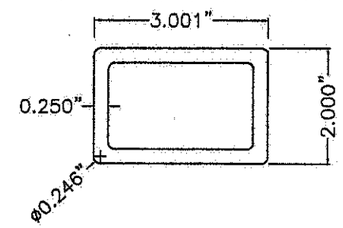

REMOVABLE MULLIONS HC-L980HC & KRM 200 FWS

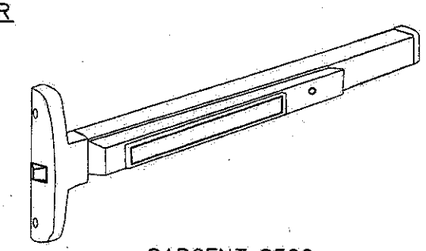

SARGENT 8500 NARROW RIM EXIT FBC APPROVED

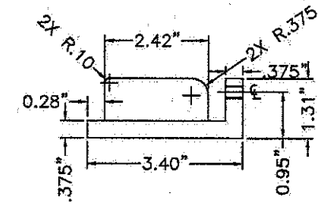

BOTTOM RETAINER SIDE VIEW

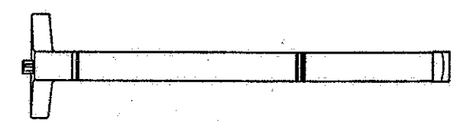

CORBIN RUSSWIN ED4200S NARROW EXIT FBC APPROVED

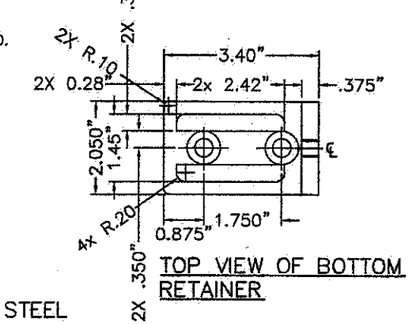

TOP VIEW OF BOTTOM RETAINER

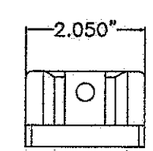

FRONT VIEW

NOTES:
1. FRACTIONAL DIMENSION TOLERANCE 1/64".
2. OUTSIDE DIMENSIONS ARE MAX PART SIZE.
3. MOUNTING HOLES TO BE PREPARED AT INSTALLATION.

MATERIALS:
MULLION BODY – CARBON STEEL HOT ROLLED, WELDED SEAM PER ASTM A500 GRADE B
FINISH: PRIME COAT RED PAINT
TOP & BOTTOM RETAINER – CAST IRON, PRIMED.

TEXAS DEPARTMENT OF INSURANCE – 2006

SERIES MSD-375 (MEDIUM) & WSD-500 (WIDE) STILE ALUMINUM ENTRANCE DOOR (WET GLAZED) LARGE & SMALL MISSILE IMPACT

DRAWN BY: F.R.L. DATE 10/16/14 DRAWING No 14-075 SHEET 8 OF 26

Oldcastle BuildingEnvelope™
803 AIRPORT RD. TERRELL, TX 75160
www.OldcastleBE.com-Phone 800-869-4567

REV. No	DESCRIPTION	DATE	REV. No	DESCRIPTION	DATE

WALTER A. TILLIT Jr P.E.
PROFESSIONAL ENGINEER
6355 N.W 36 STREET, STE. 305
VIRGINIA GARDENS, FL 33166
PHONE(305) 871-1530 FAX (305) 871-1531
TEXAS LIC. # 90691
FIRM REGISTRATION # F-13790

STATE OF TEXAS — WALTER A. TILLIT JR. — 90691 — 10/15/14 — P.E. SEAL/SIGNATURE/DATE

TYPICAL GLAZING DETAILS AT DOORS

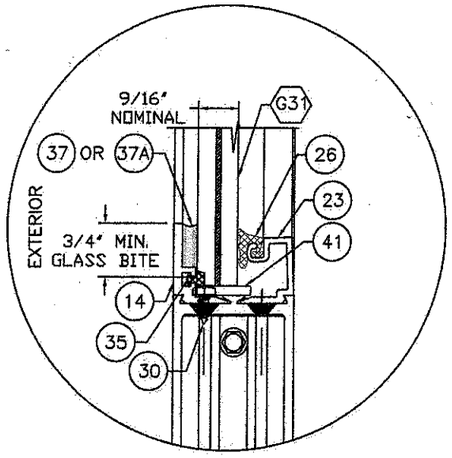

GLASS TYPE G31

SCALE: 6" = 1"

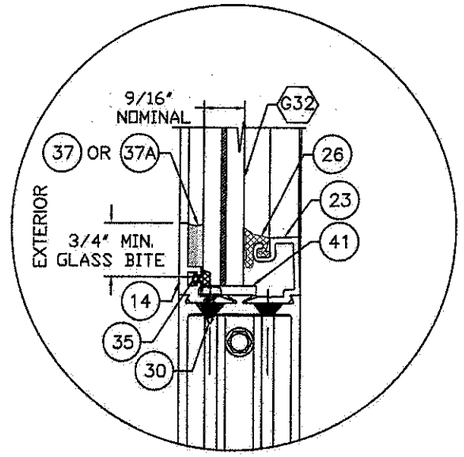

GLASS TYPE G32

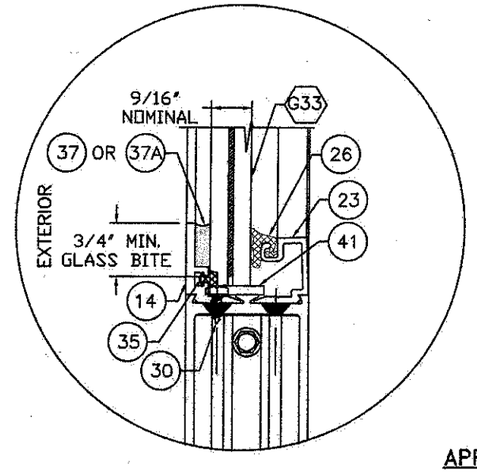

GLASS TYPE G33

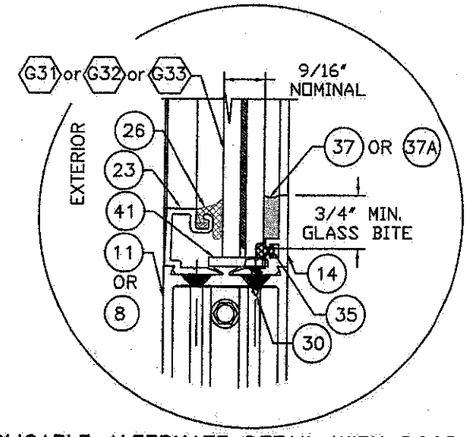

APPLICABLE ALTERNATE DETAIL WITH DOOR GLASS STOPS REVERSED FOR ALL GLASS TYPES VALID ONLY FOR 3'-6"x7'-0" OR 7'-0"x7'-0" SINGLE/PAIR OF DOORS RESPECTIVELY

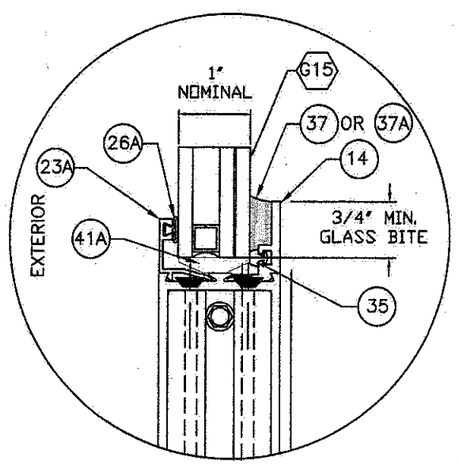

GLASS TYPE G15

GLASS SCHEDULE FOR 3'-6"x8'-0" OR 7'-0"x8'-0" DOORS ✳

GLASS LABEL	GLASS COMPOSITION	INTERLAYER MANUFACTURER NAME	MAXIMUM D.L.O.	MAX. DESIGN PRESSURE RATING FOR GLASS (P.S.F) W/ 37 SILICONE	MAX. DESIGN PRESSURE RATING FOR GLASS (P.S.F) W/ 37A SILICONE
G31	9/16" NOMINAL THICKNESS LAMINATED GLASS CONSISTING OF TWO 1/4" H.S. GLASS, AND A 0.090" SAFLEX PVB INTERLAYER	EASTMAN CHEMICAL COMPANY	32 5/16" x 82 3/16"	+70, -80	+70, -70
G32	9/16" NOMINAL THICKNESS LAMINATED GLASS CONSISTING OF TWO 1/4" H.S. GLASS, AND A 0.100" SAFLEX PVB INTERLAYER	EASTMAN CHEMICAL COMPANY		+70, -80	+70, -70
G33	9/16" NOMINAL THICKNESS LAMINATED GLASS CONSISTING OF TWO 1/4" H.S. GLASS, AND A 0.075" SAFLEX C.P. STORM GLASS INTERLAYER	EASTMAN CHEMICAL COMPANY		+70, -80	+70, -70
G15	1" NOMINAL THICKNESS INSULATED GLASS CONSISTING OF 3/16" TEMPERED GLASS OB , 5/16" SPACER & 3/16" H.S. GLASS OVER 0.075" SAFLEX C.P. STORM GLASS INTERLAYER OVER 3/16" H.S. GLASS	EASTMAN CHEMICAL COMPANY		+70, -70	+70, -70

TYPICAL DOOR GLASS SIZE= DLO +1 1/2"

✳ SEE SHEET 1, GENERAL NOTE #3, FOR MAX. PRESSURE RATING WHEN SPECIFIC HADWARE IS USED.

GLASS SCHEDULE FOR 4'-0"x8'-0" OR 8'-0"x8'-0" DOORS

GLASS LABEL	GLASS COMPOSITION	INTERLAYER MANUFACTURER NAME	MAXIMUM D.L.O.	MAX. DESIGN PRESSURE RATING FOR GLASS (P.S.F) W/ 37 OR 37A SILICONE
G33	9/16" NOMINAL THICKNESS LAMINATED GLASS CONSISTING OF TWO 1/4" H.S. GLASS, AND A 0.075" SAFLEX C.P. STORM GLASS INTERLAYER	EASTMAN CHEMICAL COMPANY	38 3/4" x 82 9/16"	+70, -70
G15	1" NOMINAL THICKNESS INSULATED GLASS CONSISTING OF 3/16" TEMPERED GLASS OB , 5/16" SPACER & 3/16" H.S. GLASS OVER 0.075" SAFLEX C.P. STORM GLASS INTERLAYER OVER 3/16" H.S. GLASS	EASTMAN CHEMICAL COMPANY		+70, -70

TEXAS DEPARTMENT OF INSURANCE - 2006

SERIES MSD-375 (MEDIUM) & WSD-500 (WIDE) STILE ALUMINUM ENTRANCE DOOR (WET GLAZED) LARGE & SMALL MISSILE IMPACT

DRAWN BY: F.R.L 10/16/14 — DATE

14-075 DRAWING No

SHEET 9 OF 26

Oldcastle BuildingEnvelope™
800 AIRPORT RD. TERRELL TX 75160
www.OldcastleBE.com-Phone 800-869-4567

WALTER A. TILLIT Jr P.E.
PROFESSIONAL ENGINEER
6355 N.W 36 STREET, STE. 305
VIRGINIA GARDENS, FL 33166
PHONE(305) 871-1530 FAX (305) 871-1531
TEXAS LIC. # 90691
FIRM REGISTRATION # F-13790

REV. No	DESCRIPTION	DATE	REV. No	DESCRIPTION	DATE

P.E. SEAL/SIGNATURE/DATE

TYPICAL GLAZING DETAILS FOR TRANSOMS

VALID ONLY FOR 3'-6"x8'-0" & 7'-0"x8'-0" SINGLE/PAIR OF DOORS RESPECTIVELY

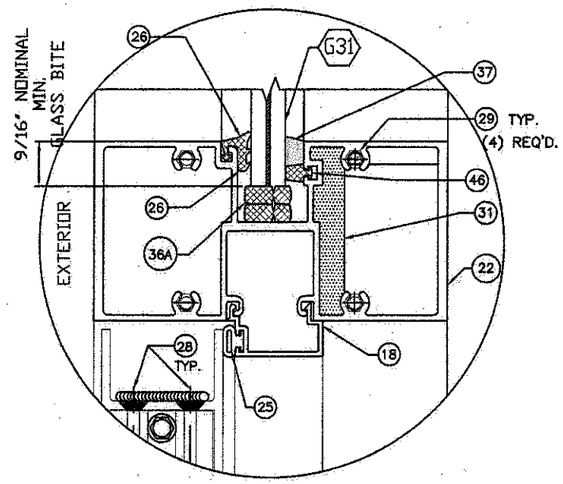

GLASS TYPE G31

SCALE: 6" = 1"

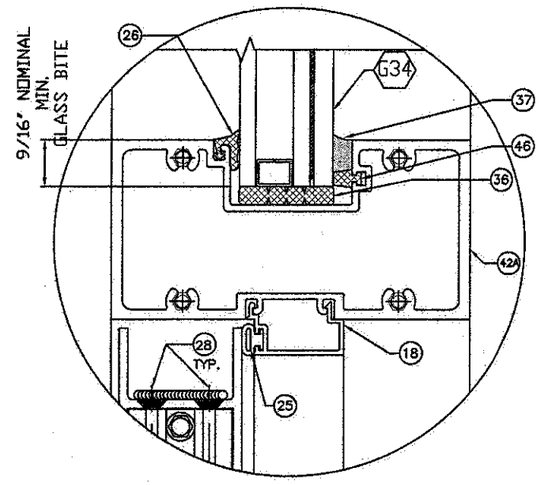

GLASS TYPE G34

SCALE: 6" = 1"

GLASS SCHEDULE FOR 3'-6"x8'-0" (MAX.) OR 7'-0"x8'-0" (MAX.) DOORS TRANSOMS				
GLASS LABEL	GLASS COMPOSITION	INTERLAYER MANUFACTURER NAME	MAXIMUM D.L.O.	MAX. DESIGN PRESSURE RATING FOR GLASS (P.S.F) W/ 37 SILICONE
G31	9/16" NOMINAL THICKNESS LAMINATED GLASS CONSISTING OF TWO 1/4" H.S. GLASS, AND A 0.090" SAFLEX PVB INTERLAYER	EASTMAN CHEMICAL COMPANY	SEE SCHEDULE ON SHEET 16	+70, -80
G34	1 5/16" NOMINAL THICKNESS INSULATED LAMINATED GLASS CONSISTING OF TWO 1/4" H.S.-O.B + 1/2" AIR SPACE + 1/4" H.S. + 0.090" SAFLEX PVB INTERLAYER + 1/4" H.S.	EASTMAN CHEMICAL COMPANY		+70, -80

TEXAS DEPARTMENT OF INSURANCE - 2006

SERIES MSD-375 (MEDIUM) & WSD-500 (WIDE)
STILE ALUMINUM ENTRANCE DOOR (WET GLAZED)
LARGE & SMALL MISSILE IMPACT

DRAWN BY: F.R.L.
DATE: 10/16/14
DRAWING No: 14-075
SHEET 10 OF 26

Oldcastle BuildingEnvelope™
803 AIRPORT RD. TERRELL TX 75160
www.OldcastleBE.com-Phone 800-869-4567

DRV. No	DESCRIPTION	DATE	DRV. No	DESCRIPTION	DATE

WALTER A. TILLIT Jr P.E.
PROFESSIONAL ENGINEER
6355 N.W 36 STREET, STE. 305
VIRGINIA GARDENS, FL 33166
PHONE(305) 871-1530 FAX (305) 871-1531
TEXAS LIC. # 90691
FIRM REGISTRATION # F-13790

STATE OF TEXAS
WALTER A. TILLIT JR.
P.E. SEAL/SIGNATURE/DATE

TYPICAL PANEL ELEVATIONS FOR MSD-375 & WSD-500 IMPACT SINGLE/PAIR OF DOORS (WET GLAZED)

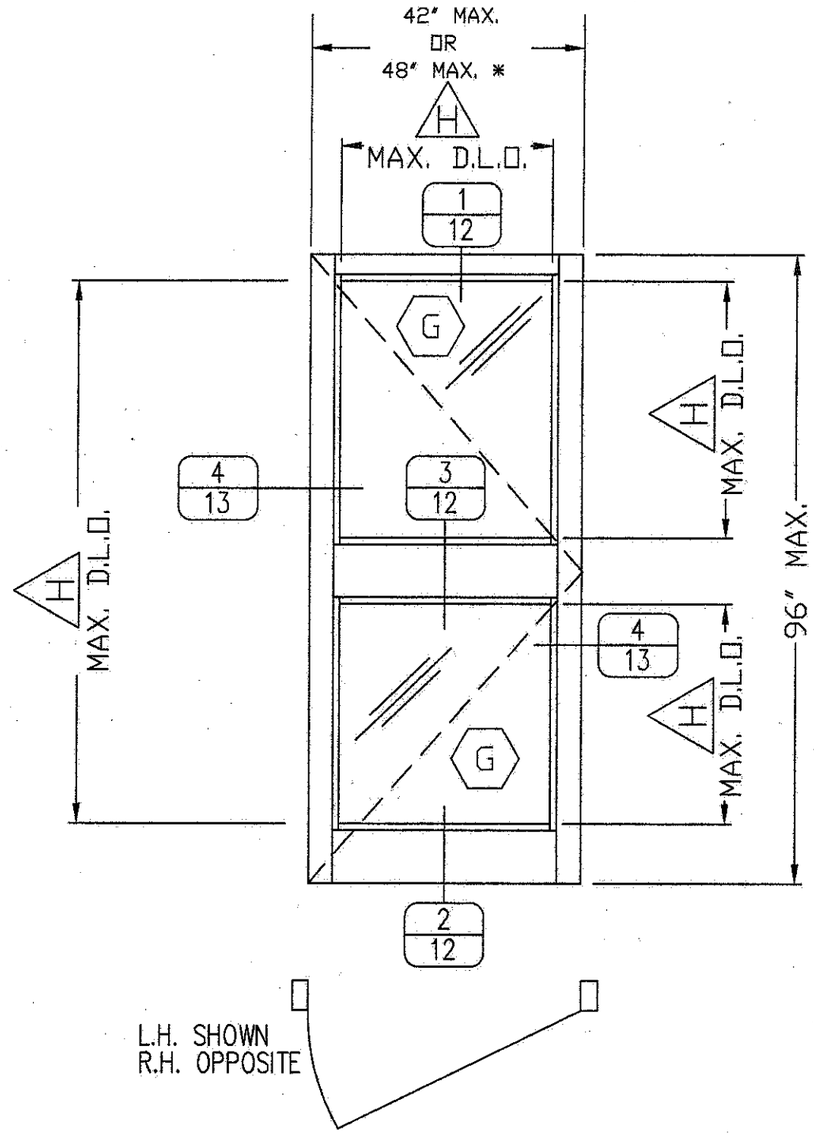

SINGLE PANEL

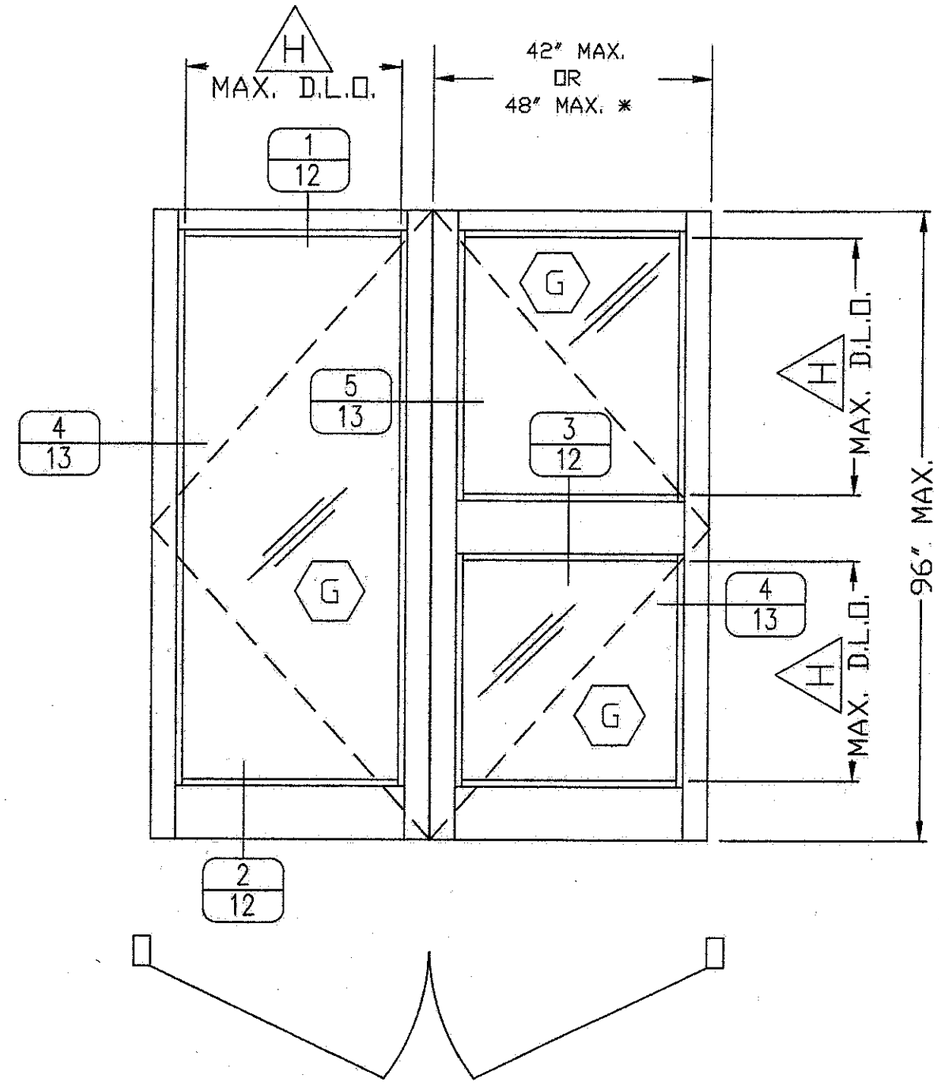

DOUBLE PANEL

FOOT NOTES:

(G) FOR GLAZING DETAILS AND GLASS SCHEDULE SEE SHEET 9.

(H) FOR MAXIMUM DAYLIGHT OPENING (D.L.O.) SEE SCHEDULE ON SHEET 9.

* SEE GENERAL NOTES #2 & 3 ON SHEET 1 FOR LIMITATIONS ON MAX. PRESSURE RATINGS, USABLE GLASS & HARDWARE.

TEXAS DEPARTMENT OF INSURANCE – 2006

SERIES MSD-375 (MEDIUM) & WSD-500 (WIDE)
STILE ALUMINUM ENTRANCE DOOR (WET GLAZED)
LARGE & SMALL MISSILE IMPACT

DRAWN BY: F.R.L.
DATE: 10/16/14
DRAWING No: 14-075
SHEET 11 OF 26

Oldcastle BuildingEnvelope
803 AIRPORT RD. TERRELL, TX 75160
www.OldcastleBE.com-Phone 800-869-4567

REV. No	DESCRIPTION	DATE	REV. No	DESCRIPTION	DATE

WALTER A. TILLIT Jr P.E.
PROFESSIONAL ENGINEER
6355 N.W 36 STREET, STE. 305
VIRGINIA GARDENS, FL 33166
PHONE(305) 871-1530 FAX (305) 871-1531
TEXAS LIC. # 90691
FIRM REGISTRATION # F-13790

P.E. SEAL/SIGNATURE/DATE

DOOR'S TOP AND BOTTOM RAILS AND HORIZONTAL MID-RAIL DETAILS (SIDE VIEWS)

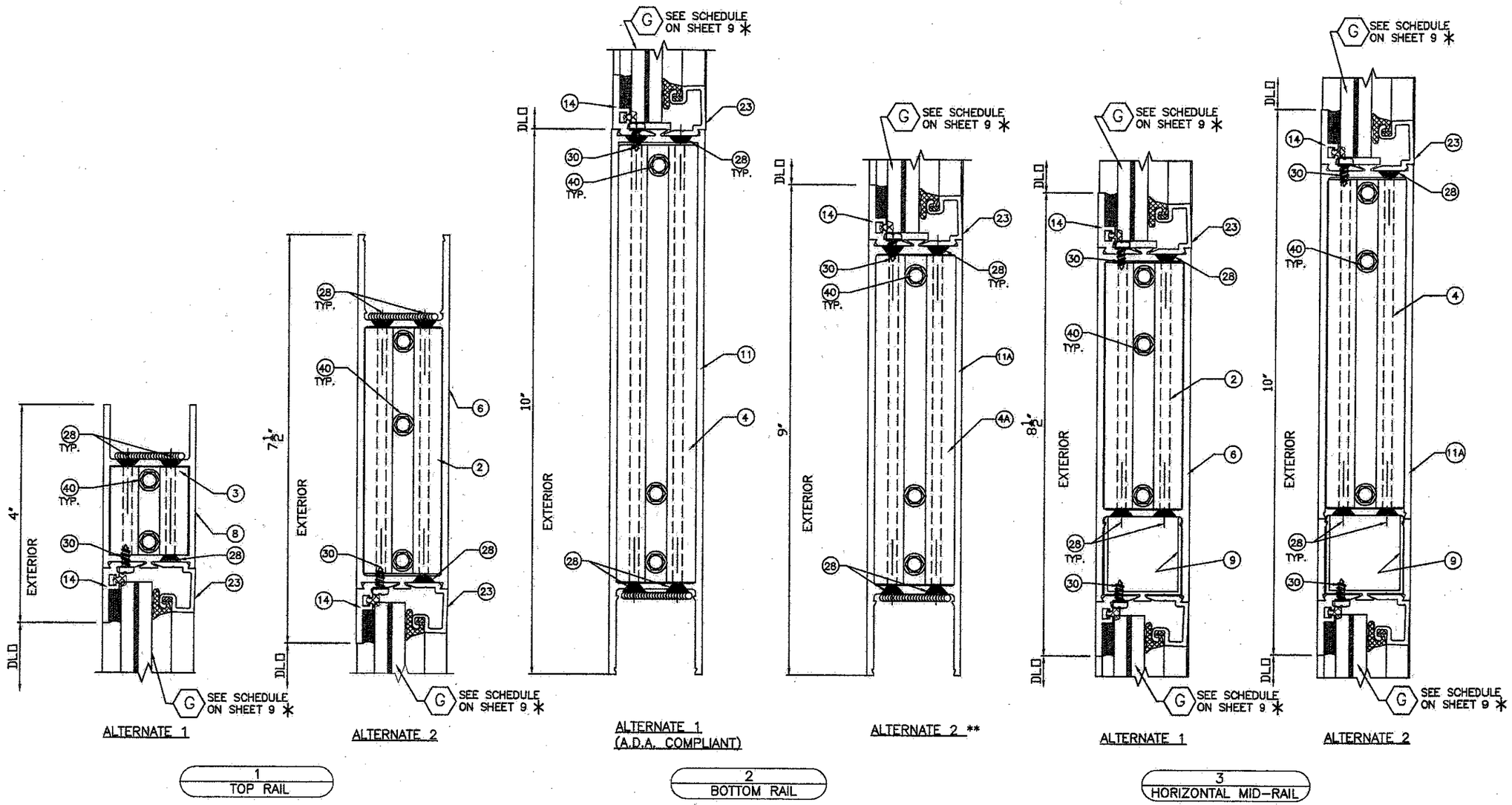

* LAMINATED GLASS SHOWN. SEE GLAZING DETAIL FOR (G15) INSULATED GLASS ON SHEET 9.

** BOTTOM RAIL (11A) ONLY ALLOWED AT 3'-6" WIDE DOOR PANELS (SINGLE OR PAIR OF DOORS).

TEXAS DEPARTMENT OF INSURANCE – 2006

SERIES MSD-375 (MEDIUM) & WSD-500 (WIDE) STILE ALUMINUM ENTRANCE DOOR (WET GLAZED) LARGE & SMALL MISSILE IMPACT

DRAWN BY: F.R.L. 10/16/14 | DATE | 14-075 DRAWING No | SHEET 12 OF 26

Oldcastle BuildingEnvelope™
803 AIRPORT RD. TERRELL, TX 75160
www.OldcastleBE.com-Phone 800-869-4507

REV. No	DATE	DESCRIPTION	REV. No	DATE	DESCRIPTION	DATE

WALTER A. TILLIT Jr P.E.
PROFESSIONAL ENGINEER
6355 N.W. 36 STREET, STE. 305
VIRGINIA GARDENS, FL 33166
PHONE(305) 871-1531 FAX (305) 871-1531
TEXAS LIC. # 90691
FIRM REGISTRATION # F-13790

STATE OF TEXAS — WALTER A. TILLIT — LICENSED PROFESSIONAL ENGINEER

P.E. SEAL/SIGNATURE/DATE

DOOR'S HINGE/LOCK/MEETING STILES AND THRESHOLD CONNECTION DETAILS (PLAN VIEWS)

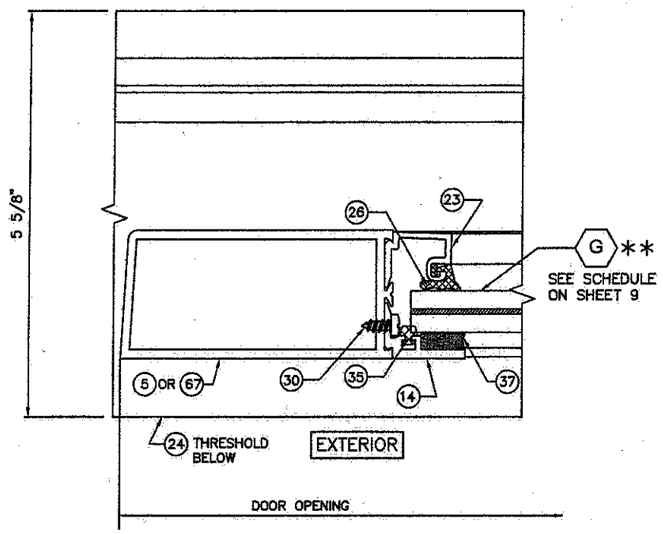

4
JAMB

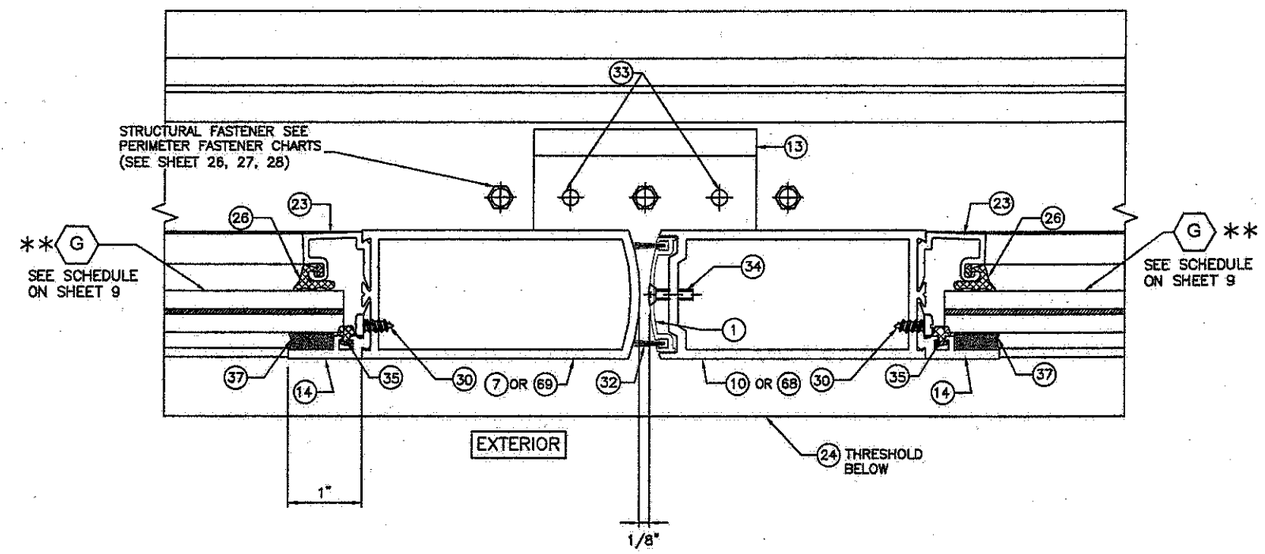

5
MEETING STILES & THRESHOLD CONNECTION

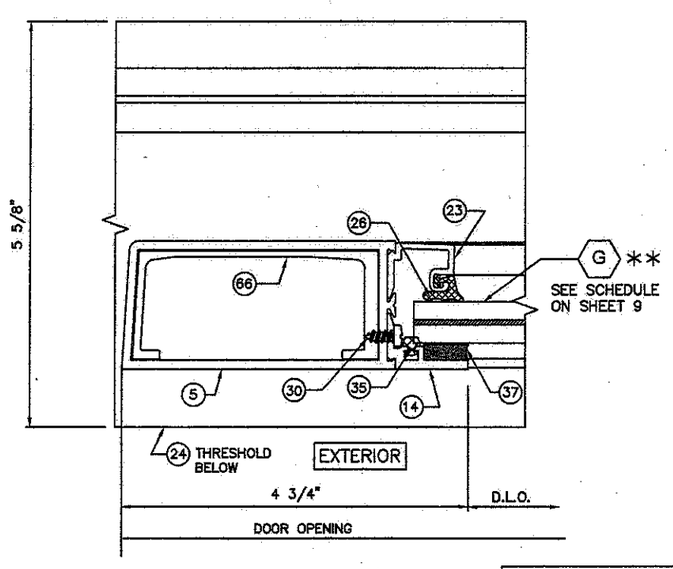

4A*
LOCK STILE AT SINGLE DOOR ONLY

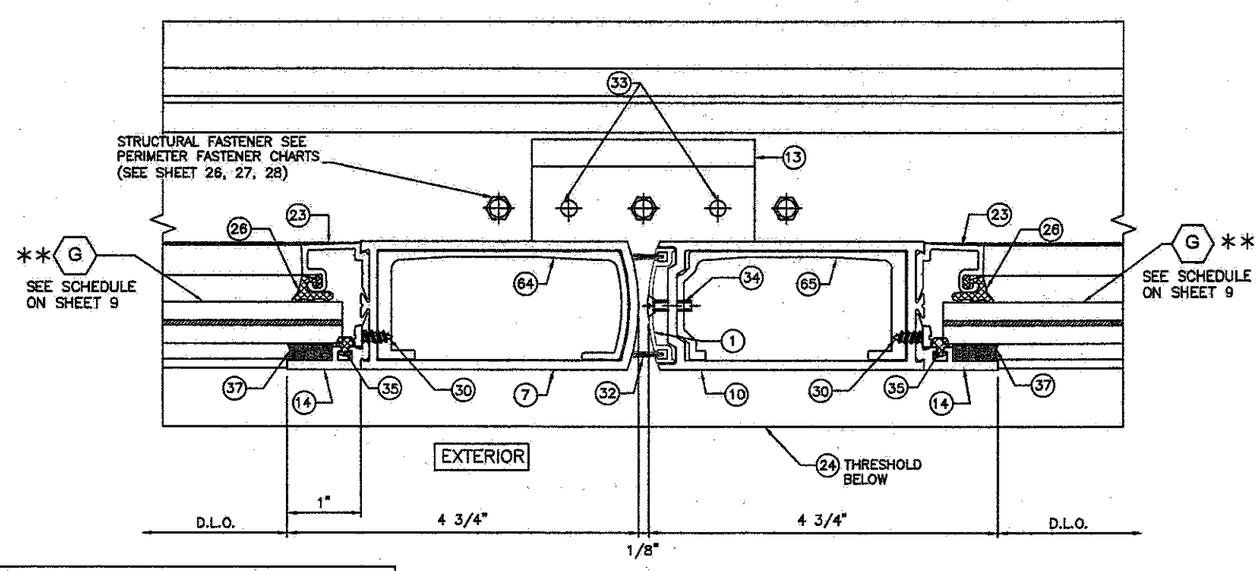

5A*
MEETING STILES & THRESHOLD CONNECTION

* DETAILS 4A AND 5A ARE ONLY REQUIRED AND APPLICABLE WHEN A REGENT 5770 CONCEALED PANIC DEVICE IS USED.

**LAMINATED GLASS SHOWN, SEE GLAZING DETAIL FOR (G15) INSULATING GLASS ON SHEET 9.

TEXAS DEPARTMENT OF INSURANCE – 2006

SERIES MSD-375 (MEDIUM) & WSD-500 (WIDE)
STILE ALUMINUM ENTRANCE DOOR (WET GLAZED)
LARGE & SMALL MISSILE IMPACT

DRAWN BY: F.R.L
DATE: 10/16/14
DRAWING No: 14-075
SHEET 13 OF 26

Oldcastle BuildingEnvelope
803 AIRPORT RD. TERRELL, TX 75160
www.OldcastleBE.com-Phone 800-869-4567

WALTER A. TILLIT Jr P.E.
PROFESSIONAL ENGINEER
6355 N.W 36 STREET, STE. 305
VIRGINIA GARDENS, FL 33166
PHONE(305) 871-1530 FAX (305) 871-1531
TEXAS LIC. # 90691
FIRM REGISTRATION # F-13790

P.E. SEAL/SIGNATURE/DATE

TYPICAL DOOR CORNER ASSEMBLY DETAILS (ISOMETRIC)

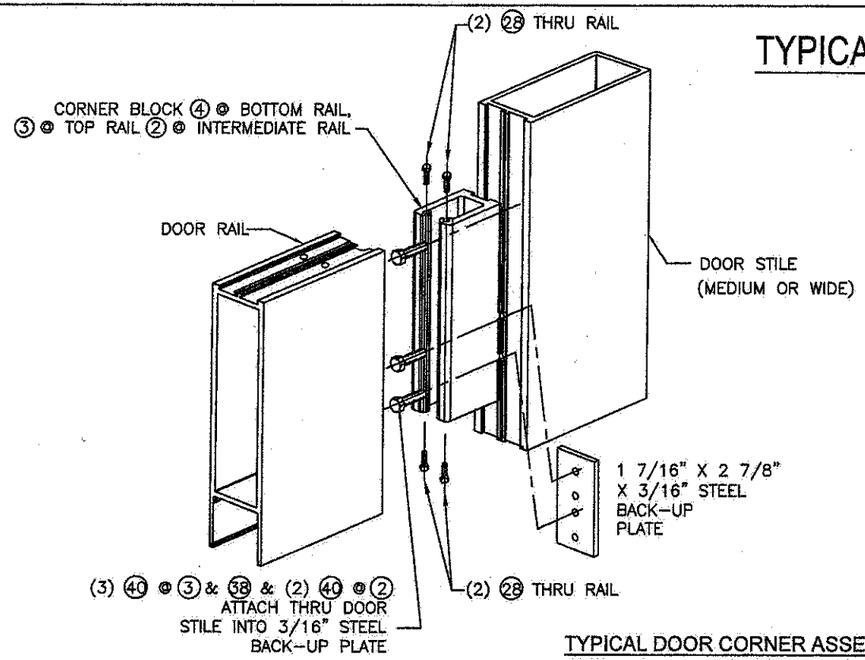

TYPICAL DOOR CORNER ASSEMBLY DETAIL (ISOMETRIC)

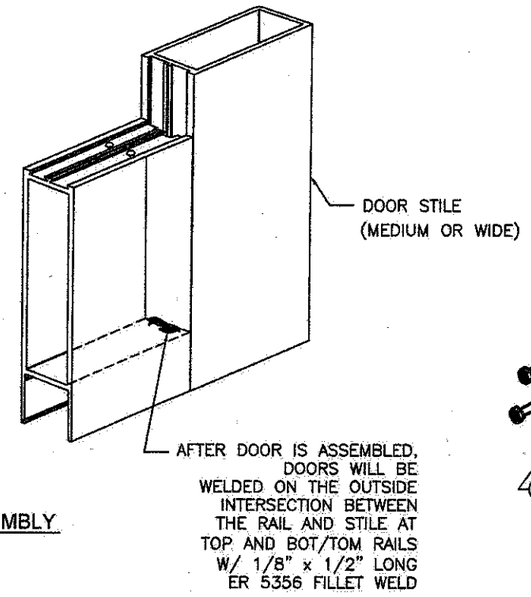

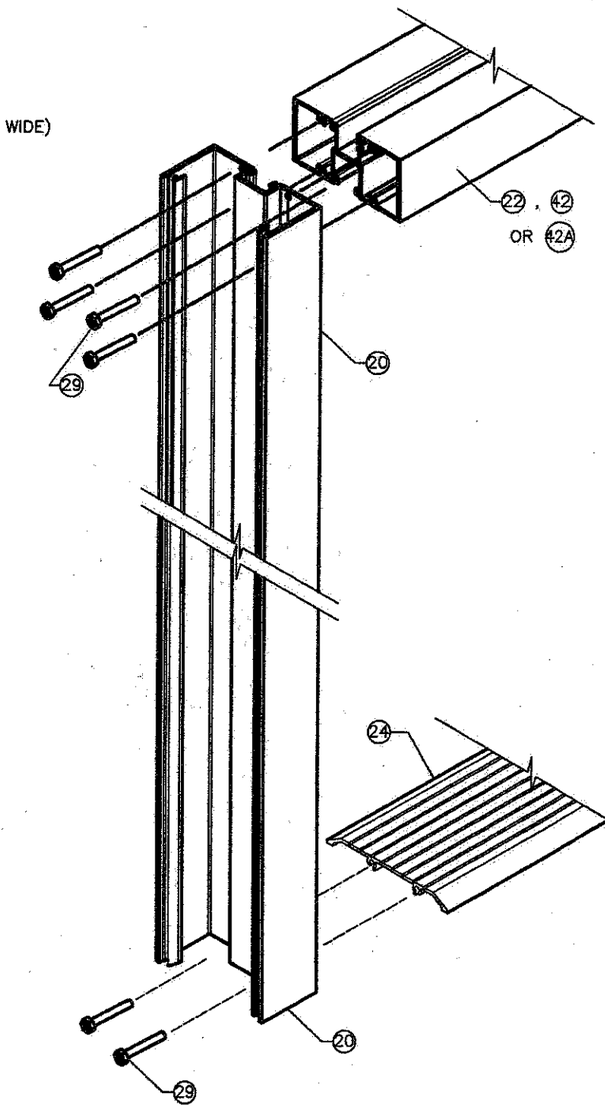

HEAD AND THRESHOLD ASSEMBLY

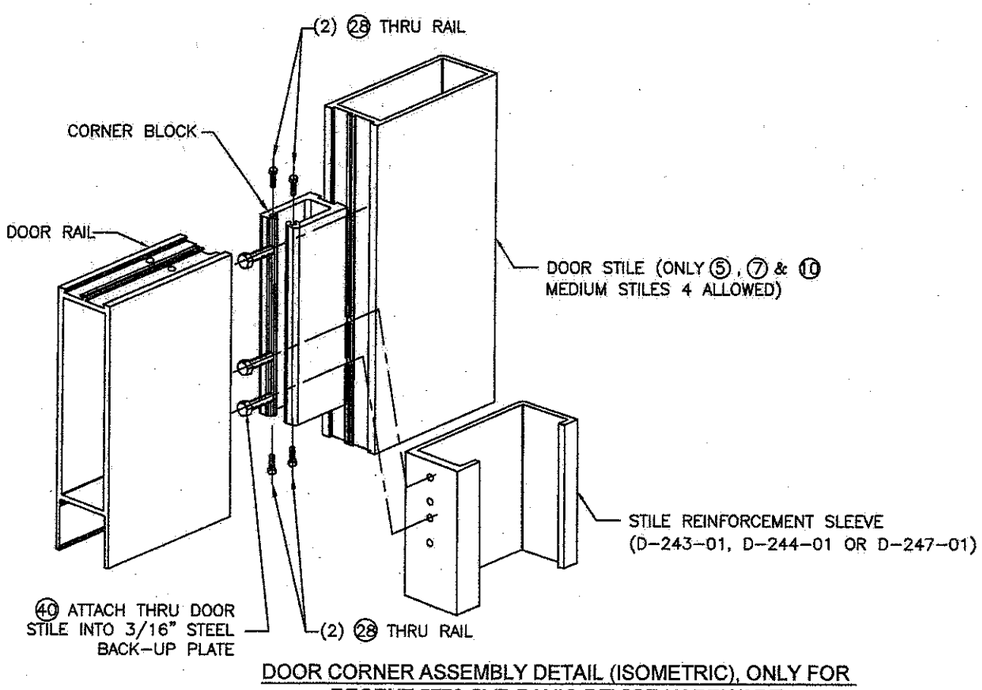

DOOR CORNER ASSEMBLY DETAIL (ISOMETRIC), ONLY FOR REGENT 5770 CVR PANIC DEVICE HARDWARE

TEXAS DEPARTMENT OF INSURANCE – 2006

SERIES MSD-375 (MEDIUM) & WSD-500 (WIDE)
STILE ALUMINUM ENTRANCE DOOR (WET GLAZED)
LARGE & SMALL MISSILE IMPACT

DRAWN BY: F.R.L
DATE 10/16/14

14-075
DRAWING No

SHEET 14 OF 26

Oldcastle BuildingEnvelope™
803 AIRPORT RD. TERRELL, TX 75160
www.OldcastleBE.com-Phone 800-889-4567

REV. No.	DESCRIPTION	DATE	REV. No.	DESCRIPTION	DATE

WALTER A. TILLIT Jr P.E.
PROFESSIONAL ENGINEER
6355 N.W 36 STREET, STE. 305
VIRGINIA GARDENS, FL 33166
PHONE(305) 871-1530 FAX (305) 871-1531
TEXAS LIC. # 90691
FIRM REGISTRATION # F-13790

STATE OF TEXAS
WALTER A. TILLIT JR.
90691
11/5/14

P.E. SEAL/SIGNATURE/DATE

TYPICAL EXTERIOR ELEVATIONS FOR MSD-375 & WSD-500 IMPACT DOOR (WET GLAZED) 3'-6"x8'-0" (SINGLE) & 7'-0"x8'-0" (PAIR) CONNECTED TO EXISTING STRUCTURE OR FG-5000, FG-5100 OR FG-5100T ALUMINUM WINDOW WALL SYSTEM FRAMING

MAX. DESIGN PRESSURE RATING WITH LAMINATED GLASS IS +70, -80 psf.
MAX. DESIGN PRESSURE RATING WITH INSULATED GLASS IS +70, -70 psf.
MAX. DESIGN PRESSURE RATING WITH RIM PANIC HARDWARE IS +60, -60 psf.

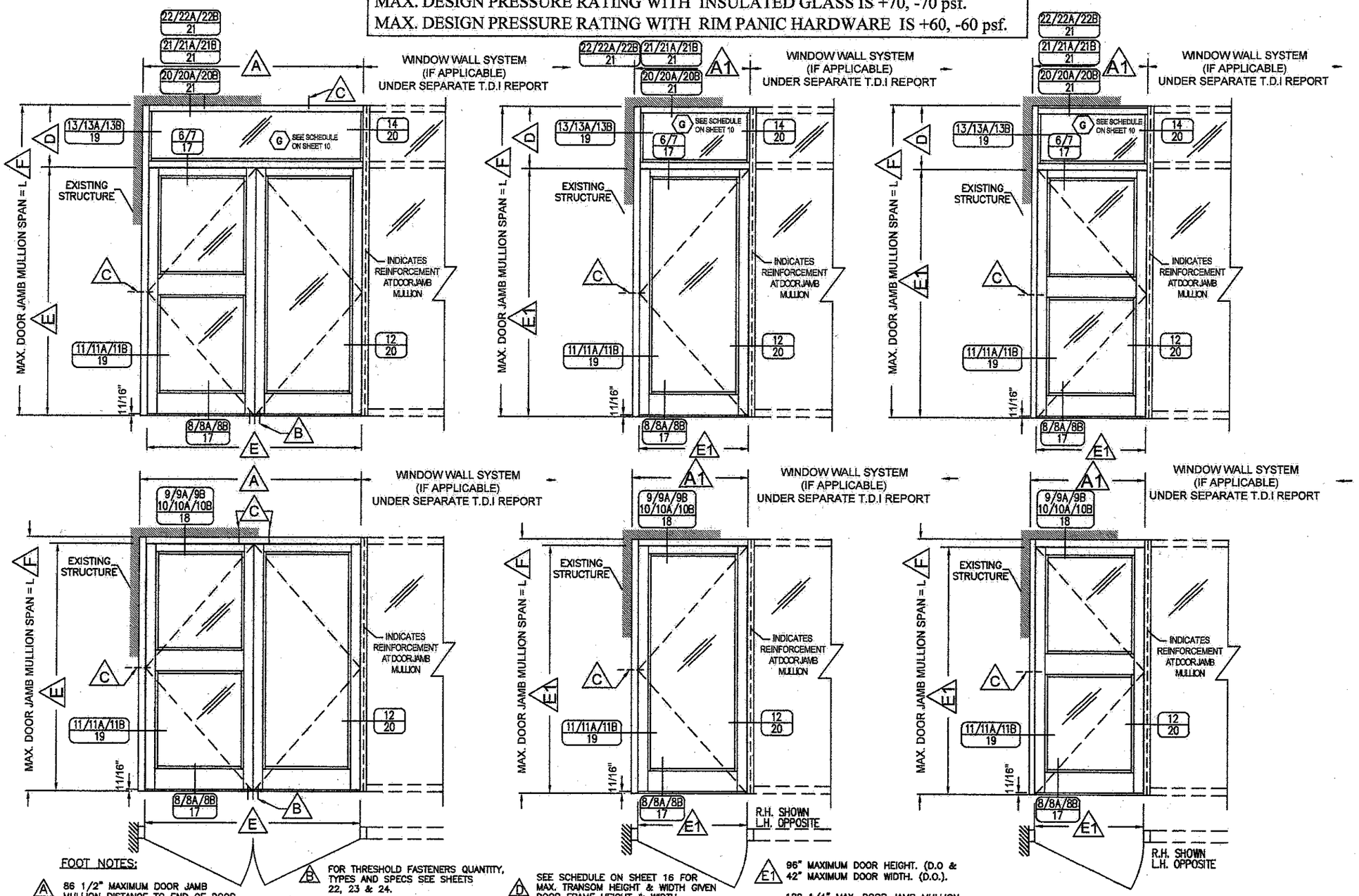

FOOT NOTES:

A 86 1/2" MAXIMUM DOOR JAMB MULLION DISTANCE TO END OF DOOR.

A1 44 1/2" MAX. DOOR JAMB MULLION DISTANCE TO END OF DOOR.

B FOR THRESHOLD FASTENERS QUANTITY, TYPES AND SPECS SEE SHEETS 22, 23 & 24.

C FOR JAMB & HEAD FASTENERS QUANTITY, TYPES AND SPECS SEE SHEETS 22, 23 & 24.

D SEE SCHEDULE ON SHEET 16 FOR MAX. TRANSOM HEIGHT & WIDTH GIVEN DOOR FRAME HEIGHT & WIDTH

E 96" MAXIMUM DOOR HEIGHT (D.O.) & 84" MAXIMUM DOOR WIDTH (D.O.).

E1 96" MAXIMUM DOOR HEIGHT. (D.O & 42" MAXIMUM DOOR WIDTH. (D.O.).

F 120 1/4" MAX. DOOR JAMB MULLION SPAN FOR DOOR W/ TRANSOM & 98 1/2" MAX. DOOR JAMB MULLION SPAN FOR DOOR W/O TRANSOM.

TEXAS DEPARTMENT OF INSURANCE – 2006

SERIES MSD-375 (MEDIUM) & WSD-500 (WIDE)
STILE ALUMINUM ENTRANCE DOOR (WET GLAZED)
LARGE & SMALL MISSILE IMPACT

DRAWN BY: F.R.L.
DATE: 10/16/14
DRAWING No: 14-075
SHEET 15 OF 26

Oldcastle BuildingEnvelope
803 AIRPORT RD. TERRELL TX 75160
www.OldcastleBE.com-Phone 800-869-4567

REV. No.	DATE	DESCRIPTION	REV. No.	DATE	DESCRIPTION

WALTER A. TILLIT Jr. P.E.
PROFESSIONAL ENGINEER
6355 N.W 36 STREET, STE. 305
VIRGINIA GARDENS, FL 33166
PHONE(305) 871-1530 FAX (305) 871-1531
TEXAS LIC. # 90691
FIRM REGISTRATION # F-13790

STATE OF TEXAS
P.E. SEAL/SIGNATURE/DATE

MAXIMUM TRANSOM WIDTH & HEIGHT SCHEDULE GIVEN MAX. WIDTH & HEIGHT FOR DOOR
(VALID ONLY FOR 3'-6"x8'-0" (MAX) OR 7'-0"x8'-0" (MAX) SINGLE & PAIR OF DOORS RESPECTIVELY)

DOOR WIDTH (IN)		DOOR HEIGHT (IN)	TRANSOM WIDTH(IN)		TRANSOM HEIGHT (IN)
SINGLE	DOUBLE		SINGLE	DOUBLE	
30"	60"	84"	30"	60"	36"
30"	60"	96"	30"	60"	24"
36"	72"	84"	36"	72"	36"
36"	72"	96"	36"	72"	24"
42"	84"	84"	42"	84"	30"
42"	84"	96"	42"	84"	24"

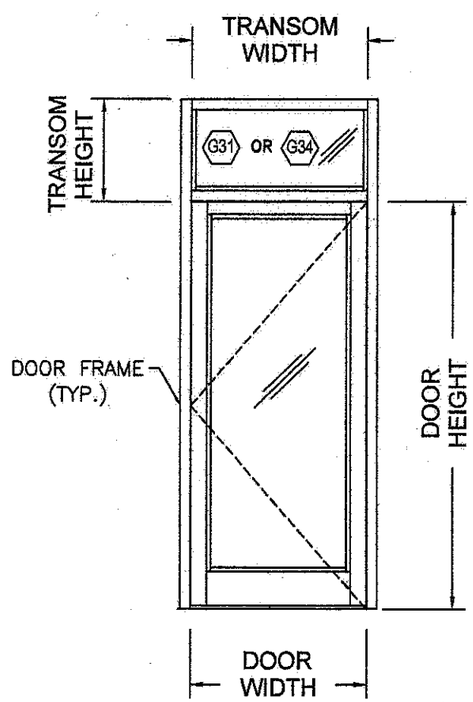

SINGLE DOOR

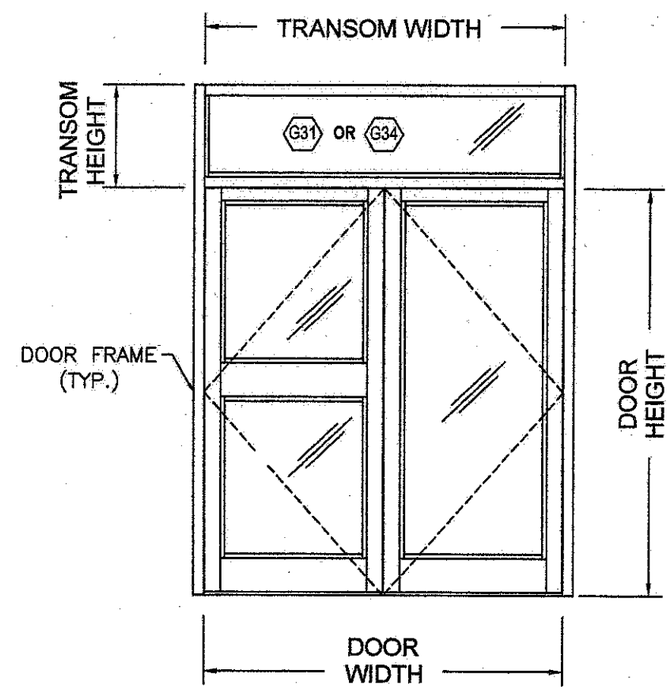

DOUBLE DOOR

TEXAS DEPARTMENT OF INSURANCE - 2006

SERIES MSD-375 (MEDIUM) & WSD-500 (WIDE)
STILE ALUMINUM ENTRANCE DOOR (WET GLAZED)
LARGE & SMALL MISSILE IMPACT

DRAWN BY: F.R.L
DATE 10/16/14
DRAWING No 14-075
SHEET 16 OF 26

Oldcastle BuildingEnvelope
800 AIRPORT RD. TERRELL TX 75160
www.OldcastleBE.com-Phone 800-869-4507

REV. No	DESCRIPTION	DATE	REV. No	DESCRIPTION	DATE

WALTER A. TILLIT Jr P.E.
PROFESSIONAL ENGINEER
6355 N.W. 36 STREET, STE. 305
VIRGINIA GARDENS, FL 33166
PHONE(305) 871-1530 FAX (305) 871-1531
TEXAS LIC. # 90691
FIRM REGISTRATION # F-13790

STATE OF TEXAS
WALTER A. TILLIT, JR.
90691

P.E. SEAL/SIGNATURE/DATE

TRANSOM BAR CONNECTION DETAILS TO FG-5000, FG-5100 AND FG-5100T *

* VALID ONLY FOR 3'-6"x7'-0" OR 7'-0"x8'-0" DOORS AT FG-500, FG-5100 & FG-5100T

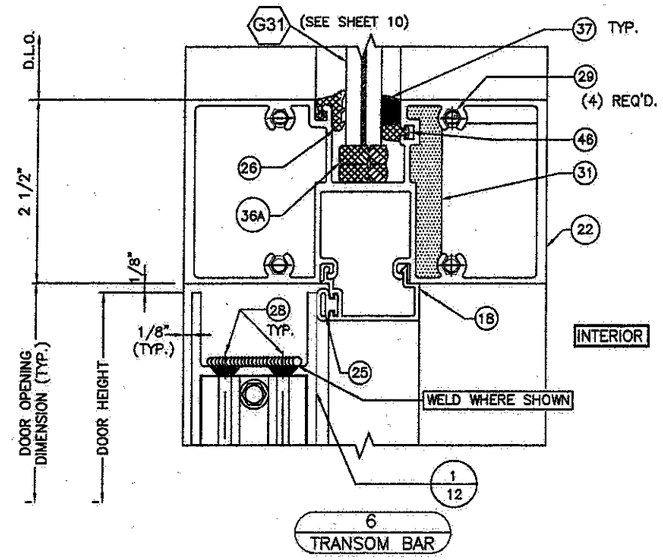

6
TRANSOM BAR

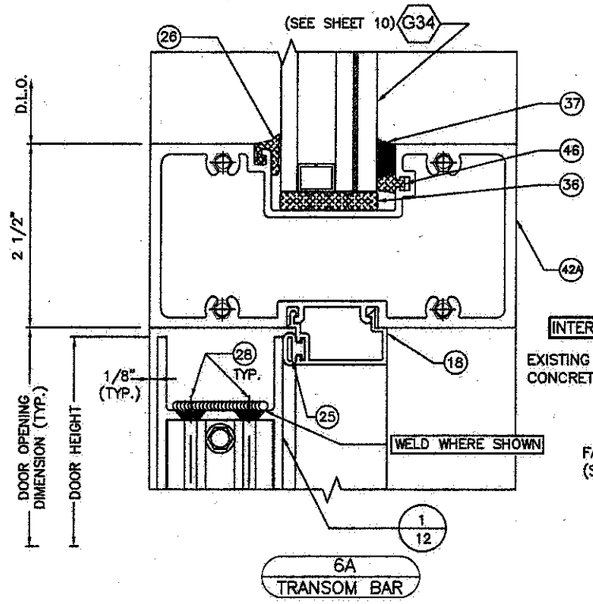

6A
TRANSOM BAR

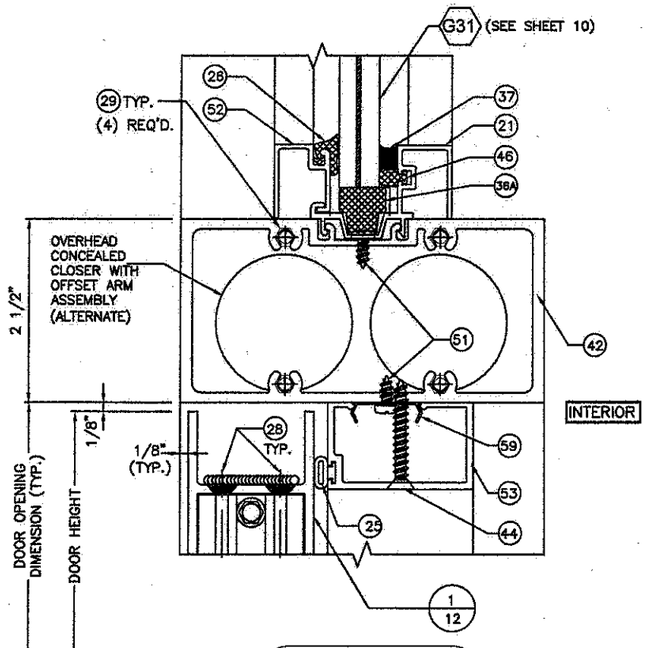

7
TRANSOM BAR CONC.

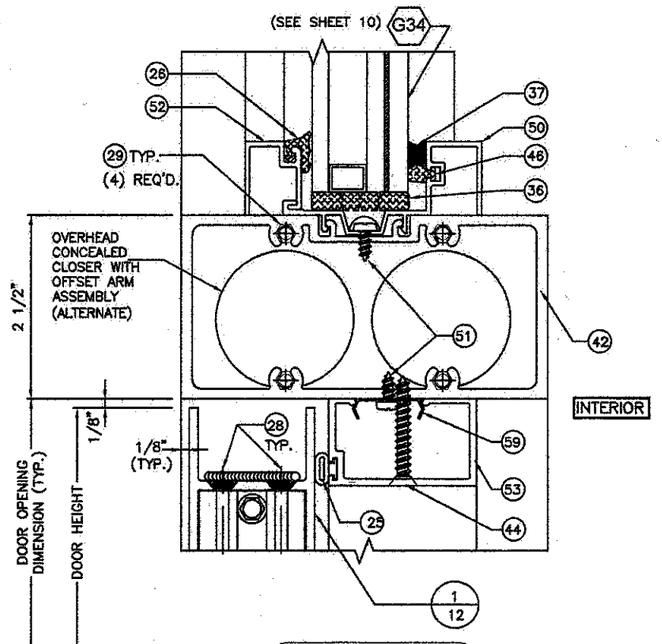

7A
TRANSOM BAR CONC.

THRESHOLD CONNECTION DETAILS TO FG-5000, FG-5100 & FG-5100T

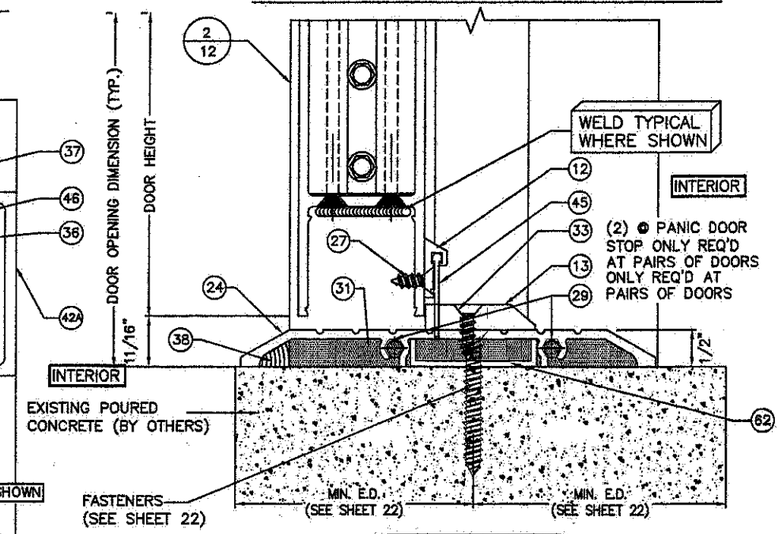

8
THRESHOLD

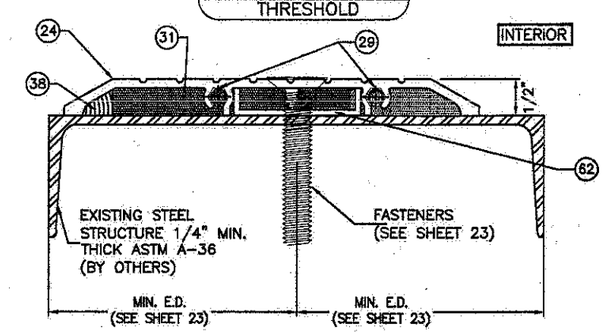

8A
THRESHOLD

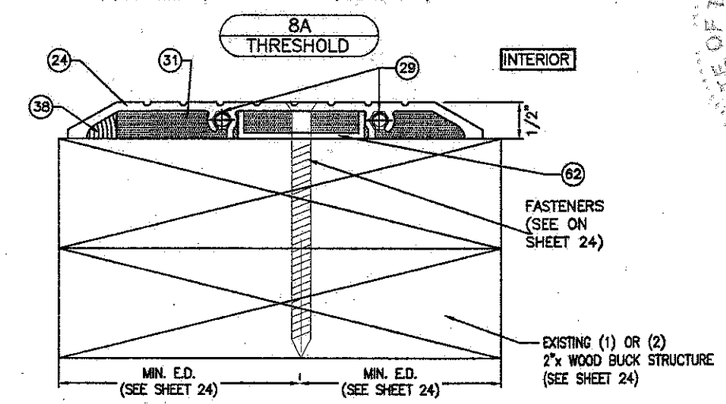

8B
THRESHOLD

TEXAS DEPARTMENT OF INSURANCE – 2006

SERIES MSD-375 (MEDIUM) & WSD-500 (WIDE)
STILE ALUMINUM ENTRANCE DOOR (WET GLAZED)
LARGE & SMALL MISSILE IMPACT

DRAWN BY: F.R.L
DATE: 10/16/14
DRAWING No: 14-075
SHEET 17 OF 26

Oldcastle BuildingEnvelope™
803 AIRPORT RD. TERRELL TX 75160
www.OldcastleBE.com-Phone 800-869-4567

REV. No.	DESCRIPTION	DATE	REV. No.	DESCRIPTION	DATE

WALTER A. TILLIT Jr P.E.
PROFESSIONAL ENGINEER
6355 N.W 36 STREET, STE. 305
VIRGINIA GARDENS, FL 33166
PHONE(305) 871-1530 FAX (305) 871-1531
TEXAS LIC. # 90691
FIRM REGISTRATION # F-13790

P.E. SEAL/SIGNATURE/DATE

HEADER CONNECTION DETAILS TO EXISTING STRUCTURE, FG-5000 AND FG-5100

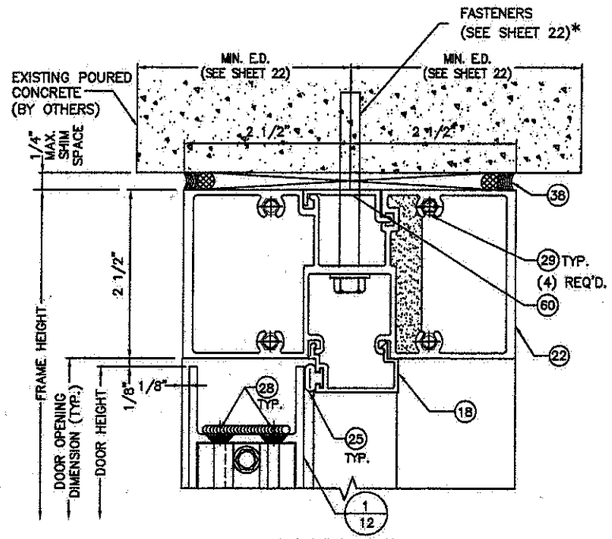

9
HEADER

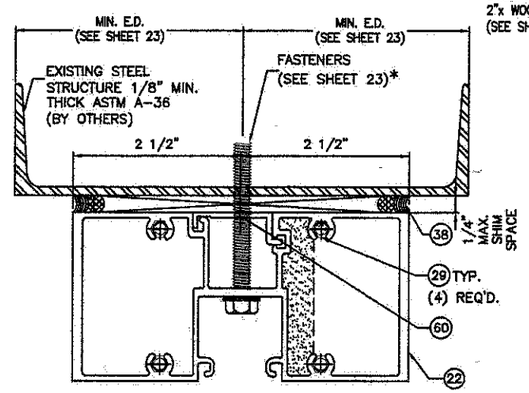

9A
HEADER

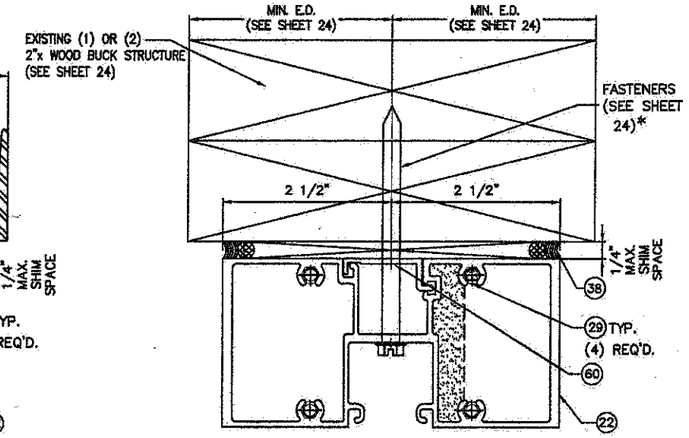

9B
HEADER

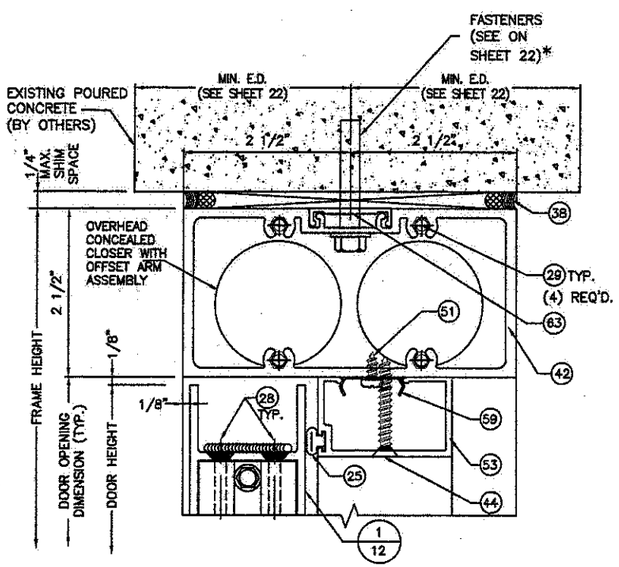

10
HEADER CONC.

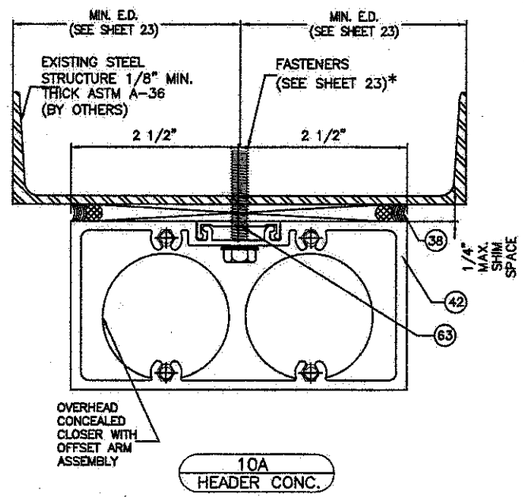

10A
HEADER CONC.

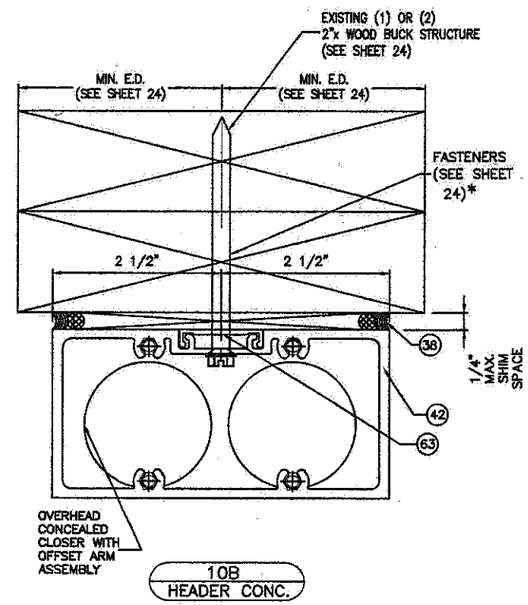

10B
HEADER CONC.

* ONLY REQUIRED AT PAIRS OF DOORS

TEXAS DEPARTMENT OF INSURANCE – 2006

SERIES MSD-375 (MEDIUM) & WSD-500 (WIDE) STILE ALUMINUM ENTRANCE DOOR (WET GLAZED) LARGE & SMALL MISSILE IMPACT

DRAWN BY: F.R.L. 10/16/14

DATE

14-075 DRAWING No

SHEET 18 OF 26

Oldcastle BuildingEnvelope™
803 AIRPORT RD. TERRELL TX 75160
www.OldcastleBE.com-Phone 800-869-4567

REV. No.	DESCRIPTION	DATE	REV. No.	DESCRIPTION	DATE

WALTER A. TILLIT Jr P.E.
PROFESSIONAL ENGINEER
6355 N.W 36 STREET, STE. 305
VIRGINIA GARDENS, FL 33166
PHONE(305) 871-1530 FAX (305) 871-1531
TEXAS LIC. # 90691
FIRM REGISTRATION # F-13790

STATE OF TEXAS
WALTER A. TILLIT Jr.
90691
10/17/2014

P.E. SEAL/SIGNATURE/DATE

JAMB & DOOR JAMB MULLION CONNECTION DETAILS TO EXISTING STRUCTURE, FG-5000 AND FG-5100

◊ NOTE:
INDICATED MAXIMUM AND MINIMUM VALUES FOR SPECIFIED SEALANT VERTICAL JOINT WIDTH AT JAMBS CONNECTED TO WALL HAVE BEEN DETERMINED ONLY TAKING INTO CONSIDERATION THE ACTUAL MOVEMENT OF GLASS WALL AT JAMBS DUE TO THERMAL, WIND AND ITS OWN CONSTRUCTION TOLERANCE, AND NOT PERFORMANCE FACTORS FROM THE SURROUNDING STRUCTURE.

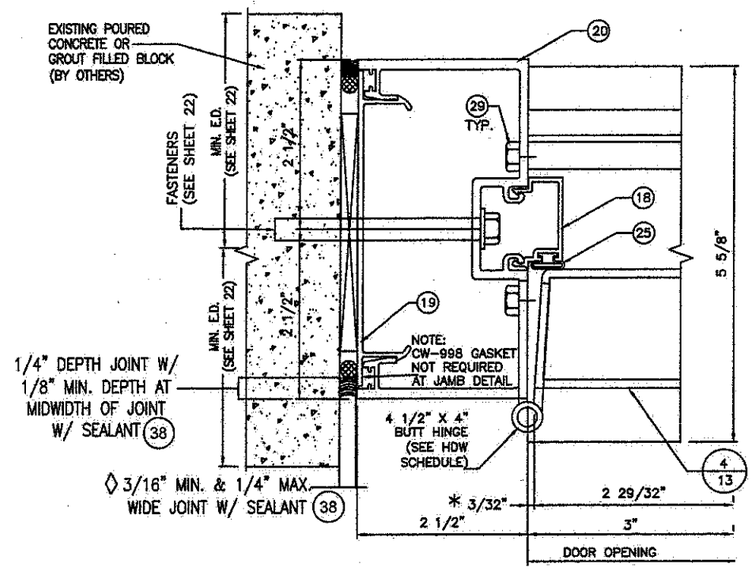

11
JAMB TO WALL @ DOOR

* NOTE:
3/32" CLEARANCE DIMENSIONS SHOWN ARE TYPICAL FOR BUTT HINGES OR OFFSET PIVOTS. GEAR HINGES REQUIRE 5/16" CLEARANCE AT JAMBS.

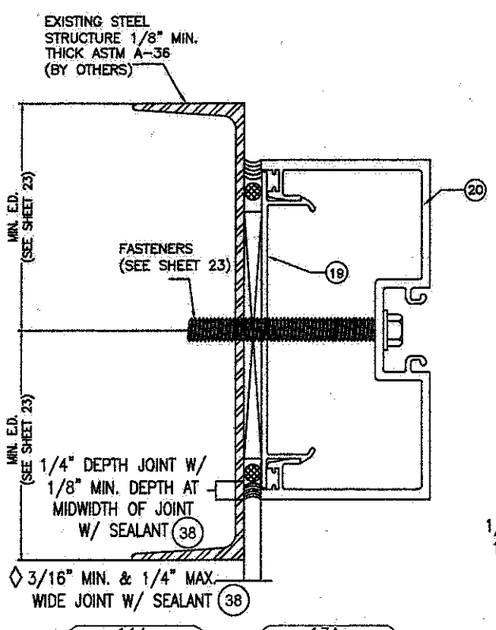

11A
JAMB TO WALL

OR

13A
JAMB TO WALL @ TRANSOM

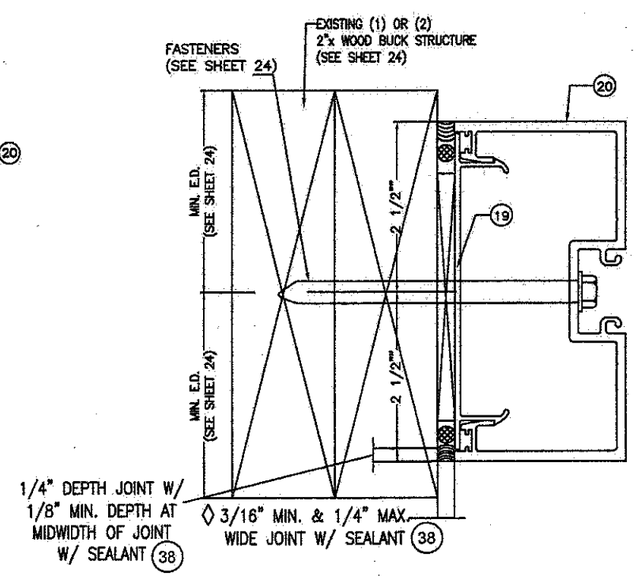

11B
JAMB TO WALL

OR

13B
JAMB TO WALL @ TRANSOM

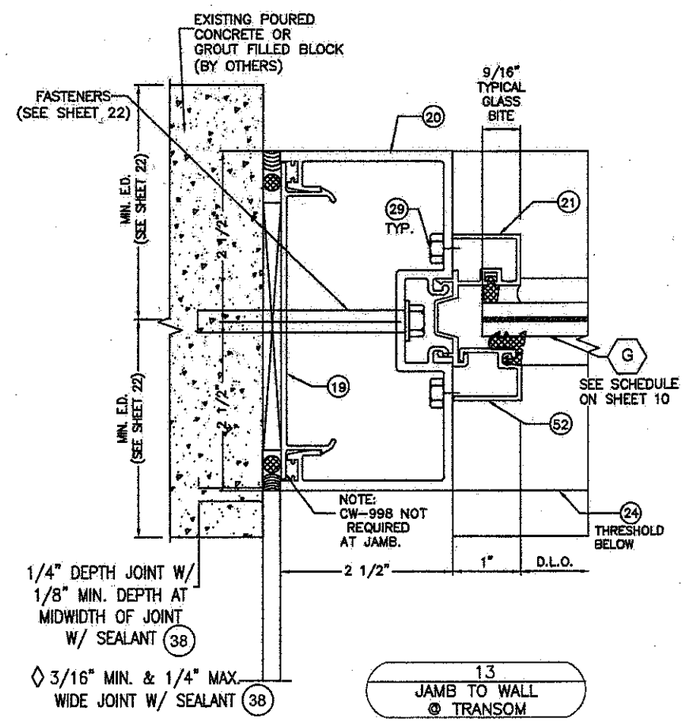

13
JAMB TO WALL @ TRANSOM

TEXAS DEPARTMENT OF INSURANCE – 2006

SERIES MSD-375 (MEDIUM) & WSD-500 (WIDE)
STILE ALUMINUM ENTRANCE DOOR (WET GLAZED)
LARGE & SMALL MISSILE IMPACT

DRAWN BY: F.R.L
DATE: 10/16/14
DRAWING No: 14-075
SHEET 19 OF 26

Oldcastle BuildingEnvelope
803 AIRPORT RD. TERRELL TX 75160
www.OldcastleBE.com Phone 800-869-4567

REV. No	DESCRIPTION	DATE	REV. No	DESCRIPTION	DATE

WALTER A. TILLIT Jr P.E.
PROFESSIONAL ENGINEER
6355 N.W. 36 STREET, STE. 305
VIRGINIA GARDENS, FL 33166
PHONE(305) 871-1530 FAX (305) 871-1531
TEXAS LIC. # 90691
FIRM REGISTRATION # F-13790

STATE OF TEXAS
WALTER A. TILLIT, JR.
90691
11/13/14
P.E. SEAL/SIGNATURE/DATE

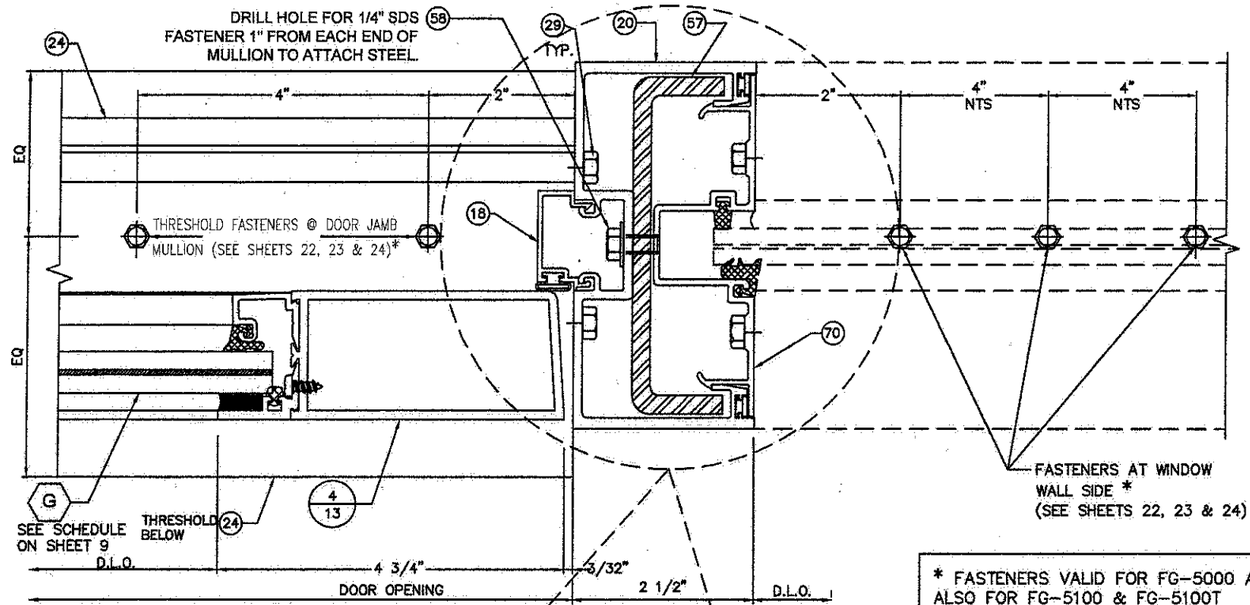

12
DOOR JAMB MULLION @ DOOR W/FG-5000

* FASTENERS VALID FOR FG-5000 AND ALSO FOR FG-5100 & FG-5100T

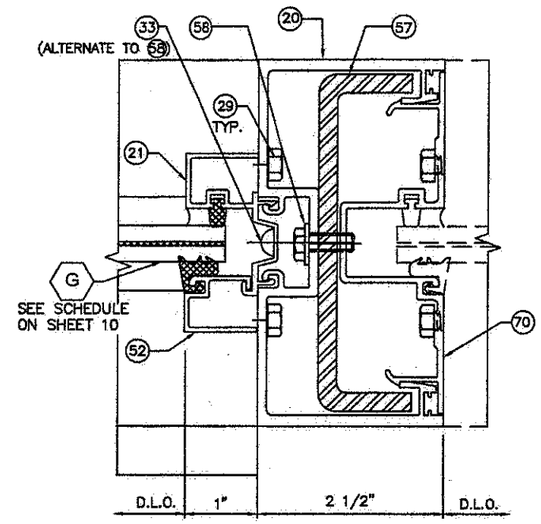

14
DOOR JAMB MULLION @ TRANSOM W/FG-5000

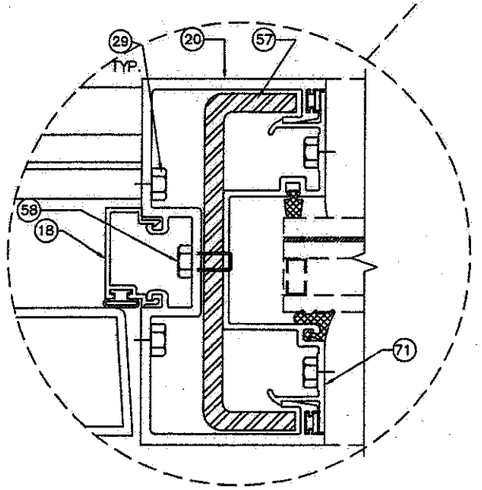

12
DOOR JAMB MULLION @ DOOR W/FG-5100

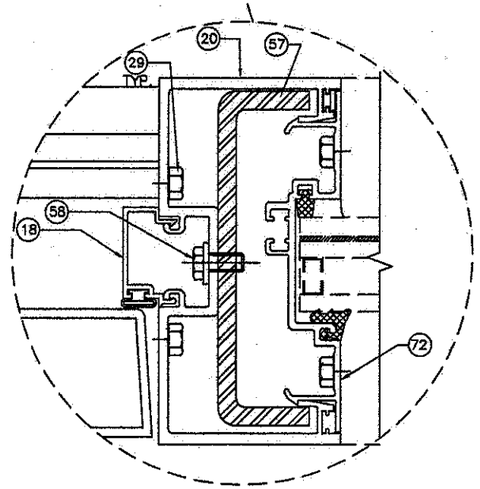

12
DOOR JAMB MULLION @ DOOR W/FG-5100T

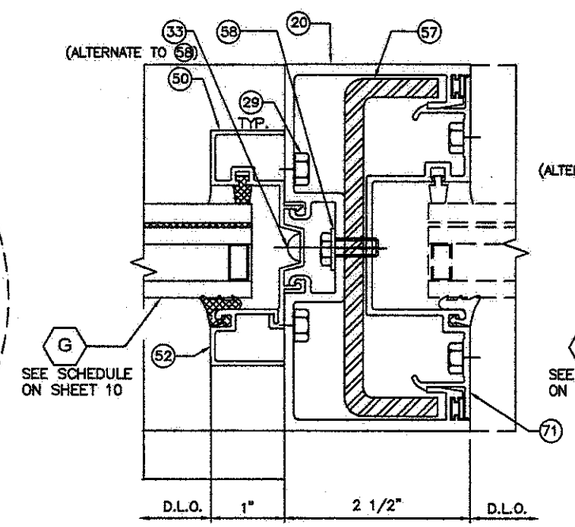

14
DOOR JAMB MULLION @ TRANSOM W/FG-5100

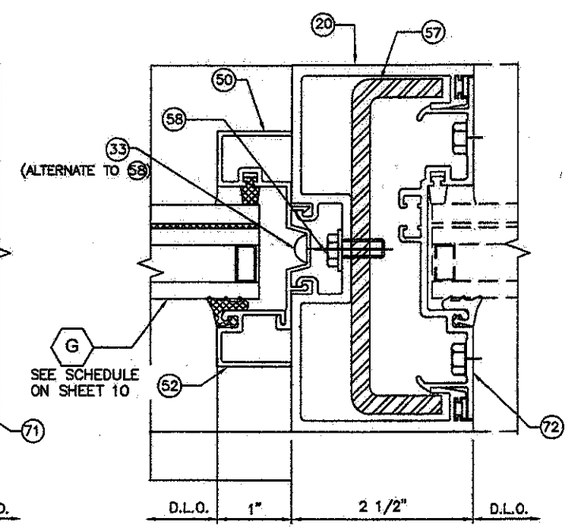

14
DOOR JAMB MULLION @ TRANSOM W/FG-5100T

TEXAS DEPARTMENT OF INSURANCE - 2006

SERIES MSD-375 (MEDIUM) & WSD-500 (WIDE) STILE ALUMINUM ENTRANCE DOOR (WET GLAZED) LARGE & SMALL MISSILE IMPACT

DRAWN BY: F.R.J.
DATE: 10/16/14
DRAWING No: 14-075
SHEET 20 OF 26

Oldcastle BuildingEnvelope™
803 AIRPORT RD. TERRELL TX 75160
www.OldcastleBEL.com-Phone 800-869-4567

REV. No.	DESCRIPTION	DATE	REV. No.	DESCRIPTION	DATE

WALTER A. TILLIT Jr P.E.
PROFESSIONAL ENGINEER
6355 N.W 36 STREET, STE. 305
VIRGINIA GARDENS, FL 33166
PHONE(305) 871-1530 FAX (305) 871-1531
TEXAS LIC. # 90691
FIRM REGISTRATION # F-13790

P.E. SEAL/SIGNATURE/DATE

HEADER @ TRANSOM CONNECTION DETAILS AT FG 5000 SYSTEM TO EXISTING STRUCTURE
(VALID ONLY FOR 3'-6"x8'-0" OR 7'-0"x8'-0" DOORS)

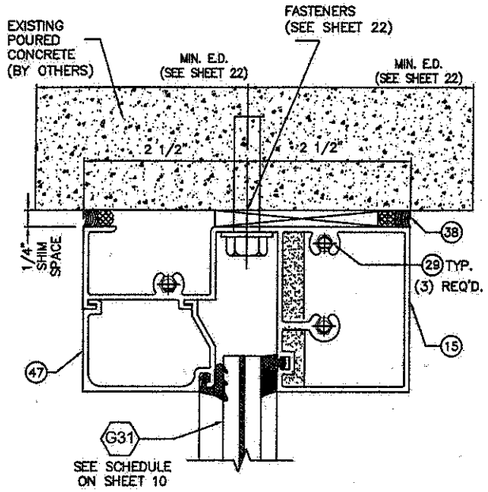

20
HEADER @ TRANSOM
FG-5000

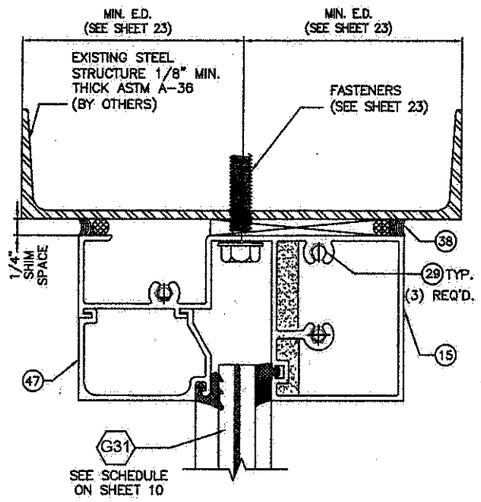

20A
HEADER @ TRANSOM
FG-5000

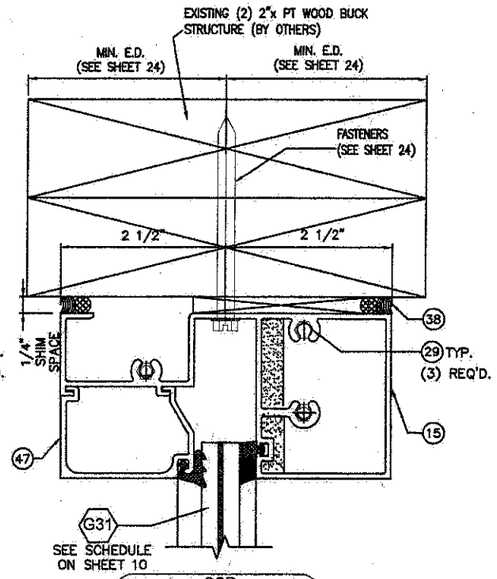

20B
HEADER @ TRANSOM
FG-5000

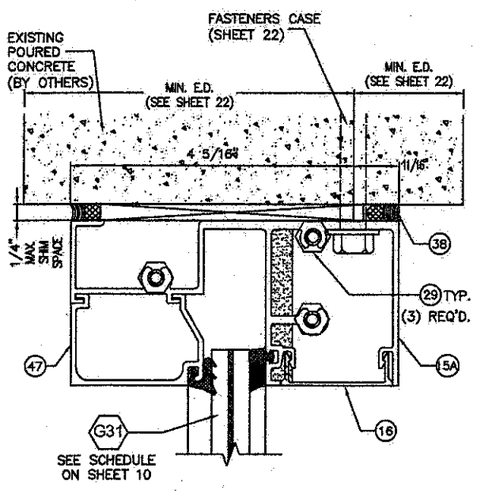

21
HEADER @ TRANSOM
(OPTION TO 15)
FG-5000

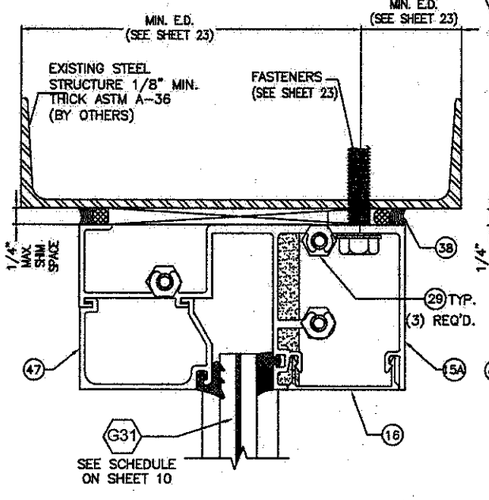

21A
HEADER @ TRANSOM
(OPTION TO 15)
FG-5000

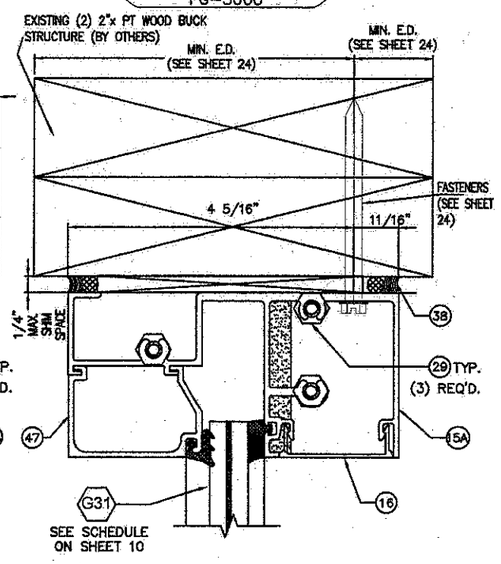

21B
HEADER @ TRANSOM
(OPTION TO 15)
FG-5000

HEADER @ TRANSOM CONN. DETAILS AT FG 5100, FG 5100T SYSTEM TO EXISTING STRUCTURE
(VALID ONLY FOR 3'-6"x8'-0" OR 7'-0"x8'-0" DOORS)

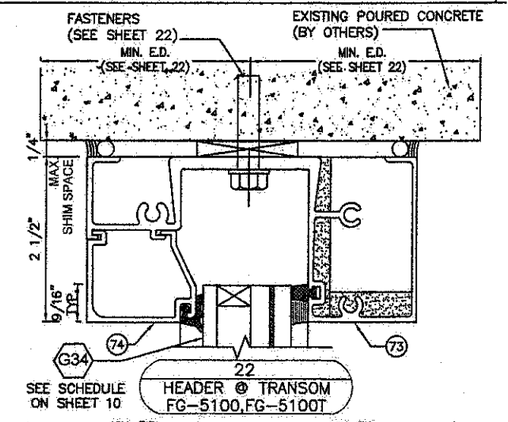

22
HEADER @ TRANSOM
FG-5100,FG-5100T

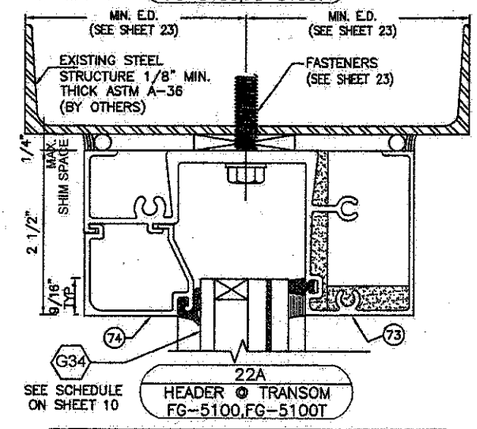

22A
HEADER @ TRANSOM
FG-5100,FG-5100T

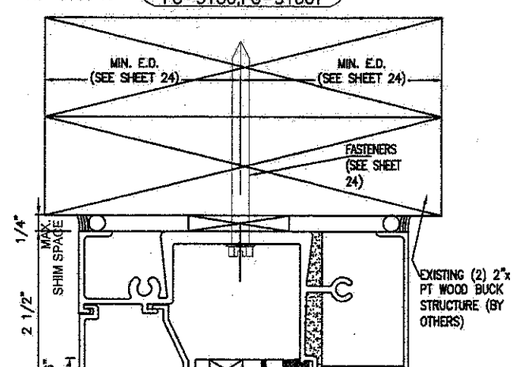

22B
HEADER @ TRANSOM
FG-5100,FG-5100T

TEXAS DEPARTMENT OF INSURANCE – 2006

SERIES MSD-375 (MEDIUM) & WSD-500 (WIDE)
STILE ALUMINUM ENTRANCE DOOR (WET GLAZED)
LARGE & SMALL MISSILE IMPACT

DRAWN BY: F.R.L.
DATE: 10/16/14
DRAWING No: 14-075
SHEET 21 OF 26

Oldcastle BuildingEnvelope
803 AIRPORT RD. TERRELL TX 75160
www.OldcastleBE.com-Phone 800-869-4567

REV. No	DATE	DESCRIPTION	REV. No	DATE	DESCRIPTION

WALTER A. TILLIT Jr P.E.
PROFESSIONAL ENGINEER
6355 N.W. 36 STREET, STE. 305
VIRGINIA GARDENS, FL. 33166
PHONE(305) 871-1531 FAX (305) 871-1531
TEXAS LIC. # 90691
FIRM REGISTRATION # F-13790

DOOR & DOOR JAMB MULLION ANCHORAGE TO CONCRETE (MIN f'c=3Ksi) & GROUT FILLED CONCRETE BLOCK
(VALID FOR 3'-6"x8'-0" & 7'-0"x8'-0" DOORS)

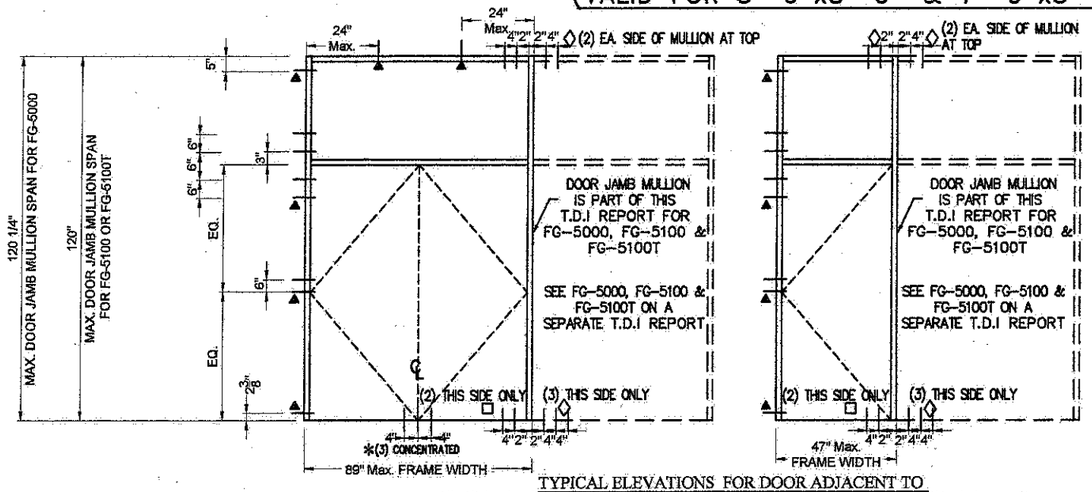

TYPICAL ELEVATIONS FOR DOOR ADJACENT TO
FG-5000, FG-5100 & FG-5100T ALUMINUM WINDOW WALL SYSTEM FRAMING

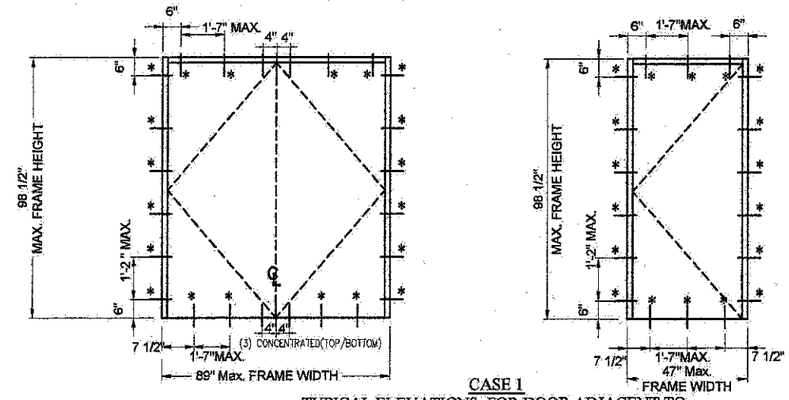

CASE 1
TYPICAL ELEVATIONS FOR DOOR ADJACENT TO
EXISTING STRUCTURE W/ DESIGN PRESSURE
RATING UP TO +70, -70 psf

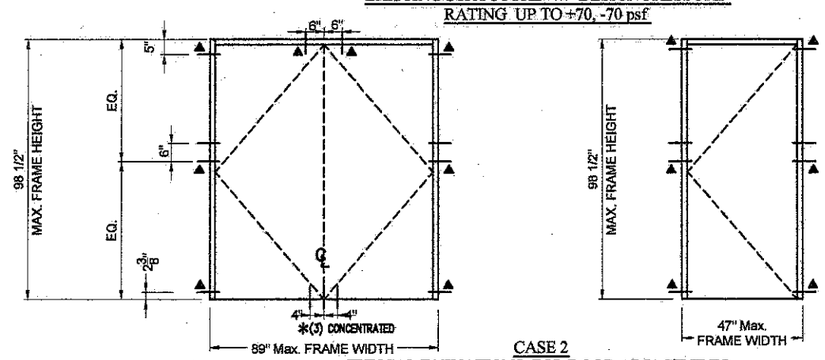

CASE 2
TYPICAL ELEVATIONS FOR DOOR ADJACENT TO
EXISTING STRUCTURE W/ DESIGN PRESSURE
RATING GREATER THAN +70, -70 psf, UP TO +70, -80 psf

FASTENERS LEGEND

- ▲ : AT JAMB,AT HEADER
- * : AT THRESHOLD, JAMB & HEAD (CASE 1) AT THRESHOLD (CASE 2)
- ◇ : AT MULLION AT TOP OR AT MULLION AT BOTTOM WINDOW WALL SIDE
- □ : AT MULLION THRESHOLD SIDE

FASTENERS TYPES AT ▲
(VALID FOR CONCRETE & GROUTED BLOCK)

B – 3/8"Ø POWER FASTENERS TAPPER ANCHOR W/ 1 3/4" Min. EMBEDMENT, W/ 4 1/2" MIN. EDGE DISTANCE, BEYOND ANY FINISH MATERIAL.

C – 3/8"Ø LTD ITW/RED HEAD SCREW ANCHOR W/ 2" Min. EMBEDMENT, W/ 4" MIN. EDGE DISTANCE, BEYOND ANY FINISH MATERIAL.

FASTENERS TYPE AT *
(VALID FOR CONCRETE & GROUTED BLOCK)

F – 1/4"Ø F.H. ELCO ULTRACON ANCHOR W/ 1 3/4" Min. EMBEDMENT, W/ 2 1/2" MIN. EDGE DISTANCE, BEYOND ANY FINISH MATERIAL.

FASTENERS TYPE AT ◇
(VALID FOR CONCRETE)

A – 3/8"Ø F.H. POWERS FASTENERS TAPPER SCREW ANCHOR W/ 2" MIN. EMBEDMENT INTO POURED CONCRETE (MIN. F'C = 3 KSI), W/ 4 1/2" MIN. EDGE DISTANCE, BEYOND ANY FINISH MATERIAL.

C' – 3/8"Ø LTD ITW/RED HEAD SCREW ANCHOR W/ 2" Min. EMBEDMENT, W/ 4" MIN. EDGE DISTANCE, BEYOND ANY FINISH MATERIAL..

FASTENERS TYPE AT □
(VALID FOR CONCRETE)

I – 3/8"Ø F.H. POWERS FASTENERS TAPPER SCREW ANCHOR W/ 1 3/4" MIN. EMBEDMENT INTO POURED CONCRETE (MIN. F'C = 3 KSI), W/ 6" MIN. EDGE DISTANCE, BEYOND ANY FINISH MATERIAL.

TEXAS DEPARTMENT OF INSURANCE – 2006

SERIES MSD-375 (MEDIUM) & WSD-500 (WIDE)
STILE ALUMINUM ENTRANCE DOOR (WET GLAZED)
LARGE & SMALL MISSILE IMPACT

DRAWN BY: F.R.L
DATE: 10/16/14
DRAWING No: 14-075
SHEET 22 OF 26

Oldcastle BuildingEnvelope
803 AIRPORT RD. TERRELL TX 75160
www.OldcastleBE.com-Phone 800-869-4567

REV. No.	DESCRIPTION	DATE	REV. No.	DESCRIPTION	DATE

WALTER A. TILLIT Jr P.E.
PROFESSIONAL ENGINEER
6355 N.W 36 STREET, STE. 305
VIRGINIA GARDENS, FL 33166
PHONE(305) 871-1530 FAX (305) 871-1531
TEXAS LIC. # 90691
FIRM REGISTRATION # F-13790

STATE OF TEXAS
WALTER A. TILLIT JR.
90691
10/17/14
P.E. SEAL/SIGNATURE/DATE

DOOR & DOOR JAMB MULLION ANCHORAGE TO MIN 1/8" THICK ASTM A-36 STEEL OR 12 GAGE ASTM-653, GRADE 33 STEEL (VALID FOR 3'-6"x8'-0" & 7'-0"x8'-0" DOORS)

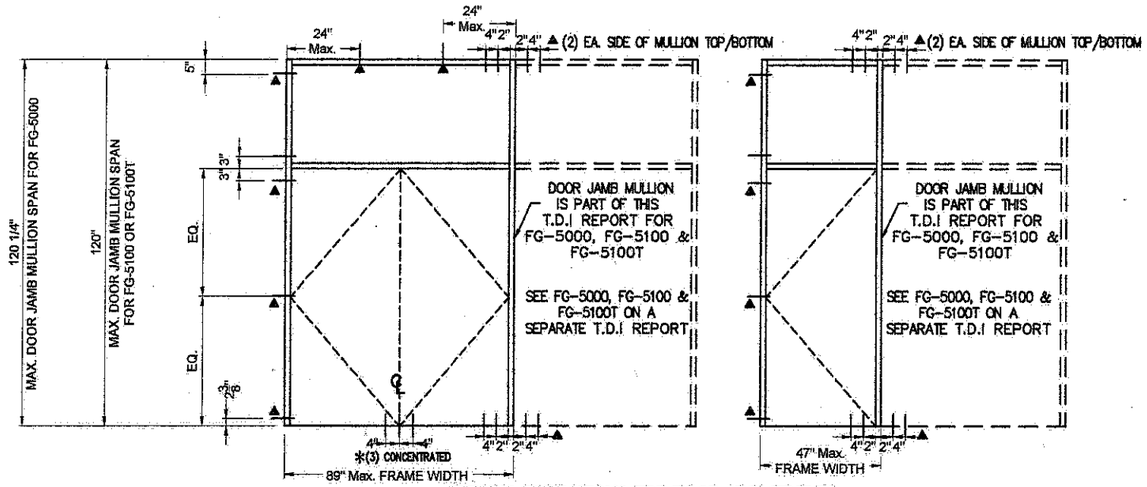

TYPICAL ELEVATIONS FOR DOOR ADJACENT TO FG-5000 & FG-5100 ALUMINUM WINDOW WALL SYSTEM FRAMING

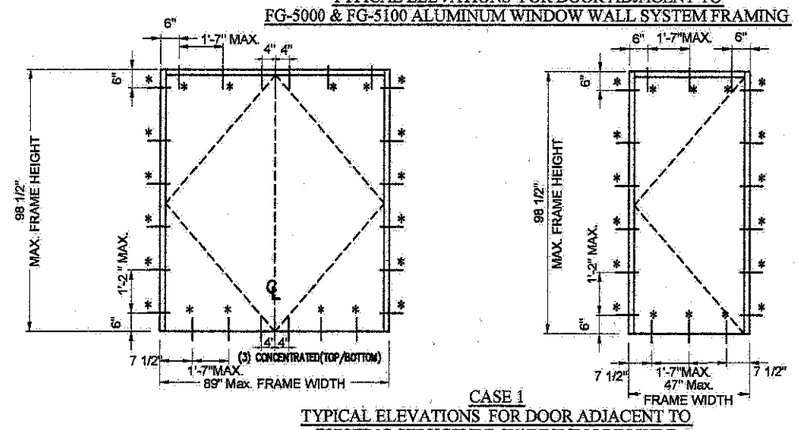

CASE 1
TYPICAL ELEVATIONS FOR DOOR ADJACENT TO EXISTING STRUCTURE W/ DESIGN PRESSURE RATING UP TO +70, -70 psf

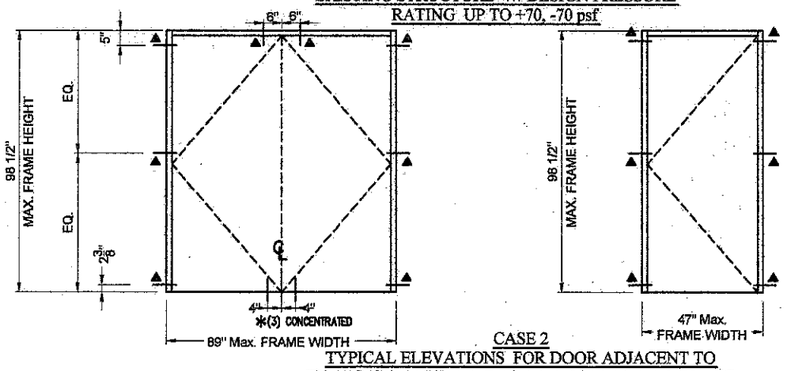

CASE 2
TYPICAL ELEVATIONS FOR DOOR ADJACENT TO EXISTING STRUCTURE W/ DESIGN PRESSURE RATING GREATER THAN +70, -70 psf, UP TO +70, -80 psf

FASTENERS LEGEND

▲ : AT JAMB & HEADER

* : AT THRESHOLD, JAMB & HEAD (CASE 1)
AT THRESHOLD (CASE 2)

FASTENERS TYPES AT ▲

D - 3/8"Ø H.H. TYPE "F" BOLT W/ 3/4" MIN. EDGE DISTANCE, BEYOND ANY FINISH MATERIAL. BOLT TO BE MIN. FULLY ENGAGED INTO PROFILE THICKNESS

FASTENERS TYPE AT *

G - 1/4"Ø-20 ELCO DRILL FLEX SELF DRILLING SCREWS W/ 1/2" MIN. EDGE DISTANCE, BEYOND ANY FINISH MATERIAL. FULLY ENGAGED INTO PROFILE THICKNESS

TEXAS DEPARTMENT OF INSURANCE - 2006

SERIES MSD-375 (MEDIUM) & WSD-500 (WIDE) STILE ALUMINUM ENTRANCE DOOR (WET GLAZED) LARGE & SMALL MISSILE IMPACT

DRAWN BY: F.R.L.
DATE: 10/16/14
DRAWING No: 14-075
SHEET 23 OF 26

Oldcastle BuildingEnvelope™
803 AIRPORT RD. TERRELL TX 75160
www.OldcastleBE.com - Phone: 800-869-4567

REV. No.	DESCRIPTION	DATE	REV. No.	DESCRIPTION	DATE

WALTER A. TILLIT Jr P.E.
PROFESSIONAL ENGINEER
6355 N.W. 36 STREET, STE. 305
VIRGINIA GARDENS, FL 33166
PHONE(305) 871-1530 FAX (305) 871-1531
TEXAS LIC. # 90691
FIRM REGISTRATION # F-13790

STATE OF TEXAS
10/15/14
P.E. SEAL/SIGNATURE/DATE

DOOR & DOOR JAMB MULLION ANCHORAGE TO WOOD (VALID FOR 3'-6"x8'-0" & 7'-0"x8'-0" DOORS)

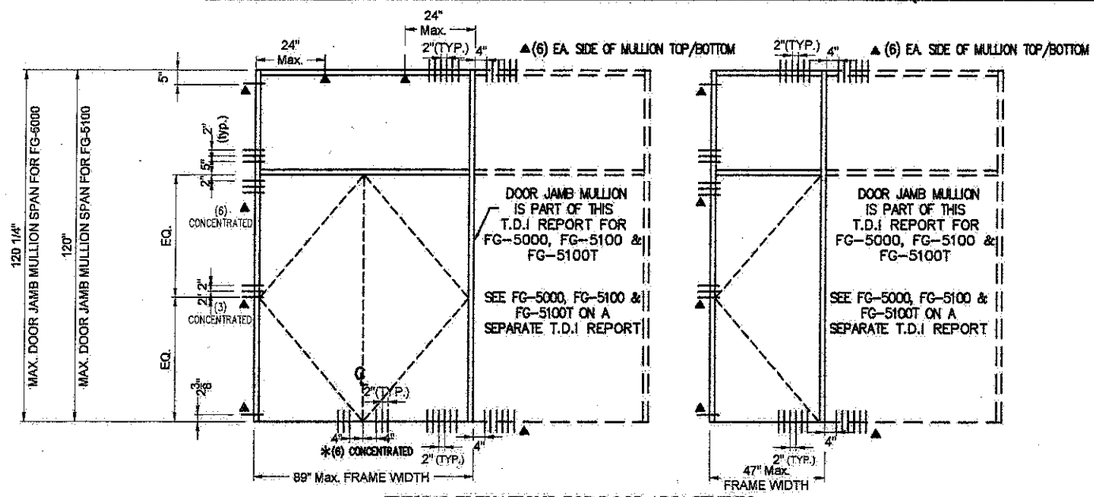

TYPICAL ELEVATIONS FOR DOOR ADJACENT TO FG-5000 & FG-5100 ALUMINUM WINDOW WALL SYSTEM FRAMING

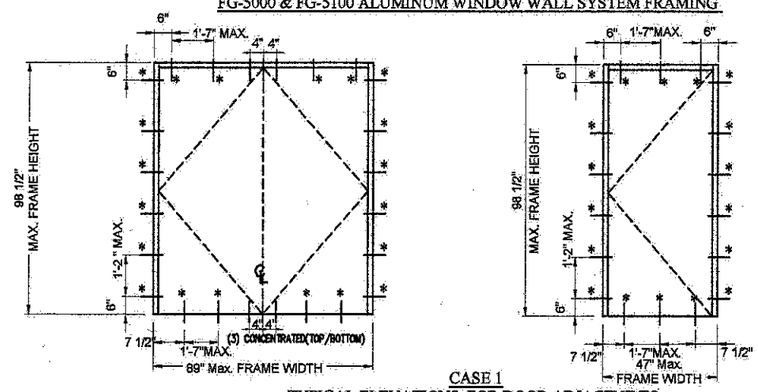

CASE 1
TYPICAL ELEVATIONS FOR DOOR ADJACENT TO EXISTING STRUCTURE W/ DESIGN PRESSURE RATING UP TO +70, -70 psf

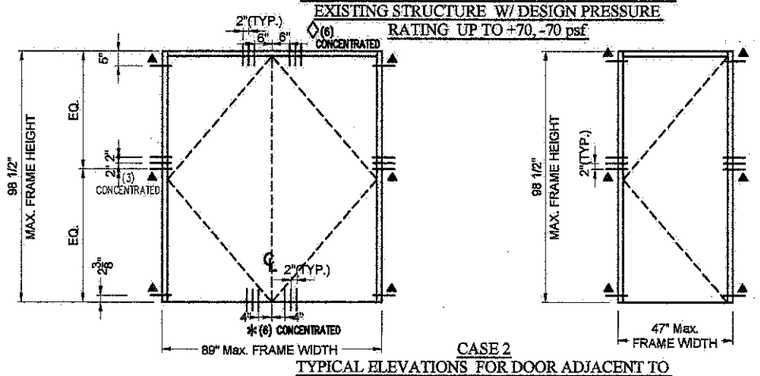

CASE 2
TYPICAL ELEVATIONS FOR DOOR ADJACENT TO EXISTING STRUCTURE W/ DESIGN PRESSURE RATING GREATER THAN +70, -70 psf, UP TO +70, -80 psf

FASTENERS LEGEND

▲ : AT JAMB, HEADER AND AT DOOR JAMB MULLION (TOP/BOTTOM)

* : AT THRESHOLD, JAMB & HEAD (CASE 1), INTO SINGLE 2x BUCK AT THRESHOLD (CASE 2), INTO DOUBLE 2x BUCK

FASTENERS TYPE AT ▲

E - 5/16"Ø LAG SCREWS TO DOUBLE 2x BUCK (G=0.55) W/ 3" Min. PENETRATION INTO WOOD W/ 1 1/2" MIN. EDGE DISTANCE, BEYOND ANY FINISH MATERIAL, OR 5/16"Ø ELCO ULTRACONS W/ 3" MIN. PENETRATION INTO DOUBLE 2xBUCK (G=0.55) W/ 1 1/2" MIN. EDGE DISTANCE, BEYOND ANY FINISH MATERIAL

FASTENERS TYPE AT *

H- 1/4"Ø ELCO ULTRACONS W/ 1 1/2" Min. PENETRATION INTO SINGLE 2x BUCK W/ 3" Min. PENETRATION INTO DOUBLE 2x BUCK W/ 1" MIN. EDGE DISTANCE, BEYOND ANY FINISH MATERIAL.

TEXAS DEPARTMENT OF INSURANCE – 2006

SERIES MSD-375 (MEDIUM) & WSD-500 (WIDE)
STILE ALUMINUM ENTRANCE DOOR (WET GLAZED)
LARGE & SMALL MISSILE IMPACT

DRAWN BY: F.R.L.
DATE 10/16/14
14-075 DRAWING No
SHEET 24 OF 26

Oldcastle BuildingEnvelope™
803 AIRPORT RD. TERRELL, TX 75160
www.OldcastleBE.com-Phone 800-869-4567

REV. No	DESCRIPTION	DATE	REV. No	DESCRIPTION	DATE

WALTER A. TILLIT Jr P.E.
PROFESSIONAL ENGINEER
6355 N.W. 36 STREET, STE. 305
VIRGINIA GARDENS, FL. 33166
PHONE(305) 871-1530 FAX (305) 871-1531
TEXAS LIC. # 90691
FIRM REGISTRATION # F-13790

STATE OF TEXAS
P.E. SEAL/SIGNATURE/DATE

TYPICAL EXTERIOR ELEVATIONS FOR MSD-375 & WSD-500 IMPACT DOOR (WET GLAZED) 4'-0"x8'-0" (SINGLE) & 8'-0"x8'-0"(PAIR OF DOORS) CONNECTED TO EXISTING STRUCTURE OR FG-5000, FG-5100 OR FG-5100T ALUMINUM WINDOW WALL SYSTEM FRAMING

MAX. PRESSURE RATING W/ LAMINATED & INSULATED GLASS IS +70, -70 psf

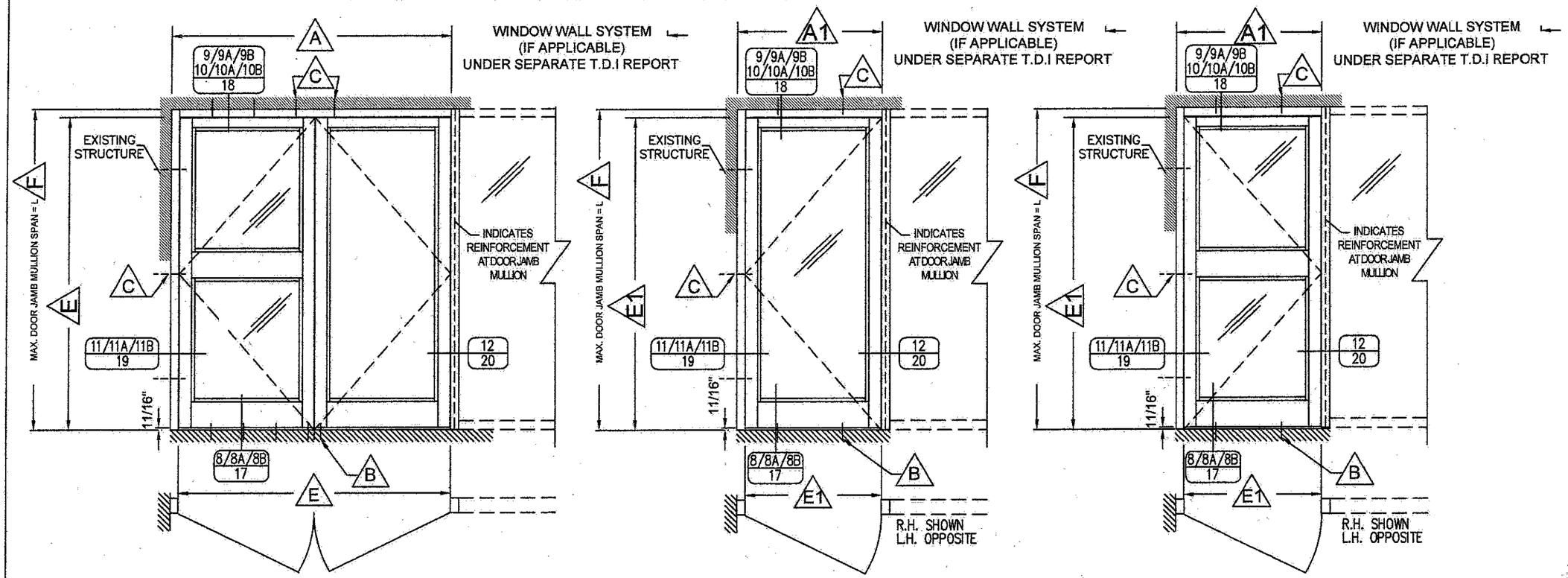

FOOT NOTES:

- (A) 101" MAX. DOOR FRAME WIDTH.
- (A1) 53" MAX. DOOR FRAME WIDTH.
- (B) FOR THRESHOLD FASTENERS QUANTITY, TYPES AND SPECS SEE SHEETS 26.
- (C) FOR JAMB & HEAD FASTENERS QUANTITY, TYPES AND SPECS SEE SHEET 26.
- (E) 96" MAXIMUM DOOR HEIGHT (D.O.) & 96" MAXIMUM DOOR WIDTH (D.O.).
- (E1) 96" MAXIMUM DOOR HEIGHT. (D.O & 48" MAXIMUM DOOR WIDTH. (D.O.).
- (F) 96" MAXIMUM DOOR JAMB MULLION SPAN 96" MAXIMUM DOOR FRAME HEIGHT.

TEXAS DEPARTMENT OF INSURANCE – 2006

SERIES MSD-375 (MEDIUM) & WSD-500 (WIDE) STILE ALUMINUM ENTRANCE DOOR (WET GLAZED) LARGE & SMALL MISSILE IMPACT

DRAWN BY: F.R.L.
DATE: 10/16/14
DRAWING No: 14-075
SHEET 25 OF 26

Oldcastle BuildingEnvelope™
803 AIRPORT RD. TERRELL, TX 75160
www.OldcastleBE.com-Phone 800-869-4567

REV. No.	DATE	DESCRIPTION	DATE

WALTER A. TILLIT Jr P.E.
PROFESSIONAL ENGINEER
6355 N.W 36 STREET, STE. 305
VIRGINIA GARDENS, FL 33166
PHONE(305) 871-1530 FAX (305) 871-1531
TEXAS LIC. # 90691
FIRM REGISTRATION # F-13790

P.E. SEAL/SIGNATURE/DATE

DOOR ANCHORAGE TO CONCRETE, CONCRETE BLOCK, STEEL AND WOOD SUBSTRATES
(VALID FOR 8'-0"x8'-0" & 4'-0"x8'-0" DOORS)

TYPICAL ELEVATIONS FOR DOOR ADJACENT TO FG-5000, FG-5100 & FG-5100T ALUMINUM WINDOW WALL SYSTEM FRAMING

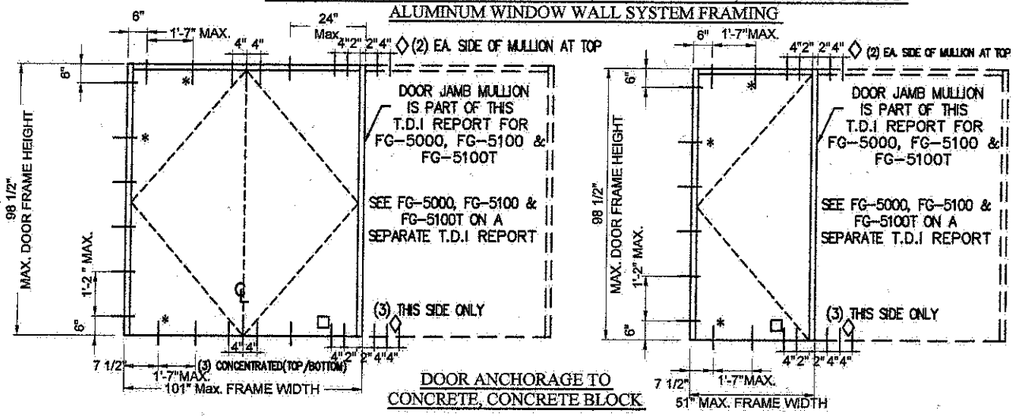

DOOR ANCHORAGE TO CONCRETE, CONCRETE BLOCK

TYPICAL ELEVATIONS FOR DOOR ADJACENT TO EXISTING STRUCTURE W/ DESIGN PRESSURE RATING UP TO +70, -70 psf

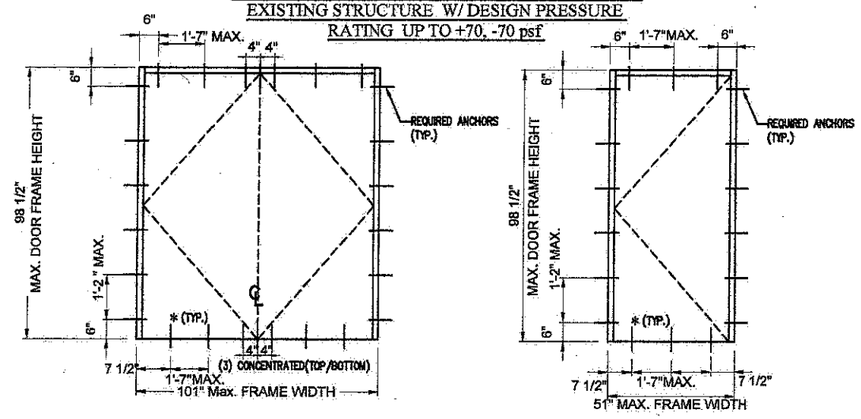

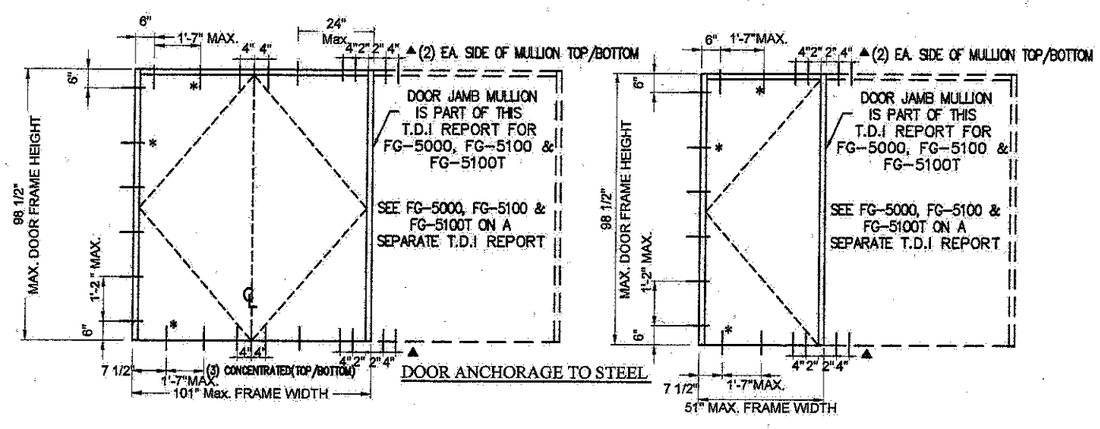

DOOR ANCHORAGE TO STEEL

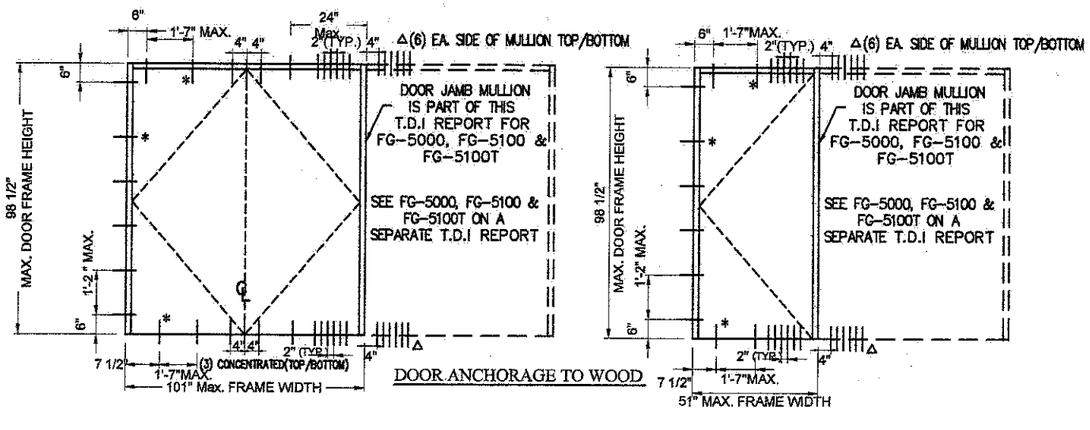

DOOR ANCHORAGE TO WOOD

ANCHORAGE TO (Min. f'c=3ksi) CONCRETE OR ASTM C-90 GROUTED FILLED CONCRETE BLOCK

REQUIRED ANCHOR:	LOCATION:
* 1/4"Ø F.H. ELCO ULTRACON ANCHOR W/ 1 3/4" Min. EMBEDMENT W/2 1/2" MIN. EDGE DISTANCE, BEYOND ANY FINISH MATERIAL.	AT HEAD , SILL & JAMBS OF DOOR
◊ 3/8"Ø F.H. POWERS FASTENERS TAPPER SCREW ANCHOR W/ 2" MIN. EMBEDMENT INTO POURED CONCRETE (MIN. F'C = 3 KSI), W/ 4 1/2" MIN. EDGE DISTANCE, BEYOND ANY FINISH MATERIAL.	AT HEAD & SILL OF DOOR JAMB MULLION AT WINDOW WALL SIDE
◊ 3/8"Ø LTD ITW/RED HEAD SCREW ANCHOR W/ 2" Min. EMBEDMENT, W/ 4" MIN. EDGE DISTANCE, BEYOND ANY FINISH MATERIAL..	AT HEAD & SILL OF DOOR JAMB MULLION AT WINDOW WALL SIDE
□ 3/8"Ø F.H. POWERS FASTENERS TAPPER SCREW ANCHOR W/ 1 3/4" MIN. EMBEDMENT INTO POURED CONCRETE (MIN. F'C = 3 KSI), W/ 6" MIN. EDGE DISTANCE, BEYOND ANY FINISH MATERIAL.	AT HEAD & SILL OF DOOR JAMB MULLION AT DOOR SIDE

ANCHORAGE TO 1/8" THICK ASTM A-36 STEEL OR 12 GAGE, ASTM A-653, GRADE 33 STEEL

REQUIRED ANCHOR:	LOCATION:
* 1/4"Ø-20 F.H. ELCO DRILL FLEX SELF DRILLING SCREWS W/ 1/2" MIN. EDGE DISTANCE BEYOND ANY FINISH MATERIAL. SCREWS TO BE MIN. FULLY ENGAGED INTO PROFILE THICKNESS.	AT HEAD , SILL & JAMBS OF DOOR
▲ 3/8"Ø H.H. TYPE "F" BOLT W/ 3/4" MIN. EDGE DISTANCE, BEYOND ANY FINISH MATERIAL. BOLT TO BE MIN. FULLY ENGAGED INTO PROFILE THICKNESS	AT HEAD & SILL OF DOOR JAMB MULLION AT EITHER SIDE OF MULLION

ANCHORAGE INTO G=0.55 MIN. WOOD

REQUIRED ANCHOR:	LOCATION:
* #14 F.H. WOOD SCREWS OR 1/4"Ø ELCO ULTRACON TO SINGLE 2x BUCK W/ 1 1/2" MIN. PENETRATION W/ 1" MIN. EDGE DISTANCE, BEYOND ANY FINISH MATERIAL.	AT HEAD , SILL & JAMBS OF DOOR
△ 5/16"Ø LAG SCREWS TO DOUBLE 2x BUCK (G=0.55) W/ 3" Min. PENETRATION INTO WOOD W/ 1 1/2" MIN. EDGE DISTANCE, BEYOND ANY FINISH MATERIAL, OR 5/16"Ø ELCO ULTRACONS W/ 3" MIN. PENETRATION INTO DOUBLE 2xBUCK (G=0.55) W/ 1 1/2" MIN. EDGE DISTANCE, BEYOND ANY FINISH MATERIAL	AT HEAD & SILL OF DOOR JAMB MULLION AT EITHER SIDE OF MULLION

TEXAS DEPARTMENT OF INSURANCE - 2006

SERIES MSD-375 (MEDIUM) & WSD-500 (WIDE)
STILE ALUMINUM ENTRANCE DOOR (WET GLAZED)
LARGE & SMALL MISSILE IMPACT

DRAWN BY: F.R.L.
DATE: 10/16/14
DRAWING No: 14-075
SHEET 26 OF 26

Oldcastle BuildingEnvelope™
803 AIRPORT RD. TERRELL, TX 75160
www.Oldcastle-BE.com-Phone 800-869-4567

WALTER A. TILLIT Jr P.E.
PROFESSIONAL ENGINEER
6355 N.W 36 STREET, STE. 305
VIRGINIA GARDENS, FL 33166
PHONE(305) 871-1530 FAX (305) 871-1531
TEXAS LIC. # 90691
FIRM REGISTRATION # F-13790

REV. No	DESCRIPTION	DATE	REV. No	DESCRIPTION	DATE

P.E. SEAL/SIGNATURE/DATE