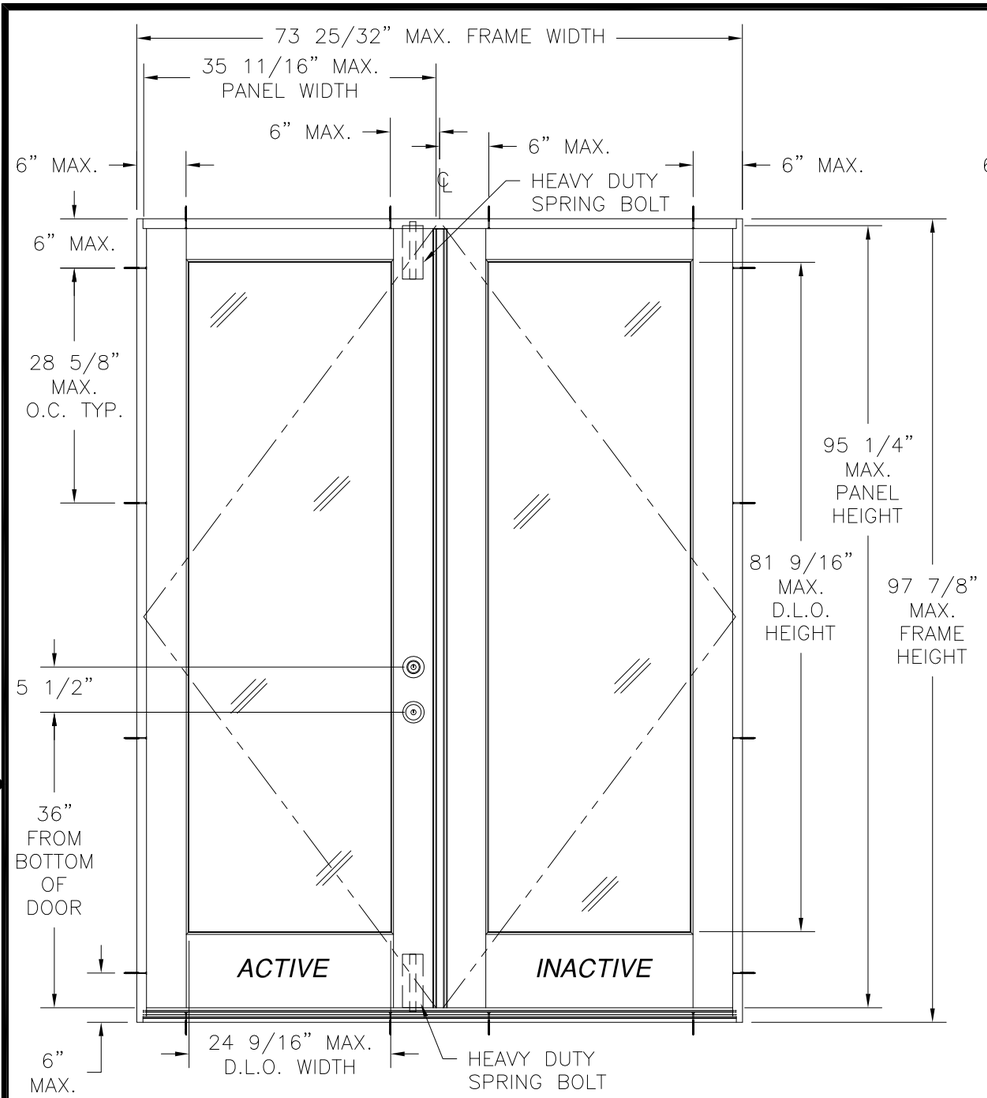

SERIES LE CHATEAU/ARTISAN WOOD IS DOUBLE DOOR

EXTERIOR VIEW

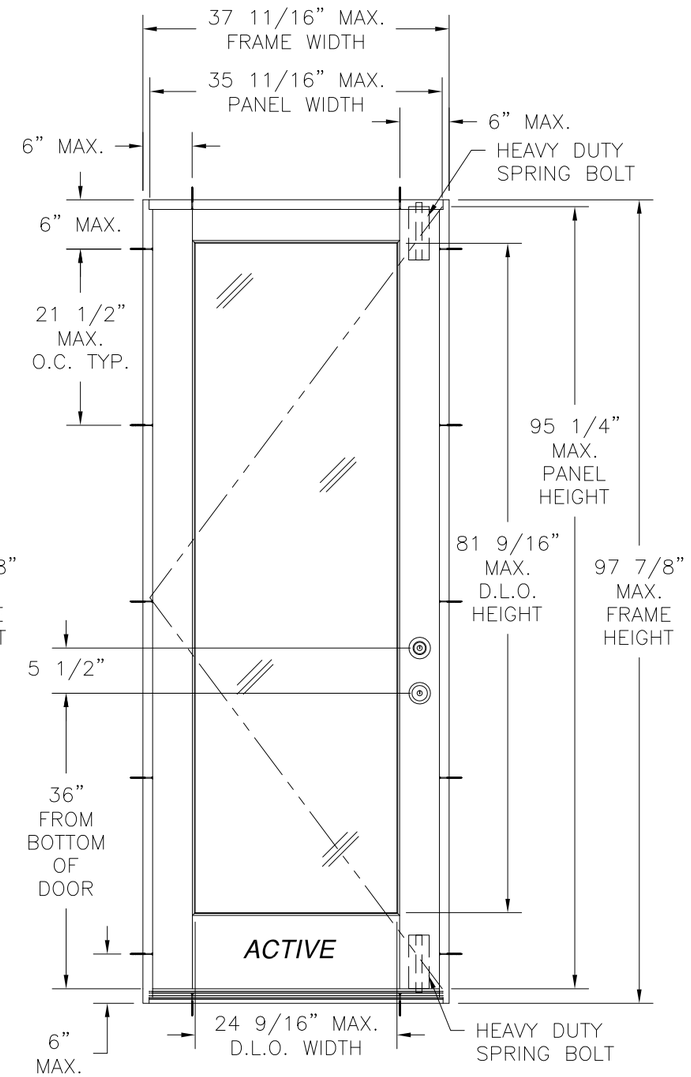

SERIES LE CHATEAU/ARTISAN WOOD IS SINGLE DOOR

EXTERIOR VIEW

REVISIONS			
REV	DESCRIPTION	DATE	APPROVED

NOTES:

1) THE PRODUCT SHOWN HEREIN IS DESIGNED AND MANUFACTURED TO COMPLY WITH REQUIREMENTS OF THE 2006 INTERNATIONAL BUILDING CODE AND 2006 INTERNATIONAL RESIDENTIAL CODE WITH TEXAS STATE MODIFICATIONS.
2) WOOD FRAMING AND MASONRY OPENING TO BE DESIGNED AND ANCHORED TO PROPERLY TRANSFER ALL LOADS TO STRUCTURE. WOOD FRAMING AND MASONRY OPENING IS THE RESPONSIBILITY OF THE ARCHITECT OR ENGINEER OF RECORD.
3) 1X BUCK OVER MASONRY/CONCRETE IS OPTIONAL. WHERE 1X BUCK IS NOT USED DISSIMILAR MATERIALS MUST BE SEPARATED WITH APPROVED COATING OR MEMBRANE. SELECTION OF COATING OR MEMBRANE IS THE RESPONSIBILITY OF THE ARCHITECT OR ENGINEER OF RECORD.
4) APPROVED IMPACT PROTECTIVE SYSTEM IS REQUIRED FOR THIS PRODUCT IN WIND BORNE DEBRIS REGIONS.
5) UNITS MUST BE GLAZED PER ASTM E1300.
6) ALLOWABLE STRESS INCREASE OF 1/3 WAS NOT USED IN THE DESIGN OF THE PRODUCT SHOWN HEREIN. WIND LOAD DURATION FACTOR Cd=1.6 WAS USED FOR WOOD ANCHOR CALCULATIONS.
7) FRAME MATERIAL: WOOD WITH G .42 MINIMUM SPECIFIC GRAVITY.
8) DOOR PANEL MATERIAL: FINGER JOINTED PINE OR LVL CORE WITH SOLID VENEER.
9) REFER TO CHART IN SHEET 3 FOR APPROVED PANELS. ALL APPROVED DOOR PANELS MUST HAVE A 5 1/2" OR WIDER SIDE STILE, 8 15/16" OR WIDER BOTTOM RAIL, 4 1/8" OR WIDER TOP RAIL WITH A ATTACHMENT GROOVE DEPTH OF 1.367" MINIMUM. ALL APPROVED DOOR PANELS MUST BE MANUFACTURED BY LEMIEUX DOORS.
10) UNITS MAY BE INSTALLED WITH SIMULATED MUNTINS

DESIGN PRESSURE RATING	*IMPACT RATING*
±50PSF	*NONE*
THIS SYSTEM WAS NOT TESTED FOR WATER INFILTRATION AND IS TO BE INSTALLED ONLY WHERE THE WATER REQUIREMENT IS NOT NEEDED	

DOORS MAYBE FULLY GLAZED AS SHOWN, PARTIALLY PANELED OR FULLY PANELED
SEE SHEET 3 FOR APPROVED PANELS

TABLE OF CONTENTS

SHEET NO.	DESCRIPTION
1 – 2	ELEVATIONS, ANCHORING LAYOUTS AND NOTES
3	HARDWARE AND DETAILS
4 – 7	INSTALLATION DETAILS

SIGNED: 04/12/2011

LEMIEUX DOORS, INC.
350, RUE PARC INDUSTRIAL
WINDSOR, QUEBEC J1S 1T2

SERIES LE CHATEAU/ARTISAN DOORS 4–9/16" FRAME
GLAZED/OPAQUE IS/OS NON–IMPACT
IS ELEVATIONS, ANCHORING LAYOUTS AND NOTES

DRAWN:	DWG NO.	REV
TJH	08–01086	–

SCALE	DATE	SHEET
NTS	03/03/11	1 OF 7

Luis R. Lomas P.E.
Texas No. 101889

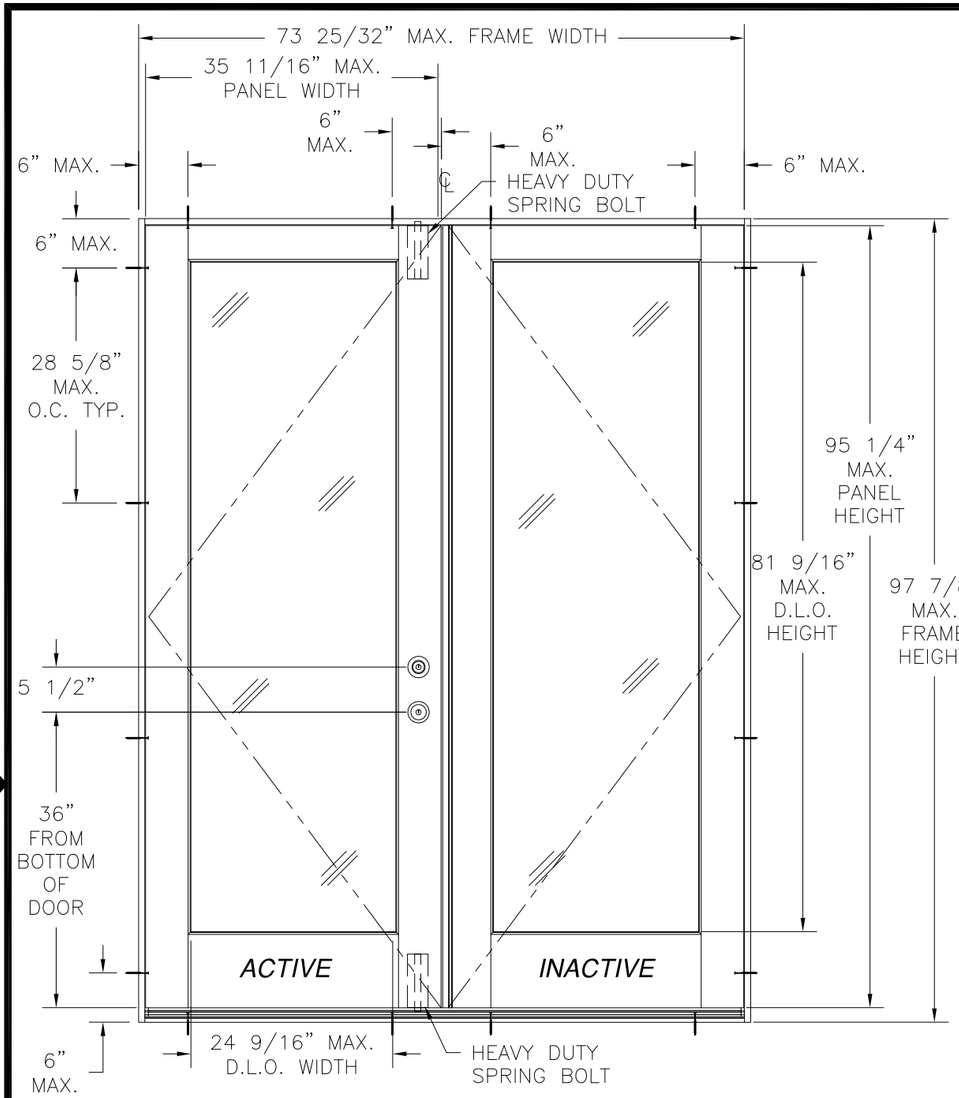

SERIES LE CHATEAU/ARTISAN WOOD OS DOUBLE DOOR

EXTERIOR VIEW

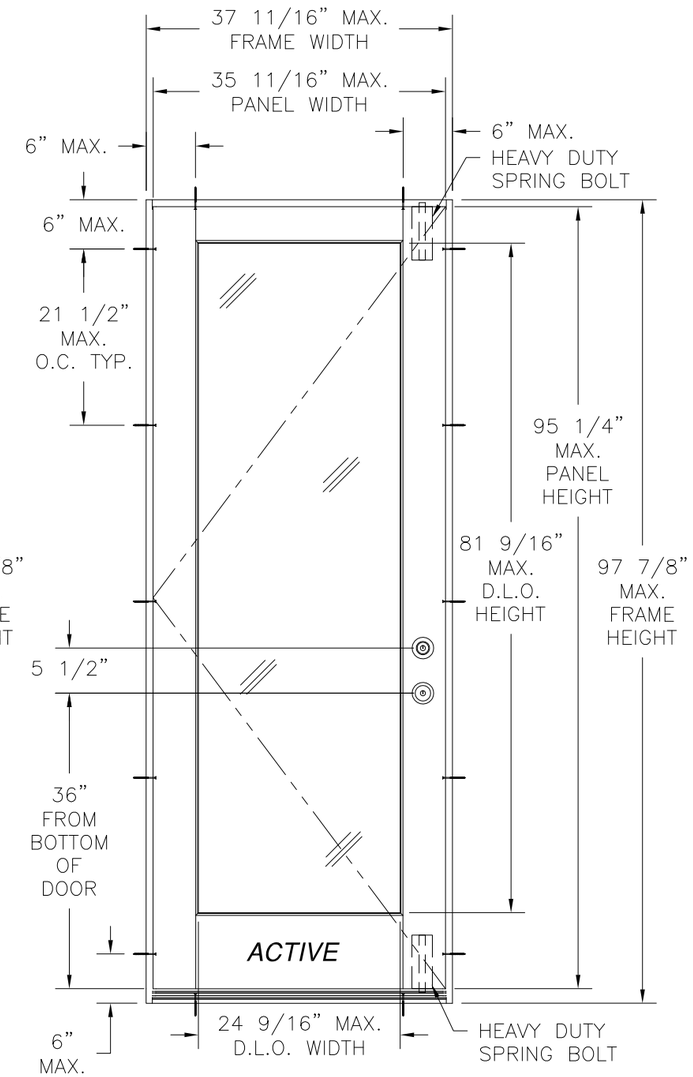

SERIES LE CHATEAU/ARTISAN WOOD OS SINGLE DOOR

EXTERIOR VIEW

REVISIONS			
REV	DESCRIPTION	DATE	APPROVED

NOTES:

1) SHIM AS REQUIRED AT EACH INSTALLATION ANCHOR WITH LOAD BEARING SHIM. SHIM WHERE SPACE OF 1/16" OR GREATER OCCURS. MAXIMUM ALLOWABLE SHIM STACK TO BE 1/4".
2) FOR ANCHORING INTO 2X BUCK OR WOOD FRAMING USE #8 WOOD SCREW OF SUFFICIENT LENGTH TO ACHIEVE A 1 3/16" MINIMUM EMBEDMENT INTO SUBSTRATE. LOCATE ANCHORS AS SHOWN IN ANCHORING LAYOUT AND INSTALLATION DETAILS.
3) FOR ANCHORING INTO MASONRY/CONCRETE USE 3/16" ITW TAPCON OF SUFFICIENT LENGTH TO ACHIEVE A 1 1/4" MINIMUM EMBEDMENT INTO SUBSTRATE WITH 2 5/8" MINIMUM EDGE DISTANCE. LOCATE ANCHORS AS SHOWN IN ANCHORING LAYOUT AND INSTALLATION DETAILS.
4) ALL FASTENERS TO BE CORROSION RESISTANT.
5) INSTALLATION ANCHOR CAPACITIES FOR PRODUCTS HEREIN ARE BASED ON SUBSTRATE MATERIAL WITH THE FOLLOWING PROPERTIES:
   A. WOOD – G=0.42 MINIMUM SPECIFIC GRAVITY
   B. CONCRETE – 2,000PSI MINIMUM COMPRESSIVE STRENGTH.
   C. MASONRY – STRENGTH CONFORMANCE TO ASTM C–90, GRADE N, TYPE 1 (OR GREATER).

HARDWARE SCHEDULE
A. KEYED ENTRY LOCK WB530P32DVC BY WEISER
B. DEADBOLT SET WDB2470Z32DVC BY WEISER
C. (2) HEAVY–DUTY SPRING BOLT 76–3808/CD1088 BY STANLEY
D. INSWING ULTIMATE ASTRAGAL BY ENDURA.
E. OUTSWING ULTIMATE ASTRAGAL BY ENDURA.
F. 4" x 4" BUTT TYPE HINGE (4 PER 8'0 DOORS).
G. INSWING SILL BY ENDURA
H. OUTSWING SILL BY ENDURA

DESIGN PRESSURE RATING	*IMPACT RATING*
±50PSF	*NONE*
THIS SYSTEM WAS NOT TESTED FOR WATER INFILTRATION AND IS TO BE INSTALLED ONLY WHERE THE WATER REQUIREMENT IS NOT NEEDED	

SEE SHEET 3 FOR APPROVED PANELS

LEMIEUX DOORS, INC.
350, RUE PARC INDUSTRIAL
WINDSOR, QUEBEC J1S 1T2

SERIES LE CHATEAU/ARTISAN DOORS 4–9/16" FRAME
GLAZED/OPAQUE IS/OS NON–IMPACT
OS ELEVATIONS, ANCHORING LAYOUTS AND NOTES

DRAWN:	DWG NO.	REV
TJH	08–01086	–
SCALE NTS	DATE 03/03/11	SHEET 2 OF 7

Luis R. Lomas P.E.
Texas No. 101889

DOOR PANEL TYPE		D.L.O. SIZE	DESIGN PRESSURE RATING	IMPACT RATING
ARTISAN 1020	GLAZED	16" x 37"	50.0PSF	NONE
ARTISAN 117		24 91/6" x 42 13/16"		
ARTISAN 118		24 91/6" x 51 15/16"		
ARTISAN 122		24 91/6" x 51 15/16"		
ARTISAN 144		24 91/6" x 51 15/16"		
ARTISAN 2008		24 91/6" x 26 13/16"		
ARTISAN 2071		24 91/6" x 51 15/16"		
ARTISAN 2081		24 91/6" x 51 15/16"		
ARTISAN 2611		24 9/16" x 18 1/4"		
ARTISAN 2612		24 9/16" x 18 1/4"		
ARTISAN 2613		24 9/16" x 18 1/4"		
ARTISAN 501		24 91/6" x 60 5/8"		
ARTISAN 521		24 91/6" x 60 5/8"		
ARTISAN 531		24 91/6" x 60 5/8"		
LE CHATEU C11	OPAQUE	N/A		
LE CHATEU C21				
LE CHATEU C22				
LE CHATEU C24				
LE CHATEU C25				
LE CHATEU C26				
LE CHATEU C30				
LE CHATEU C31				
LE CHATEU C32				
LE CHATEU C33				
LE CHATEU C34				
LE CHATEU C35				
LE CHATEU C36				
LE CHATEU C37				
LE CHATEU C38				
LE CHATEU C39				
LE CHATEU C40				
LE CHATEU C41				
LE CHATEU C411				
LE CHATEU C42				
LE CHATEU C422				
LE CHATEU C43				
LE CHATEU C44				
LE CHATEU C45				
LE CHATEU C46				
LE CHATEU C47				
LE CHATEU C48				
LE CHATEU C49				
LE CHATEU C51				
LE CHATEU C52				
LE CHATEU C53				
LE CHATEU C54				
LE CHATEU C55				
LE CHATEU C56				
LE CHATEU C57				
LE CHATEU C60				
LE CHATEU C61				
LE CHATEU C62				
LE CHATEU C63				
LE CHATEU C64				
LE CHATEU C66				
LE CHATEU C67				
LE CHATEU C88				

REVISIONS			
REV	DESCRIPTION	DATE	APPROVED

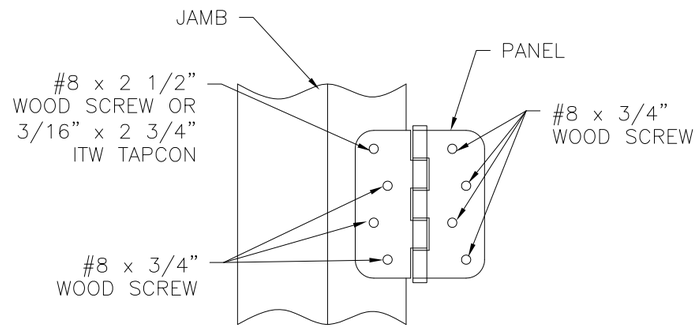

HINGE ATTACHMENT DETAIL

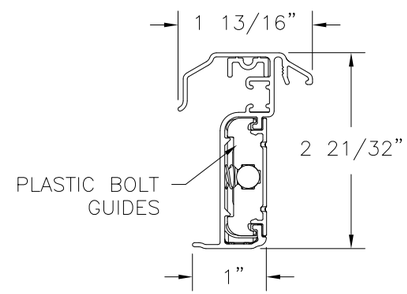

ENDURA INSWING/OUTSWING ULTIMATE ASTRAGAL

ALUMINUM 6063-T6 .062" THICK

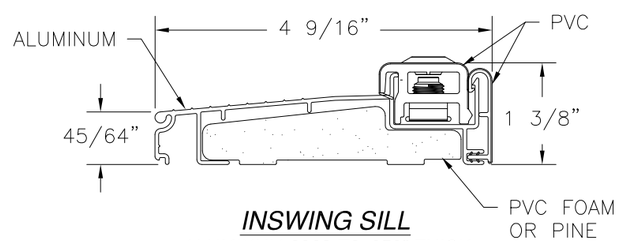

INSWING SILL

ALUMINUM 6063-T6 .050" THICK

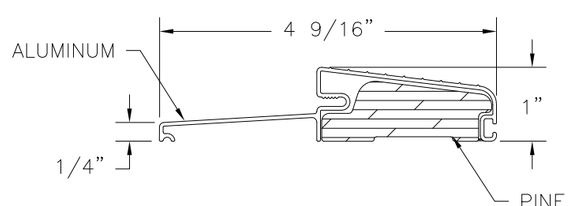

OUTSWING SILL

ALUMINUM 6063-T6 .050" THICK

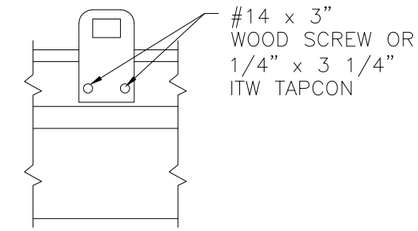

HEAVY DUTY SPRING BOLT

INSWING SILL STRIKE DETAIL

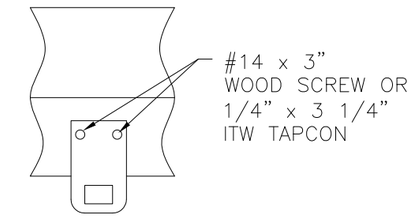

HEAVY DUTY SPRING BOLT

INSWING HEAD STRIKE DETAIL

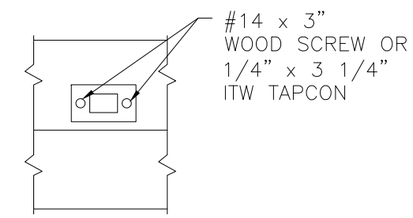

HEAVY DUTY SPRING BOLT

OUTSWING SILL STRIKE DETAIL

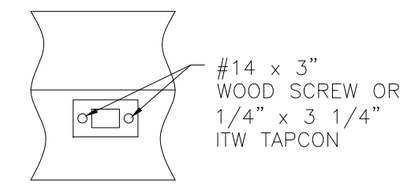

HEAVY DUTY SPRING BOLT

OUTSWING HEAD STRIKE DETAIL

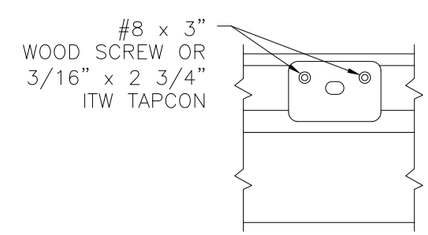

ASTRAGAL SILL STRIKE DETAIL

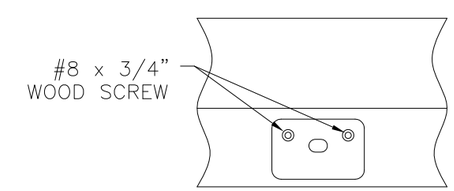

ASTRAGAL HEAD STRIKE DETAIL

LEMIEUX DOORS, INC.
350, RUE PARC INDUSTRIAL
WINDSOR, QUEBEC J1S 1T2

SERIES LE CHATEAU/ARTISAN DOORS 4-9/16" FRAME
GLAZED/OPAQUE IS/OS NON-IMPACT
HARDWARE AND DETAILS

DRAWN:	DWG NO.	REV
TJH	08-01086	–

SCALE	DATE	SHEET
NTS	03/03/11	3 OF 7

STATE OF TEXAS
LUIS R. LOMAS
101889
LICENSED
PROFESSIONAL ENGINEER

Luis R. Lomas P.E.
Texas No. 101889

REVISIONS			
REV	DESCRIPTION	DATE	APPROVED

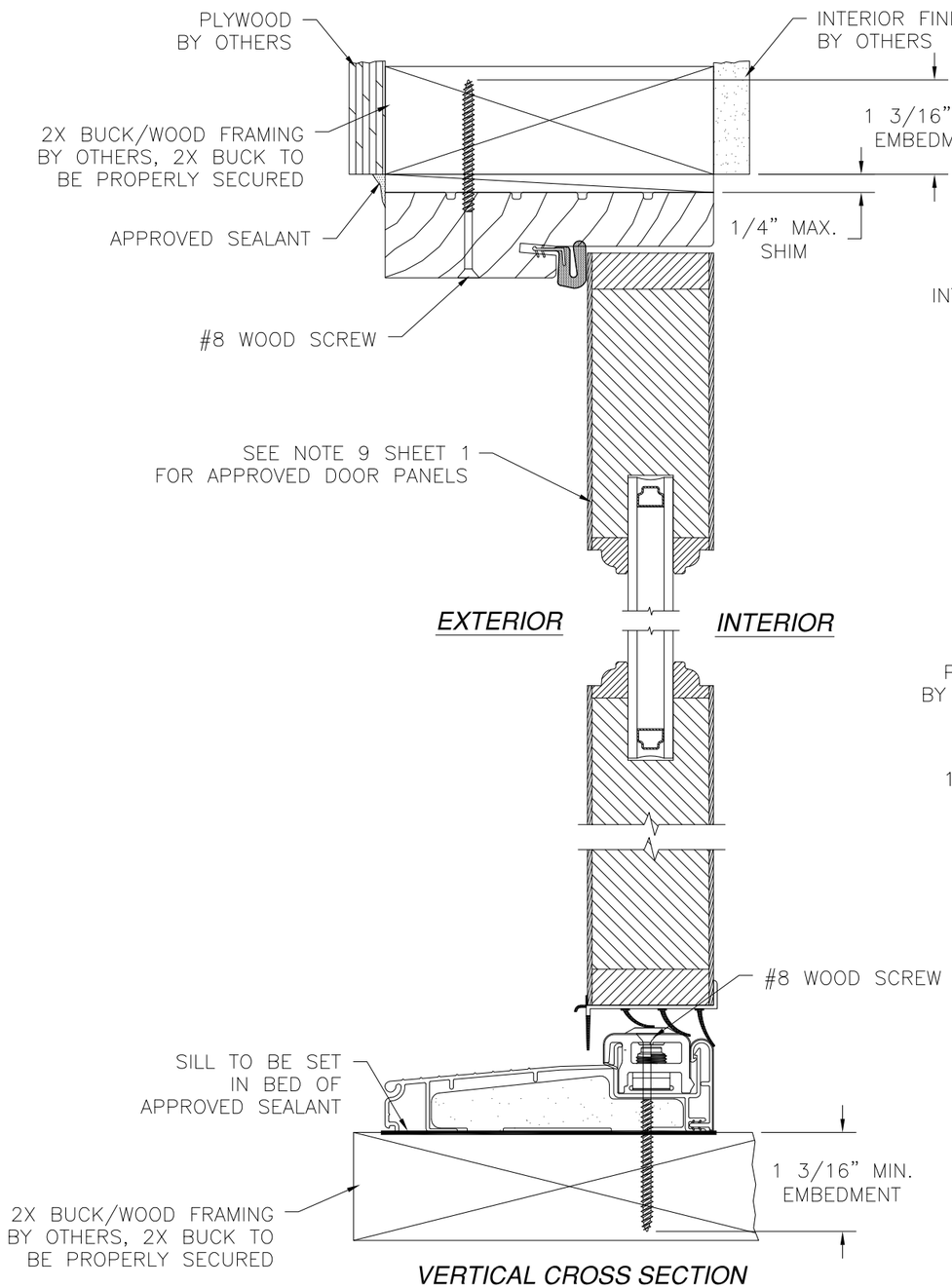

VERTICAL CROSS SECTION
2X BUCK/WOOD FRAMING INSTALLATION

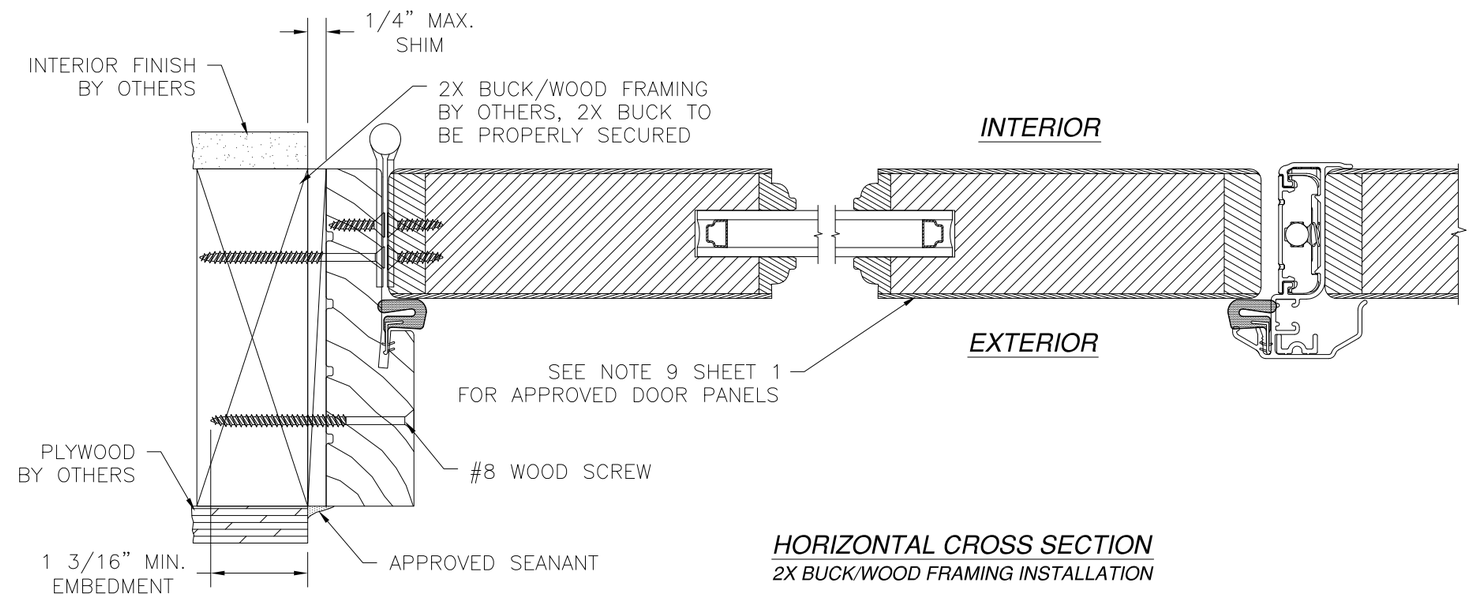

HORIZONTAL CROSS SECTION
2X BUCK/WOOD FRAMING INSTALLATION

LEMIEUX DOORS, INC.
350, RUE PARC INDUSTRIAL
WINDSOR, QUEBEC J1S 1T2

SERIES LE CHATEAU/ARTISAN DOORS 4-9/16" FRAME
GLAZED/OPAQUE IS/OS NON-IMPACT
INSWING INSTALLATION DETAILS

DRAWN:	DWG NO.	REV
TJH	08-01086	–
SCALE NTS	DATE 03/03/11	SHEET 4 OF 7

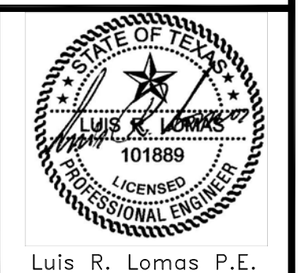

Luis R. Lomas P.E.
Texas No. 101889

REVISIONS			
REV	DESCRIPTION	DATE	APPROVED

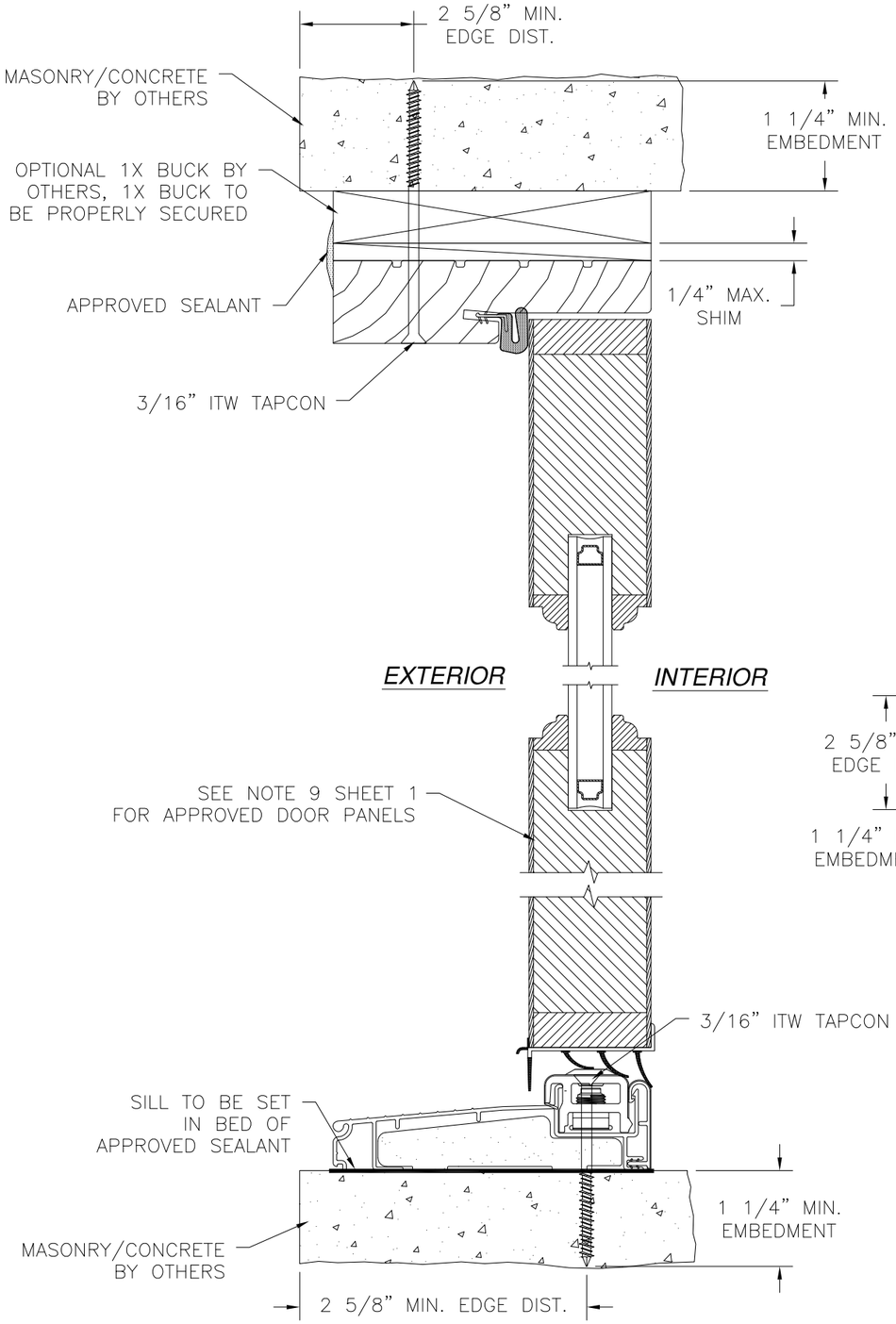

VERTICAL CROSS SECTION
MASONRY/CONCRETE INSTALLATION

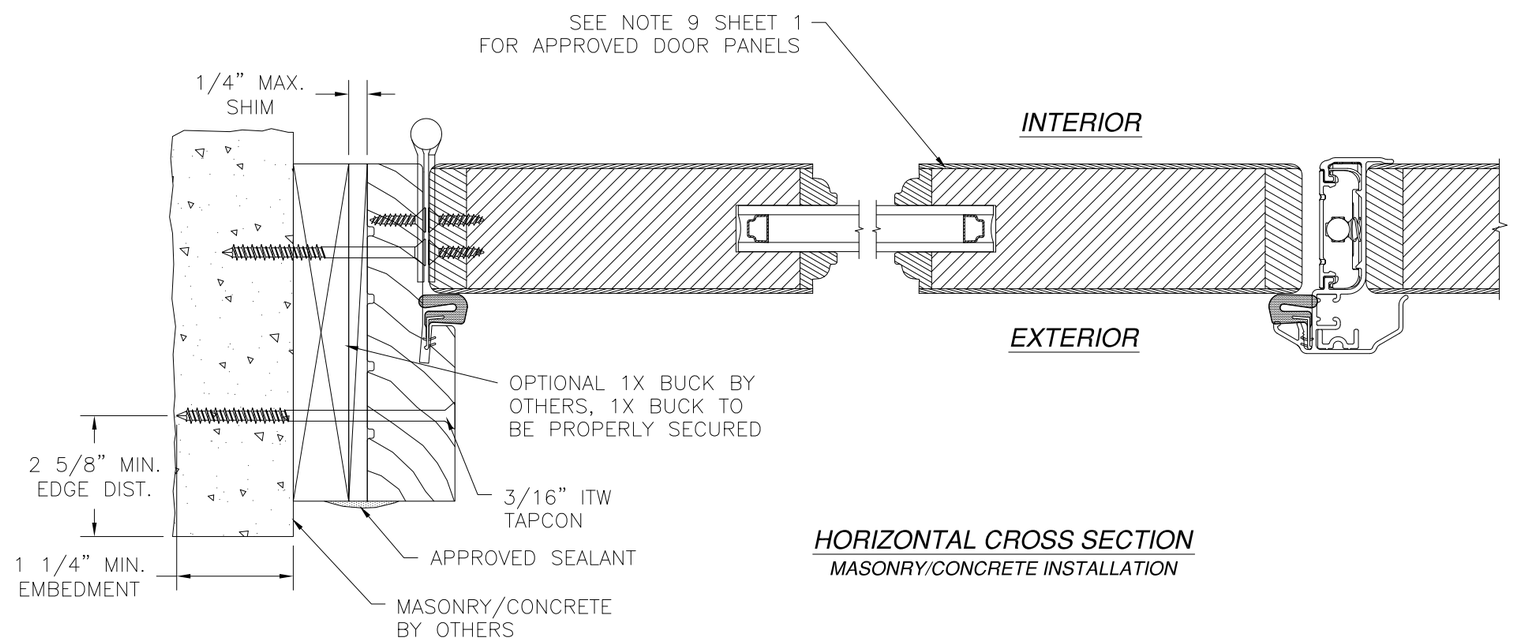

HORIZONTAL CROSS SECTION
MASONRY/CONCRETE INSTALLATION

LEMIEUX DOORS, INC.
350, RUE PARC INDUSTRIAL
WINDSOR, QUEBEC J1S 1T2

SERIES LE CHATEAU/ARTISAN DOORS 4-9/16" FRAME
GLAZED/OPAQUE IS/OS NON-IMPACT
INSWING INSTALLATION DETAILS

DRAWN:	DWG NO.	REV
TJH	08-01086	–
SCALE NTS	DATE 03/03/11	SHEET 5 OF 7

Luis R. Lomas P.E.
Texas No. 101889

REVISIONS			
REV	DESCRIPTION	DATE	APPROVED

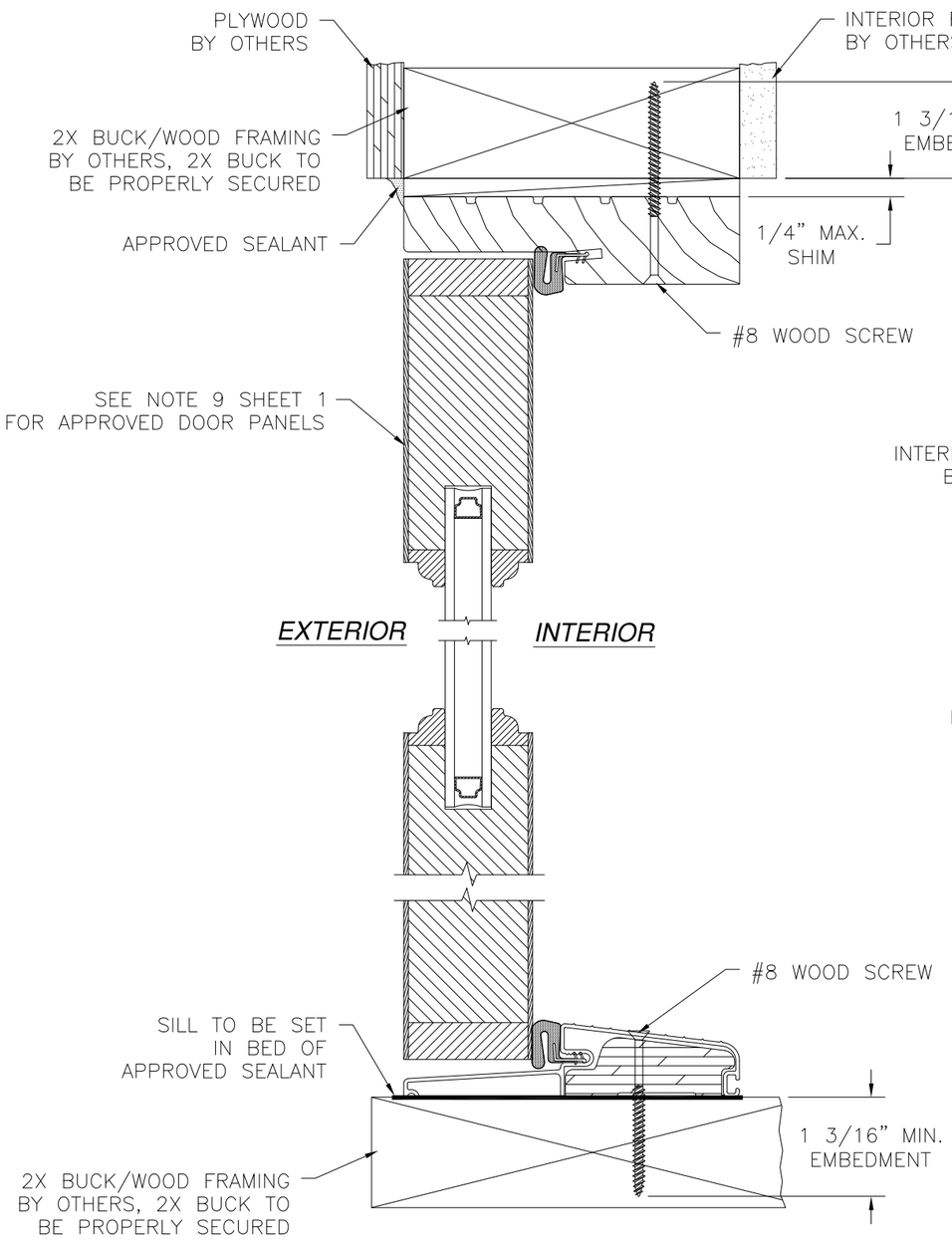

VERTICAL CROSS SECTION
2X BUCK/WOOD FRAMING INSTALLATION

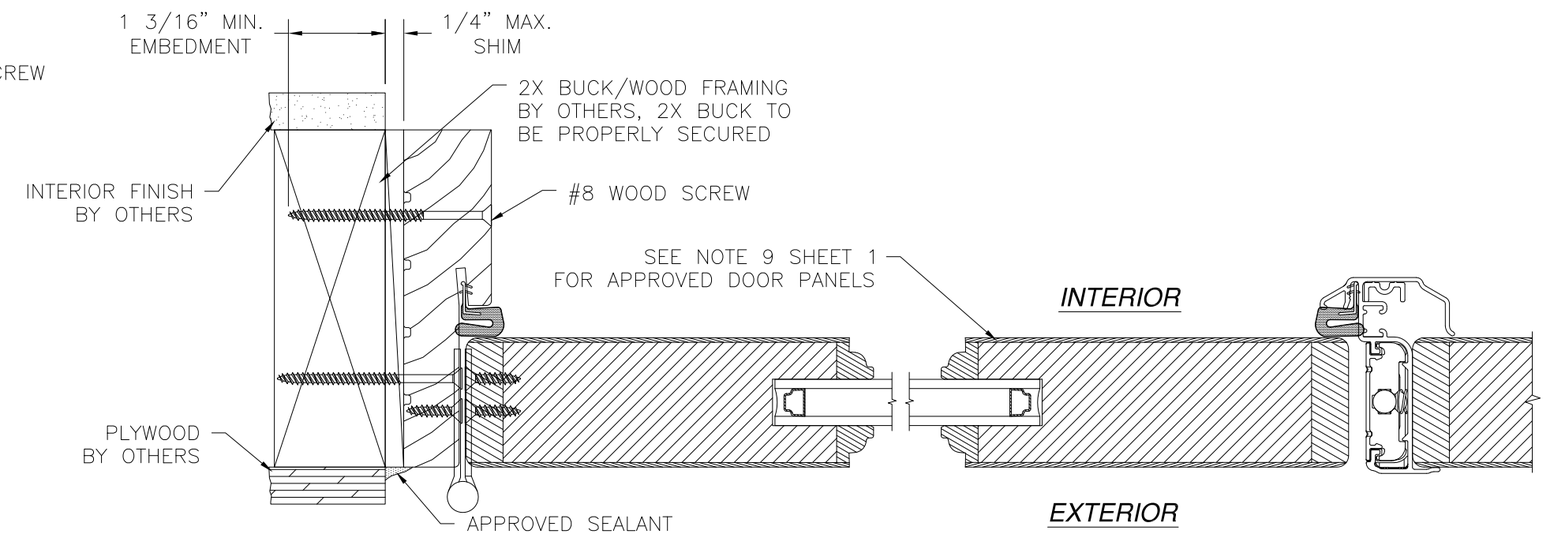

HORIZONTAL CROSS SECTION
2X BUCK/WOOD FRAMING INSTALLATION

LEMIEUX DOORS, INC.
350, RUE PARC INDUSTRIAL
WINDSOR, QUEBEC J1S 1T2

SERIES LE CHATEAU/ARTISAN DOORS 4-9/16" FRAME
GLAZED/OPAQUE IS/OS NON-IMPACT
OUTSWING INSTALLATION DETAILS

DRAWN:	DWG NO.	REV
TJH	08-01086	–
SCALE NTS	DATE 03/03/11	SHEET 6 OF 7

Luis R. Lomas P.E.
Texas No. 101889

REVISIONS			
REV	DESCRIPTION	DATE	APPROVED

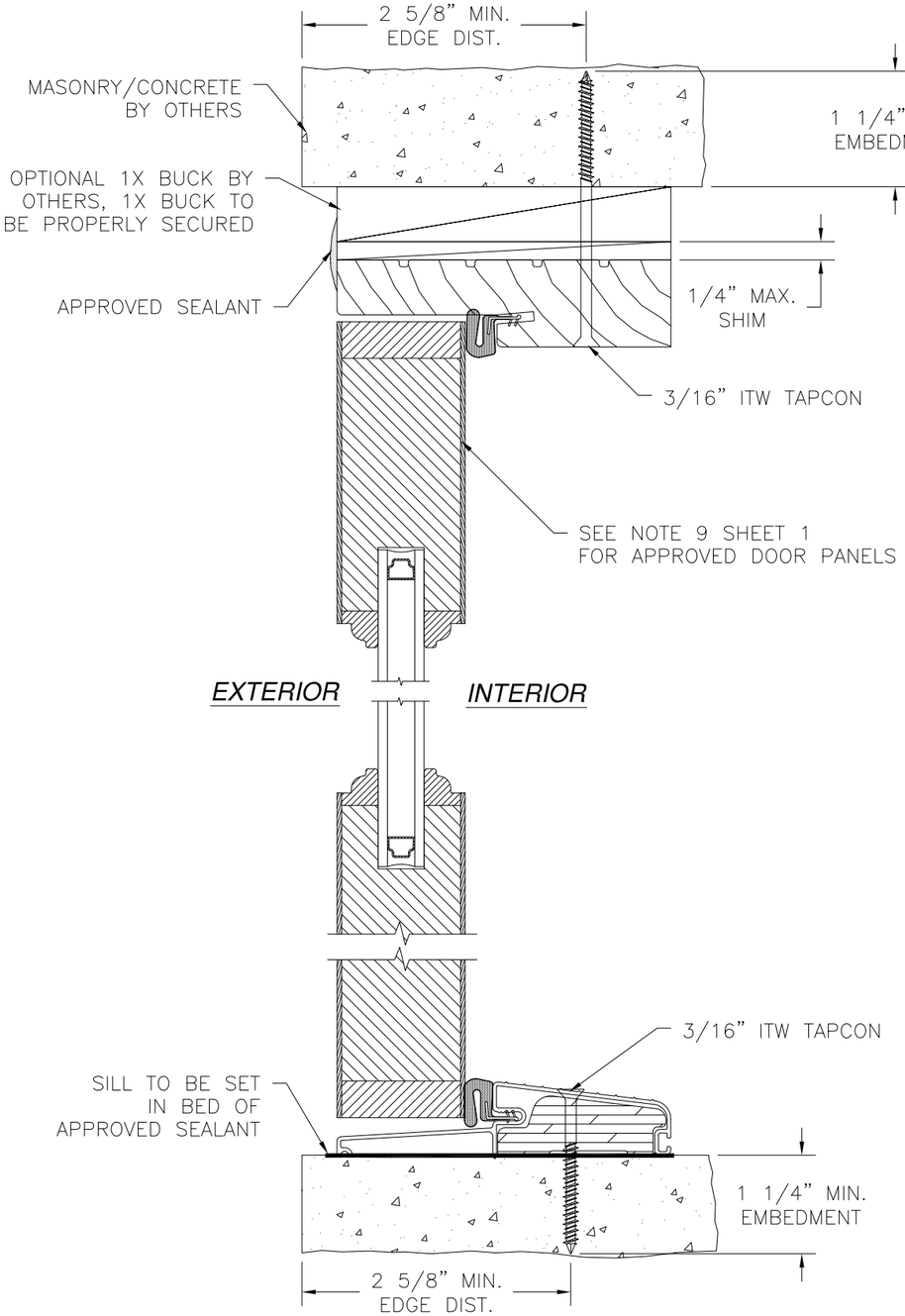

VERTICAL CROSS SECTION
MASONRY/CONCRETE INSTALLATION

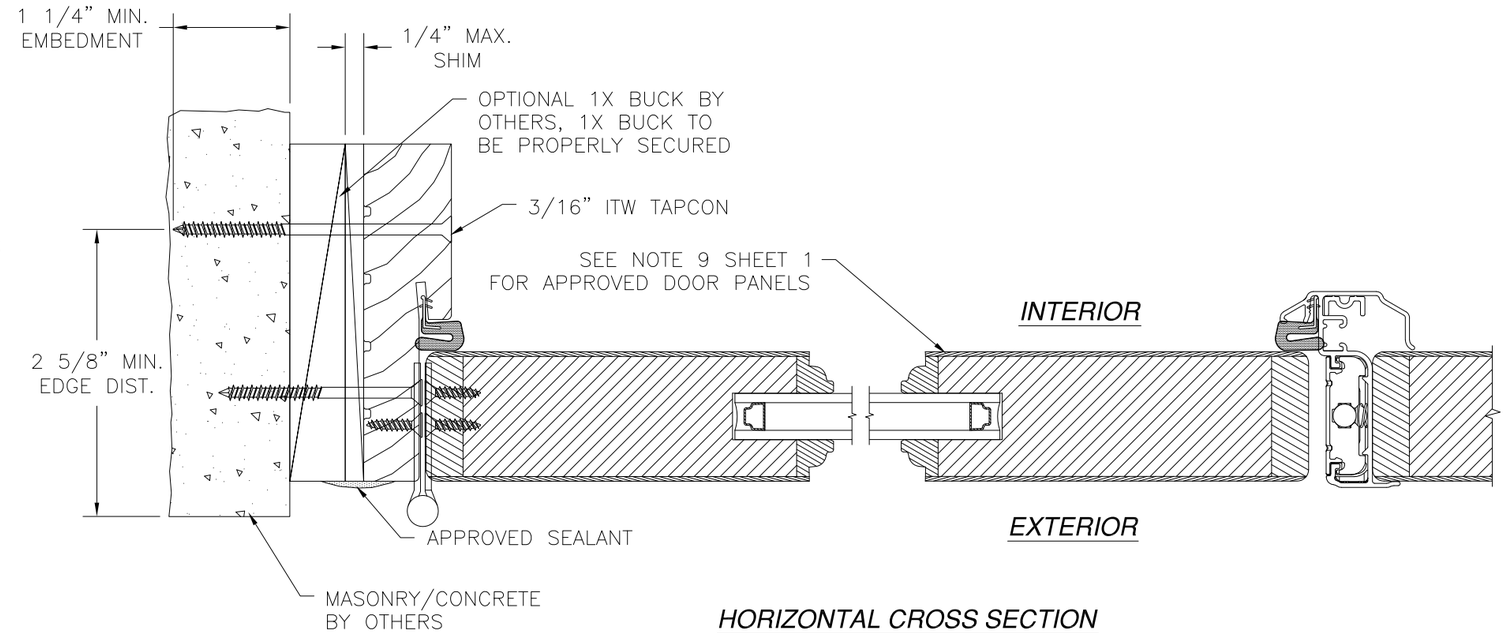

HORIZONTAL CROSS SECTION
MASONRY/CONCRETE INSTALLATION

LEMIEUX DOORS, INC.
350, RUE PARC INDUSTRIAL
WINDSOR, QUEBEC J1S 1T2

SERIES LE CHATEAU/ARTISAN DOORS 4-9/16" FRAME
GLAZED/OPAQUE IS/OS NON-IMPACT
OUTSWING INSTALLATION DETAILS

DRAWN:	DWG NO.	REV
TJH	08-01086	–
SCALE NTS	DATE 03/03/11	SHEET 7 OF 7

Luis R. Lomas P.E.
Texas No. 101889