plastpro

5200 W. CENTURY BLVD.
LOS ANGELES, CA 90045

OPAQUE FIBERGLASS SINGLE DOOR
w/ or w/o SIDELITES
INSWING / OUTSWING
"IMPACT"

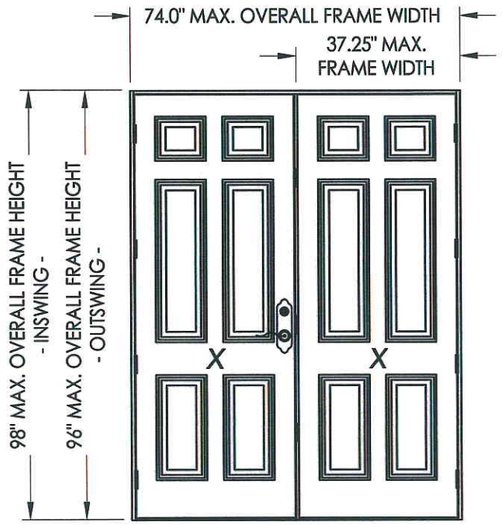

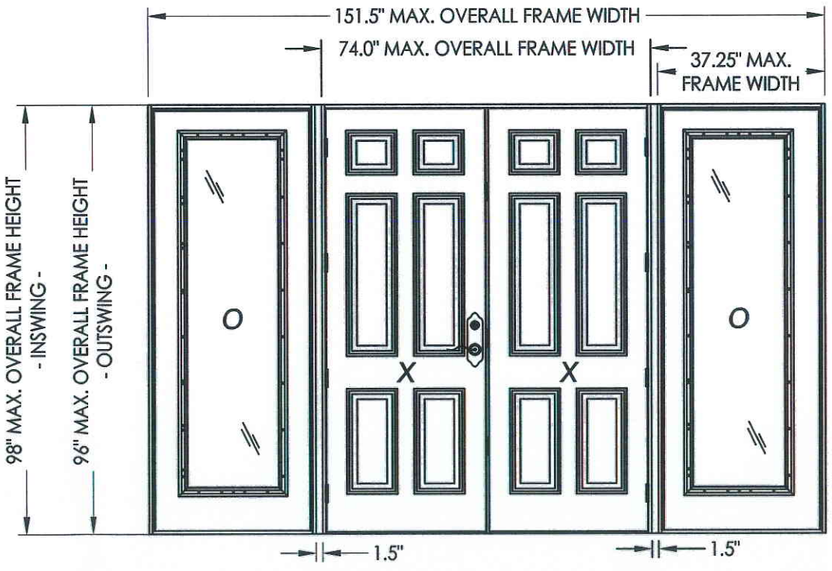

EVALUATED FOR USE IN THE STATE OF TEXAS

The Plastpro Fiberglass Door described herein complies with the 2006 International Residential Code (IRC), Sections R301 & R613 and the 2006 International Building Code (IBC), Sections 1405.12, 1609, 1714.5, 2403 and 2404 (including Texas revisions) subject to the following conditions:

1. Anchors shall be as listed and spaced as shown in the details. Anchor embedment to base material shall be beyond wall dressing or stucco.
2. This system has been tested and evaluated as a large missile impact protective system for installation in the Seaward, Inland I and Inland II areas. This product meets missile level "D" and includes Wind Zone 4 as defined in ASTM E1996.
3. Allowable design pressure requirements must be equal to or less than the design pressure rating shown in the design pressure chart, sheet 1 of this drawing.
4. Conditions not covered by this drawing are subject to further engineering analysis.

SUPPORTING DOCUMENTS & EVIDENCE

1. Testing per AAMA/WDMA/CSA 101/I.S.2/A440-05 & ASTM E 1886/1996-05:
   Testing Evaluation Laboratories, Inc. test report(s) #: TEL 01390242 & TEL 01390242-IC.
2. Calculations (Anchoring and Glass load resistance report ASTM E1300-04) prepared by Lyndon F. Schmidt, P.E.
3. Certificate of Participation issued by the National Accreditation and Management Institute, Inc., certifying that Plastpro is manufacturing products within a Quality Assurance program.

TABLE OF CONTENTS

SHEET#	DESCRIPTION
1	Typical elevations, design pressures & general notes
2	Door panel & glazing details
3	Sidelite panel & glazing details
4	Elevations
5	Horizontal cross sections
6	Vertical cross sections
7	Vertical cross sections
8	Frame anchoring
9	Frame anchoring
10	Astragal & multi-point lock details
11	Bill of materials and components

CONFIGURATION	MAX. FRAME DIMENSION	MAX. D.L.O. DIMENSION	GLASS TYPE	DESIGN PRESSURE (PSF) INSWING		DESIGN PRESSURE (PSF) OUTSWING	
				POSITIVE	NEGATIVE	POSITIVE	NEGATIVE
XX	74.00" x 98.00"	21.00" x 79.0"	G1	+50.0	-55.0	+50.0	-50.0
OXXO	151.50" x 98.00"	21.00" x 79.0"		+50.0	-55.0	+50.0	-50.0

STATE OF TEXAS * LYNDON F. SCHMIDT 104123 LICENSED PROFESSIONAL ENGINEER * 4.2010

Documents Prepared By: Lyndon F. Schmidt, P.E.
TEXAS P.E. #104123

RW BUILDING CONSULTANTS, INC.
P.O. Box 230 Valrico FL. 33595
Phone No.: 813.659.9197

TEXAS BOARD OF PROFESSIONAL ENGINEERS
CERTIFICATE OF REGISTRATION # F-11852

PRODUCT: PLASTPRO FIBERGLASS DOOR

PART OR ASSEMBLY: TYPICAL ELEVATIONS, DESIGN PRESSURES & GENERAL NOTES

NO.	DATE	BY	REVISIONS

DATE: 04/13/10
SCALE: N.T.S.
DWG. BY: JK
CHK. BY: LFS
DRAWING NO.: TX-4075
SHEET 1 OF 11

© 2010 R.W. BUILDING CONSULTANTS INC.

R:\A - Projects\Project Folders\proj 1501 - 1600\PF 1512\D. RWBC Drawings\TEXAS 2010\TX 8-0 FG IMP.dwg, TX-4075

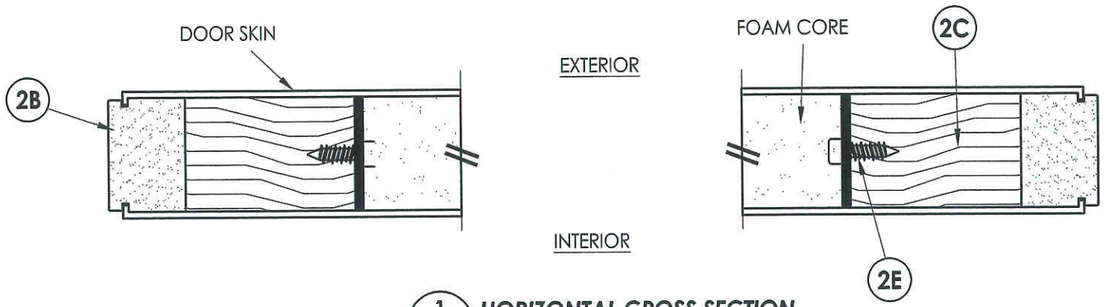

1/2 **HORIZONTAL CROSS SECTION**

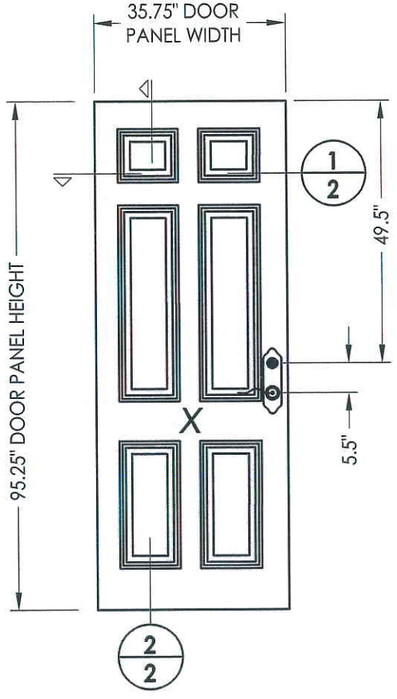

40 **DOOR PANEL**

FIBERGLASS DOOR SKIN: MIN. 0.075" THK. (Fy = 11063 PSI MIN.)
CORE MATERIAL: POLYURETHANE FOAM (BASF, MIN. 1.9 PCF DENSITY)

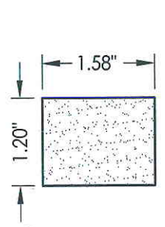

2A **TOP RAIL**
Cellular PVC

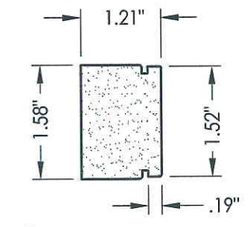

2B **LATCH & HINGE STILE**
Cellular PVC

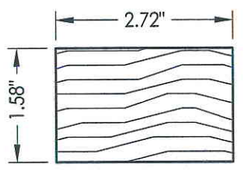

2C **LATCH & HINGE STILE**
Wood Reinforcement
(S.G. >= 0.42)

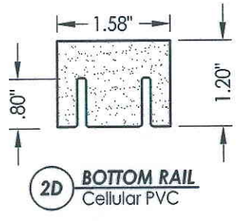

2D **BOTTOM RAIL**
Cellular PVC

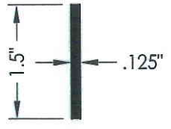

2E **STEEL REINFORCEMENT BAR**
w/ Nylon Screw

NOTE:
1. Spacing for lite frame screws is as follows:
   Sides: 6.5" from corners and 10" o.c. thereafter
   Top & Bottom: 3.5" from corners and 6" o.c. therafter

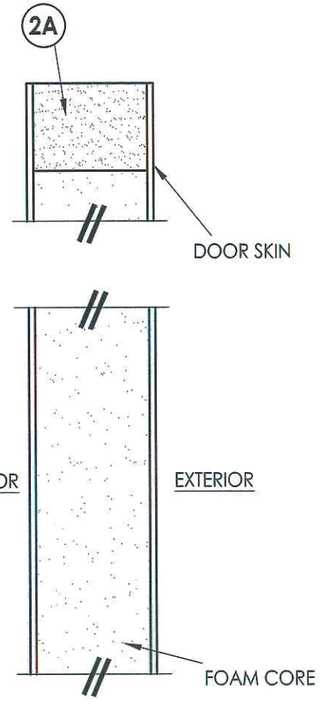

2/2 **VERTICAL CROSS SECTION**

STATE OF TEXAS
LYNDON F. SCHMIDT
104123
LICENSED PROFESSIONAL ENGINEER
4.20.10

Documents Prepared By: Lyndon F. Schmidt, P.E.
TEXAS P.E. #104123

RW BUILDING CONSULTANTS, INC.
P.O. Box 230 Valrico FL. 33595
Phone No.: 813.659.9197

TEXAS BOARD OF PROFESSIONAL ENGINEERS
CERTIFICATE OF REGISTRATION # F-11852

PRODUCT: PLASTPRO FIBERGLASS DOOR

PART OR ASSEMBLY: DOOR PANEL & GLAZING DETAILS

NO.	DATE	BY	REVISIONS

DATE: 04/13/10
SCALE: N.T.S.
DWG. BY: JK
CHK. BY: LFS
DRAWING NO.: TX-4075
SHEET 2 OF 11

© 2010 R.W. BUILDING CONSULTANTS INC.

\\sbs2k3\RWBC\A - Projects\Project Folders\proj 1501 - 1600\PF 1512\D. RWBC Drawings\TEXAS 2010\TX 8-0 FG IMP.dwg, 4-2

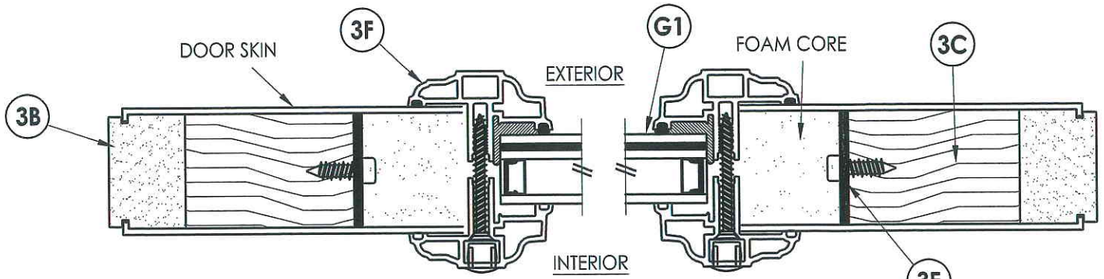

1/3 **HORIZONTAL CROSS SECTION**

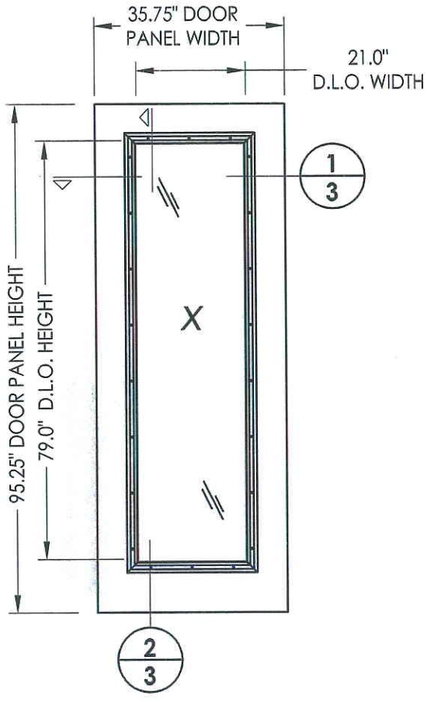

50 **SIDELITE PANEL**

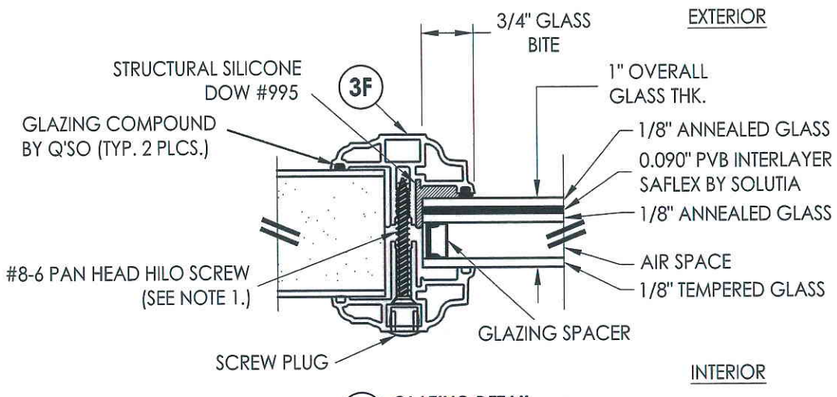

G1 **GLAZING DETAIL**
ODL Lite Frame

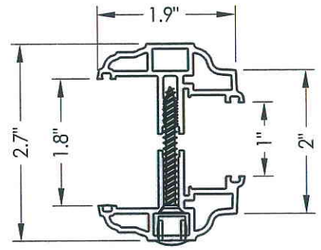

3F **ODL LITE FRAME**
Aluminum

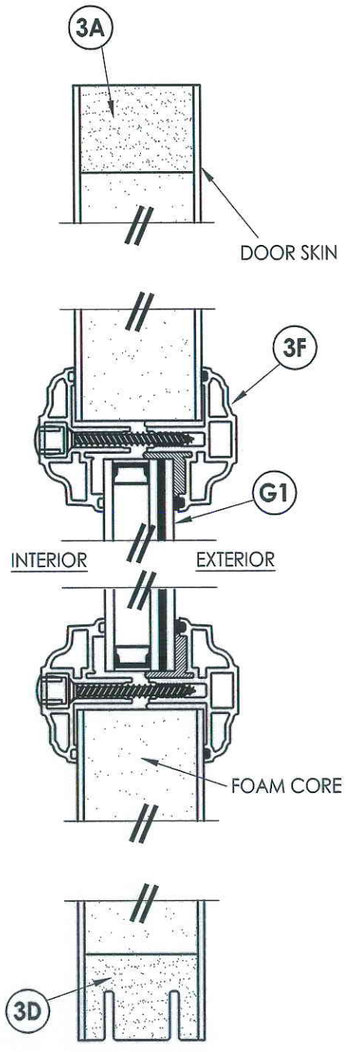

2/3 **VERTICAL CROSS SECTION**

FIBERGLASS DOOR SKIN: MIN. 0.075" THK. (Fy = 11063 PSI MIN.)
CORE MATERIAL: POLYURETHANE FOAM (BASF, MIN. 1.9 PCF DENSITY)

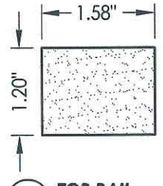

3A **TOP RAIL**
Cellular PVC

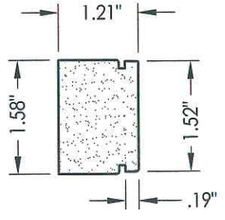

3B **STILE**
Cellular PVC

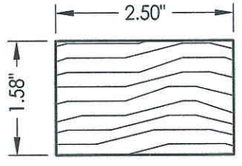

3C **STILE**
Wood Reinforcement
(S.G. >= 0.42)

NOTE:
1. Spacing for lite frame screws is as follows:
   Sides: 4.5" from corners and 10.5" o.c. thereafter
   Top & Bottom: 4.5" from corners and @ centerline.

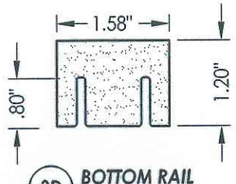

3D **BOTTOM RAIL**
Cellular PVC

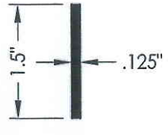

3E **STEEL REINFORCEMENT BAR**
w/ Nylon Screw

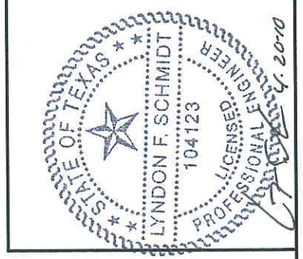

Documents Prepared By: Lyndon F. Schmidt, P.E.
TEXAS P.E. #104123

RW BUILDING CONSULTANTS, INC.
P.O. Box 230 Valrico FL. 33595
Phone No.: 813.659.9197

TEXAS BOARD OF PROFESSIONAL ENGINEERS
CERTIFICATE OF REGISTRATION # F-11852

PRODUCT: PLASTPRO FIBERGLASS DOOR

PART OR ASSEMBLY: SIDELITE PANEL & GLAZING DETAILS

NO.	DATE	BY

REVISIONS

DATE: 04/13/10
SCALE: N.T.S.
DWG. BY: JK
CHK. BY: LFS
DRAWING NO.: TX-4075
SHEET 3 OF 11

© 2010 R.W. BUILDING CONSULTANTS INC.

R:\A - Projects\Project Folders\proj 1501 - 1600\PF 1512\D. RWBC Drawings\TEXAS 2010\TX 8-0 FG IMP.dwg, 4-3

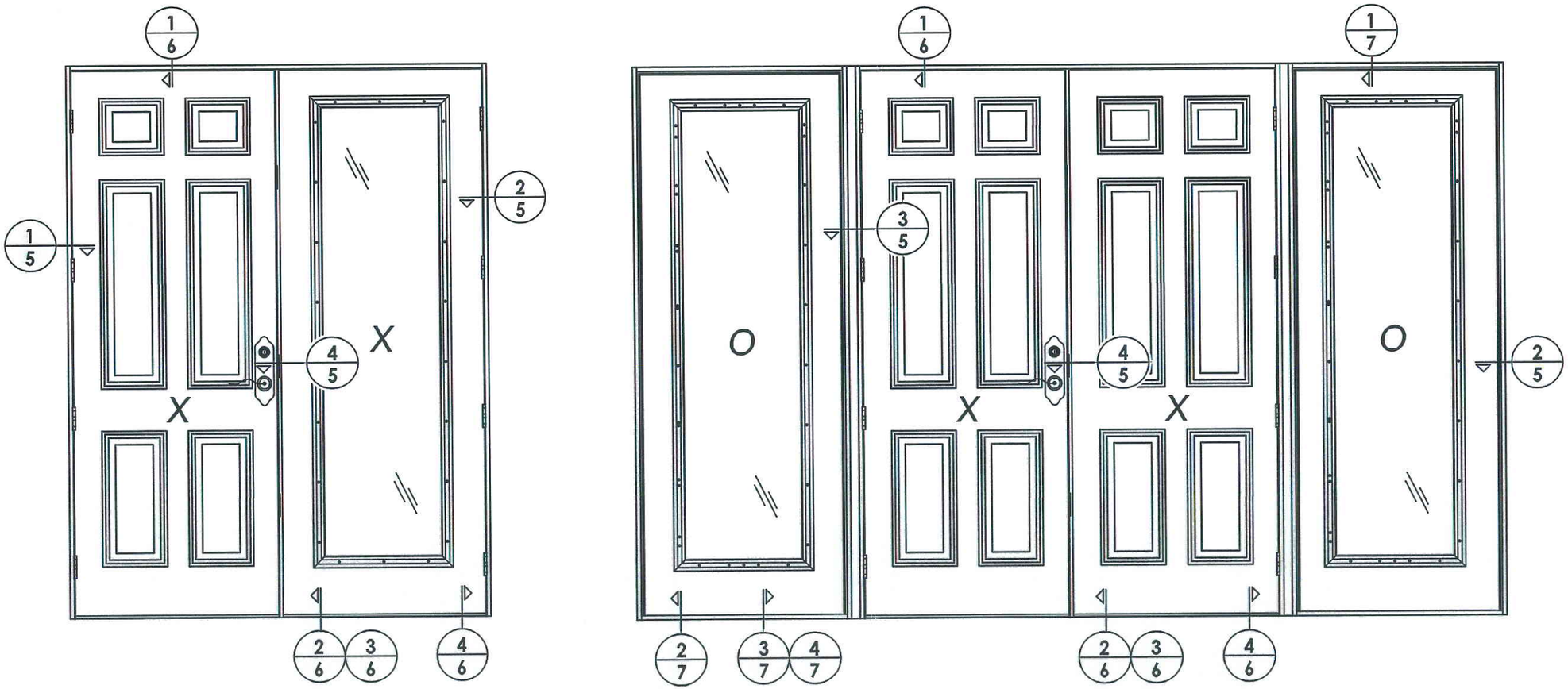

ELEVATION (XX)

ELEVATION (OXXO)

STATE OF TEXAS
LYNDON F. SCHMIDT
104123
LICENSED
PROFESSIONAL ENGINEER
4-20-10

Documents Prepared By: Lyndon F. Schmidt, P.E.
TEXAS P.E. #104123

RW BUILDING CONSULTANTS, INC.
P.O. Box 230 Valrico FL. 33595
Phone No.: 813.659.9197

TEXAS BOARD OF PROFESSIONAL ENGINEERS
CERTIFICATE OF REGISTRATION # F-11852

PRODUCT: PLASTPRO FIBERGLASS DOOR

PART OR ASSEMBLY: ELEVATIONS

NO.	DATE	REVISIONS	BY

DATE: 04/13/10
SCALE: N.T.S.
DWG. BY: JK
CHK. BY: LFS
DRAWING NO.: TX-4075
SHEET 4 OF 11

© 2010 R.W. BUILDING CONSULTANTS INC.

\\sbs2k3\RWBC\A - Projects\Project Folders\proj 1501 - 1600\PF 1512\D. RWBC Drawings\TEXAS 2010\TX 8-0 FG IMP.dwg, 4-4

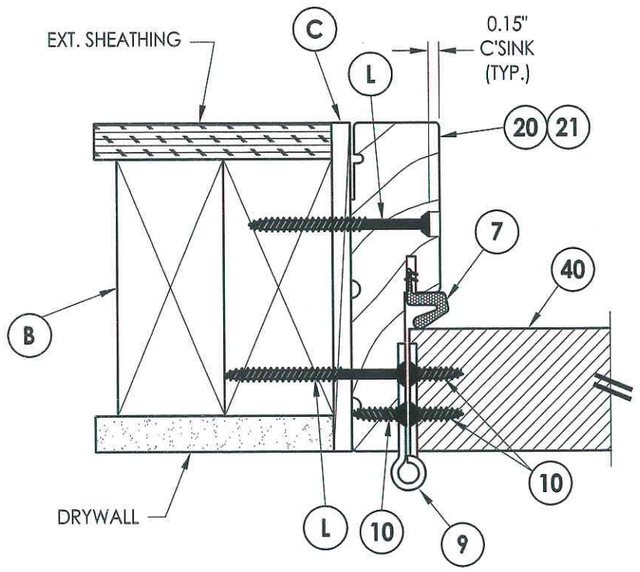

EXTERIOR

INTERIOR

1/5 HORIZONTAL CROSS SECTION
Inswing shown - outswing also approved

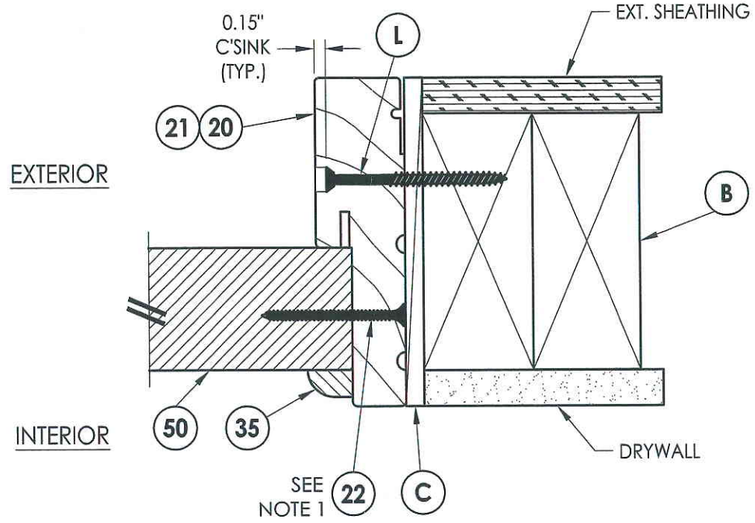

EXTERIOR

INTERIOR

2/5 HORIZONTAL CROSS SECTION
Inswing shown - outswing also approved

NOTE:

1. Sidelite screws (item #22) located at 3", 5.5", 8", 18", 28", 39", 50", 61", 72", 82" and 92" from bottom of panel.

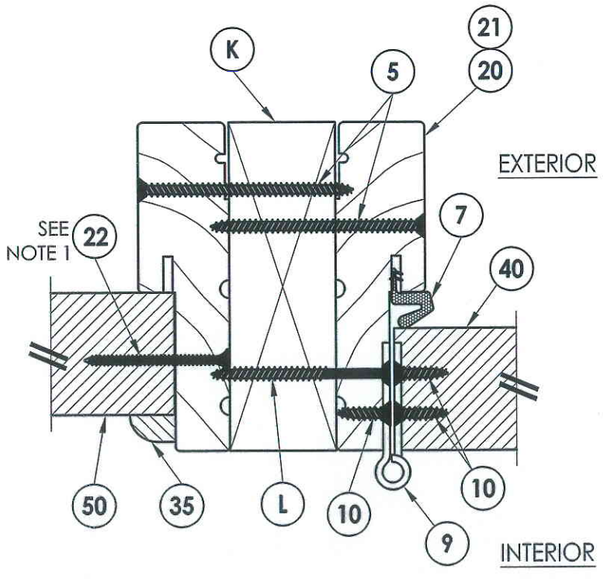

3/5 HORIZONTAL CROSS SECTION
Inswing shown - outswing also approved

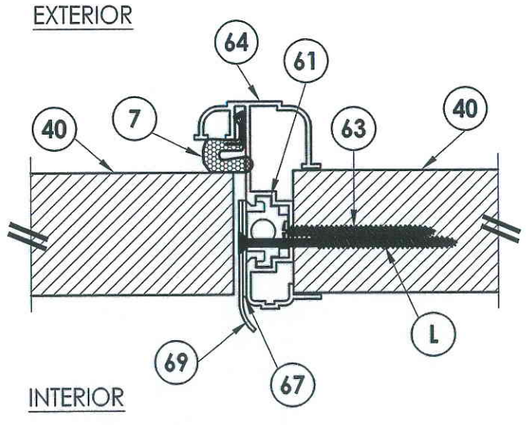

4/5 HORIZONTAL CROSS SECTION
Inswing shown - outswing also approved

STATE OF TEXAS
LYNDON F. SCHMIDT
104123
LICENSED
PROFESSIONAL ENGINEER

Documents Prepared By: Lyndon F. Schmidt, P.E.
TEXAS P.E. #104123

RW BUILDING CONSULTANTS, INC.
P.O. Box 230 Valrico FL. 33595
Phone No.: 813.659.9197

TEXAS BOARD OF PROFESSIONAL ENGINEERS
CERTIFICATE OF REGISTRATION # F-11852

PRODUCT: PLASTPRO FIBERGLASS DOOR

PART OR ASSEMBLY: HORIZONTAL CROSS SECTIONS

NO.	DATE	REVISIONS	BY

DATE: 04/13/10
SCALE: N.T.S.
DWG. BY: JK
CHK. BY: LFS
DRAWING NO.: TX-4075
SHEET 5 OF 11

© 2010 R.W. BUILDING CONSULTANTS INC.

R:\A - Projects\Project Folders\proj 1501 - 1600\PF 1512\D. RWBC Drawings\TEXAS 2010\TX 8-0 FG IMP.dwg, 4-5

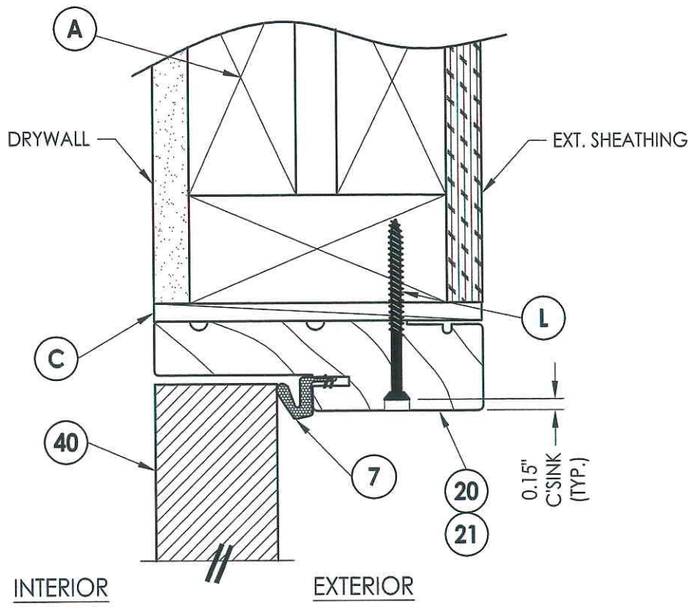

1/6 **VERTICAL CROSS SECTION**
Inswing shown - outswing also approved

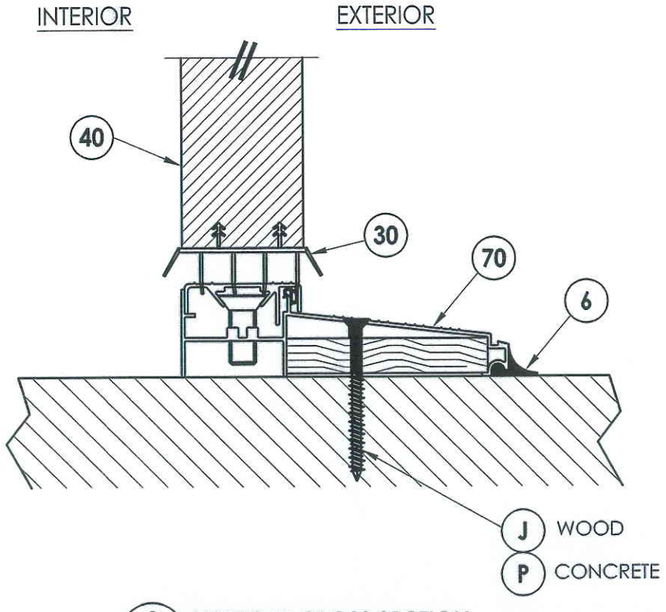

2/6 **VERTICAL CROSS SECTION**
Inswing configuration

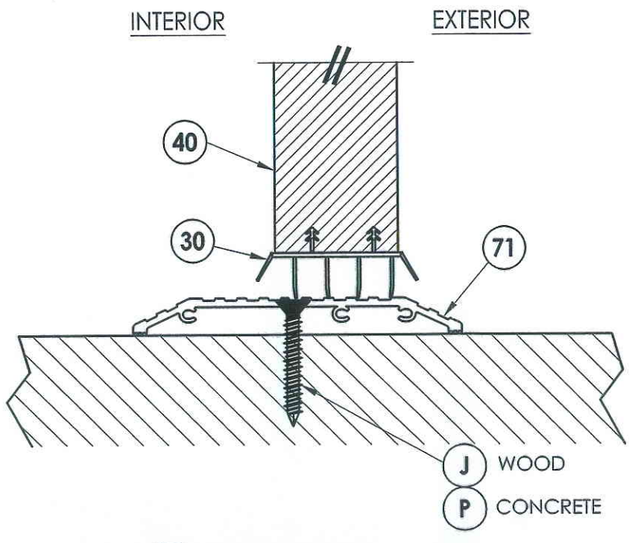

3/6 **VERTICAL CROSS SECTION**
Shown w/ ADA threshold

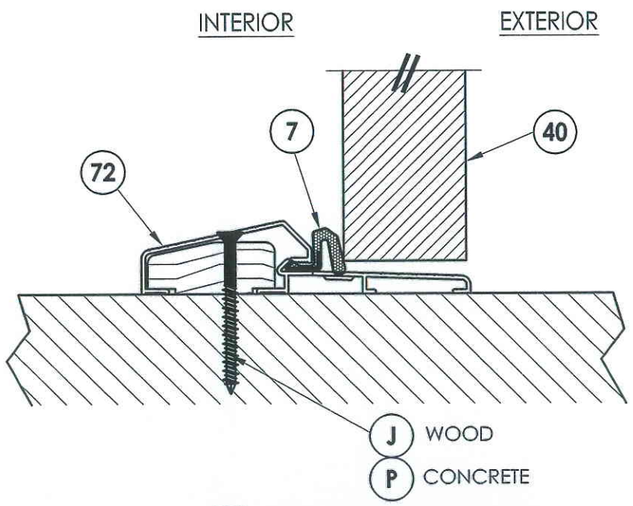

4/6 **VERTICAL CROSS SECTION**
Outswing configuration

STATE OF TEXAS
LYNDON F. SCHMIDT
104123
LICENSED PROFESSIONAL ENGINEER
4-20-10

Documents Prepared By: Lyndon F. Schmidt, P.E.
TEXAS P.E. #104123

RW BUILDING CONSULTANTS, INC.
P.O. Box 230 Valrico FL. 33595
Phone No.: 813.659.9197

TEXAS BOARD OF PROFESSIONAL ENGINEERS
CERTIFICATE OF REGISTRATION # F-11852

PRODUCT: PLASTPRO FIBERGLASS DOOR

PART OR ASSEMBLY: VERTICAL CROSS SECTIONS

NO.	DATE	BY	REVISIONS

DATE: 04/13/10
SCALE: N.T.S.
DWG. BY: JK
CHK. BY: LFS
DRAWING NO.: TX-4075
SHEET 6 OF 11

© 2010 R.W. BUILDING CONSULTANTS INC.

\\sbs2k3\RWBC\A - Projects\Project Folders\proj 1501 - 1600\PF 1512\D. RWBC Drawings\TEXAS 2010\TX 8-0 FG IMP.dwg, 4-6

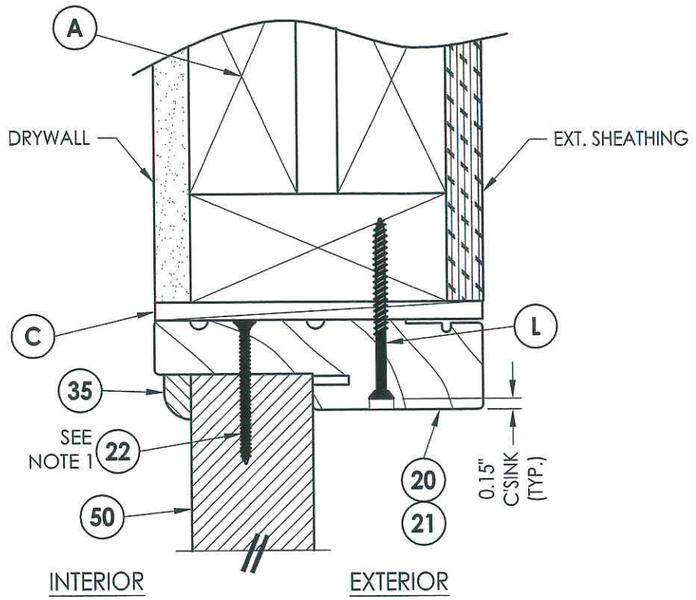

1/7 **VERTICAL CROSS SECTION**
Inswing shown - outswing also approved

NOTE:

1. Screws thru head and sill jamb located 3" from each end and on center line.

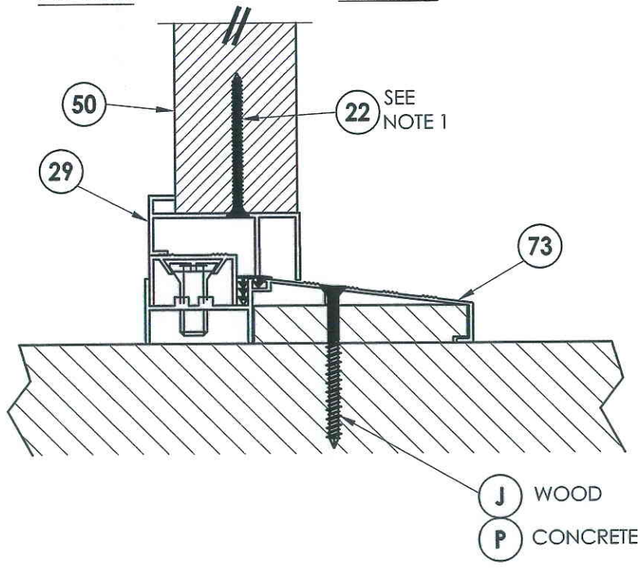

2/7 **VERTICAL CROSS SECTION**
Inswing configuration

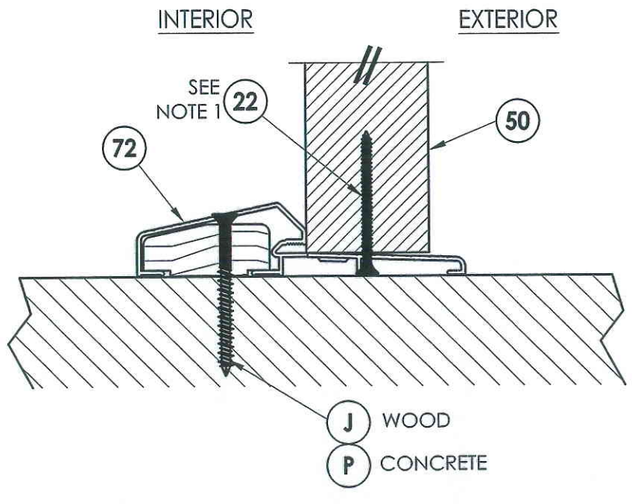

3/7 **VERTICAL CROSS SECTION**
Outswing configuration

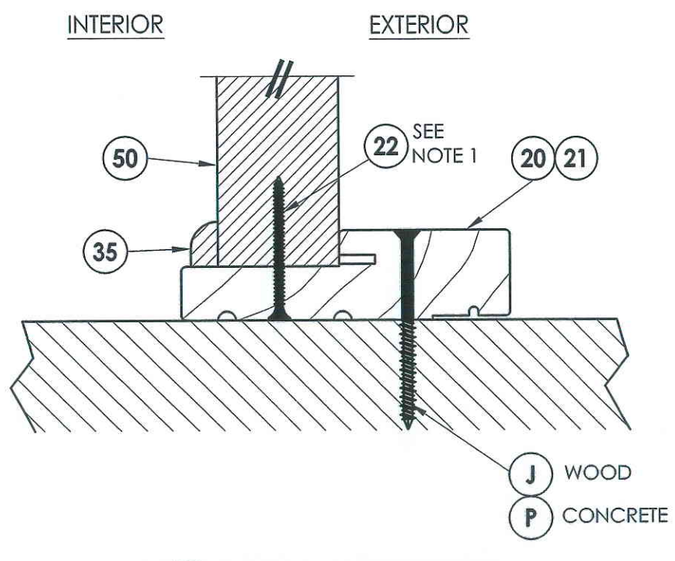

4/7 **VERTICAL CROSS SECTION**
Outswing configuration

Documents Prepared By: Lyndon F. Schmidt, P.E.
TEXAS P.E. #104123

BUILDING CONSULTANTS, INC.
P.O. Box 230 Valrico FL. 33595
Phone No.: 813.859.9197

TEXAS BOARD OF PROFESSIONAL ENGINEERS
CERTIFICATE OF REGISTRATION # F-11852

PRODUCT: PLASTPRO FIBERGLASS DOOR

PART OR ASSEMBLY: VERTICAL CROSS SECTIONS

NO.	DATE	BY	REVISIONS

DATE: 04/13/10
SCALE: N.T.S.
DWG. BY: JK
CHK. BY: LFS
DRAWING NO.: TX-4075
SHEET 7 OF 11

© 2010 R.W. BUILDING CONSULTANTS INC.

\\sbs2k3\RWBC\A - Projects\Project Folders\proj 1501 - 1600\PF 1512\D. RWBC Drawings\TEXAS 2010\TX 8-0 FG IMP.dwg, 4-7

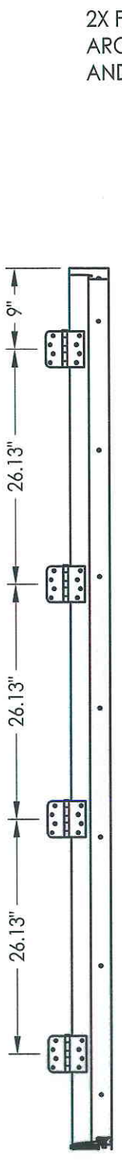

HINGE JAMB

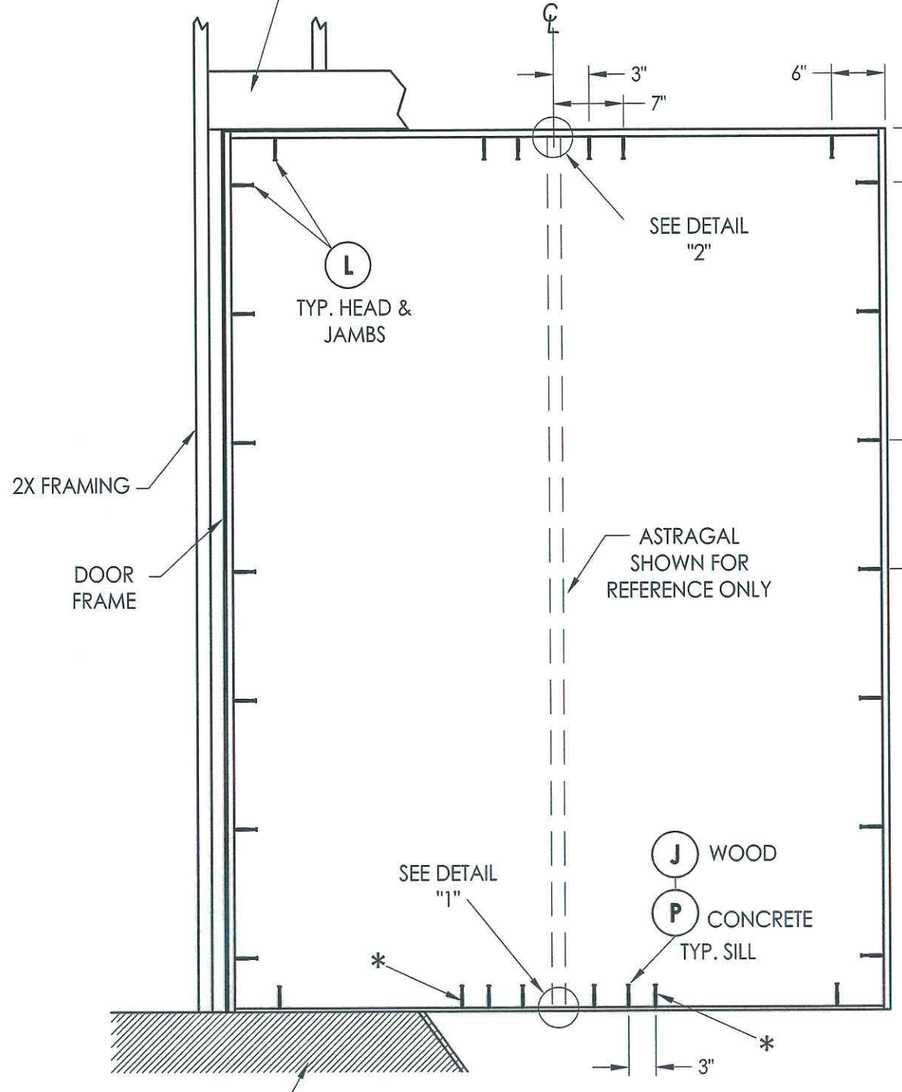

FRAME ANCHORING
XX

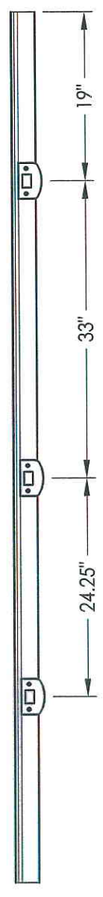

ASTRAGAL

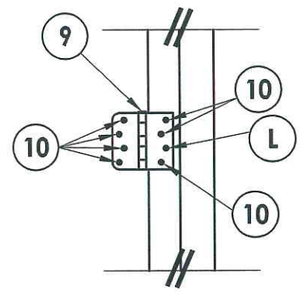

HINGE DETAIL

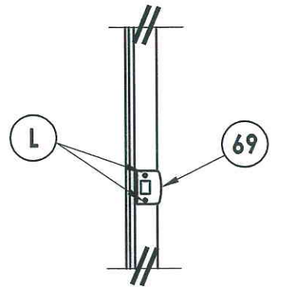

LATCH DETAIL

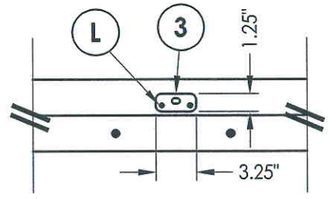

DETAIL 2

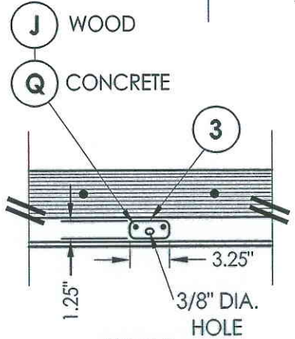

DETAIL 1
Inswing configuration

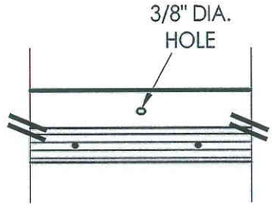

DETAIL 1
Outswing configuration

* ADDITIONAL ANCHOR REQ'D FOR D.P. > 40 PSF (WOOD SUBSTRATE ONLY)

STATE OF TEXAS
LYNDON F SCHMIDT
104123
LICENSED PROFESSIONAL ENGINEER
4-20-10

Documents Prepared By: Lyndon F. Schmidt, P.E.
TEXAS P.E. #104123

RW BUILDING CONSULTANTS, INC.
P.O. Box 230 Valrico FL. 33595
Phone No.: 813.659.9197

TEXAS BOARD OF PROFESSIONAL ENGINEERS
CERTIFICATE OF REGISTRATION # F-11852

PRODUCT: PLASTPRO FIBERGLASS DOOR

PART OR ASSEMBLY: FRAME ANCHORING

NO.	DATE	REVISIONS	BY

DATE: 04/13/10
SCALE: N.T.S.
DWG. BY: JK
CHK. BY: LFS
DRAWING NO.: TX-4075
SHEET 8 OF 11

© 2010 R.W. BUILDING CONSULTANTS INC.

R:\A - Projects\Project Folders\proj 1501 - 1600\PF 1512\D. RWBC Drawings\TEXAS 2010\TX 8-0 FG IMP.dwg, 4-8

2X FRAMING TO BE DESIGNED BY THE ENGINEER OR ARCHITECT OF RECORD BASED ON WIND LOADS AND THE CLADDING BEING USED.

2X FRAMING

L TYP. HEAD & JAMBS

5 TYP. MULLIONS

SEE DETAIL "2"

ASTRAGAL SHOWN FOR REFERENCE ONLY

SEE DETAIL "1"

J WOOD
P CONCRETE
TYP. SILL

DOOR FRAME

9"
26.13"
26.13"
26.13"

4"
7"
3"
6"
6"
6"
3"
3"
3"

14.5" MAX. O.C. (TYP.)

19"
33"
24.25"

FLOOR SUBSTRATE MATERIAL
CONCRETE (MIN. 3000 PSI)
WOOD (S.G. >= 0.42)

* ADDITIONAL ANCHOR REQ'D FOR D.P. > 40 PSF (WOOD SUBSTRATE ONLY)

HINGE JAMB

FRAME ANCHORING
XX

ASTRAGAL

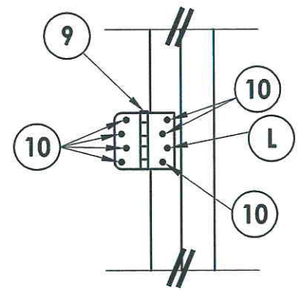

HINGE DETAIL

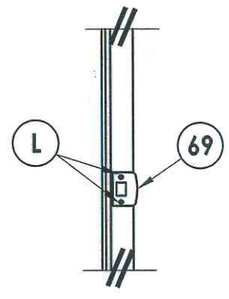

LATCH DETAIL

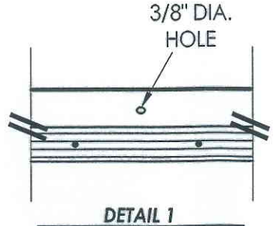

DETAIL 1
Outswing configuration

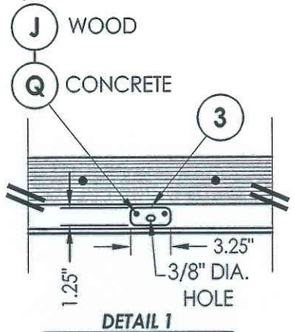

DETAIL 1
Inswing configuration

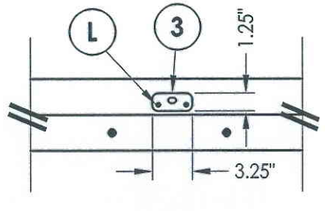

DETAIL 2

STATE OF TEXAS
LYNDON F. SCHMIDT
104123
LICENSED PROFESSIONAL ENGINEER
4-20-10

Documents Prepared By: Lyndon F. Schmidt, P.E.
TEXAS P.E. #104123

RW BUILDING CONSULTANTS, INC.
P.O. Box 230 Valrico FL. 33595
Phone No.: 813.659.9197

TEXAS BOARD OF PROFESSIONAL ENGINEERS
CERTIFICATE OF REGISTRATION # F-11852

PRODUCT: PLASTPRO FIBERGLASS DOOR

PART OR ASSEMBLY: FRAME ANCHORING

NO.	DATE	BY	REVISIONS

DATE: 04/13/10
SCALE: N.T.S.
DWG. BY: JK
CHK. BY: LFS
DRAWING NO.: TX-4075
SHEET 9 OF 11

© 2010 R.W. BUILDING CONSULTANTS INC.

R:\A - Projects\Project Folders\proj 1501 - 1600\PF 1512\D. RWBC Drawings\TEXAS 2010\TX 8-0 FG IMP.dwg, 4-9

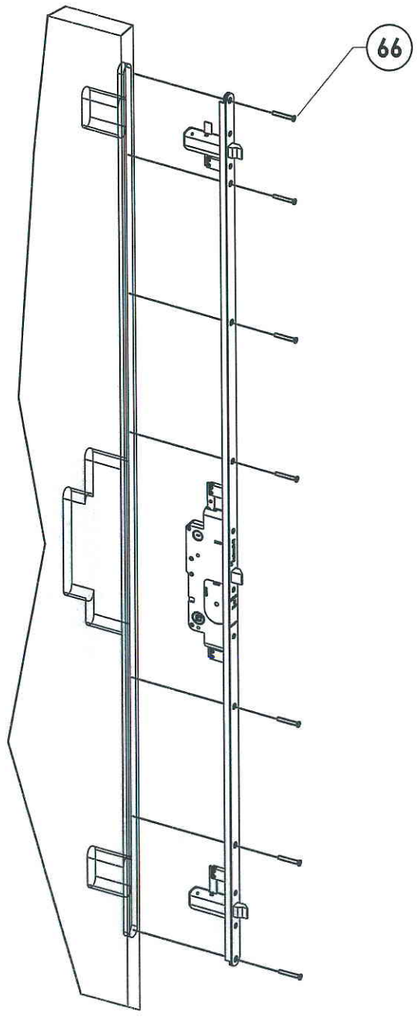

65 **MULTI-POINT LOCK**
Trilennium by W & F

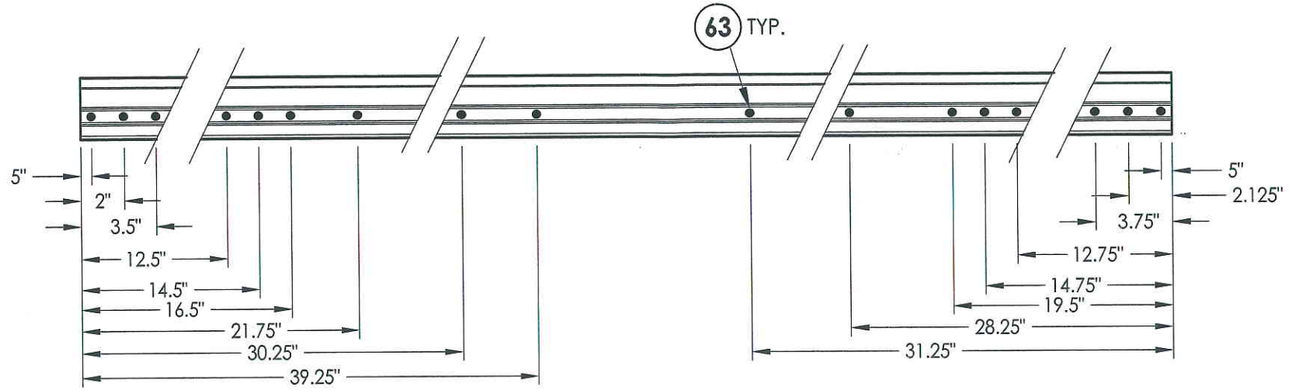

ASTRAGAL SCREW LOCATIONS

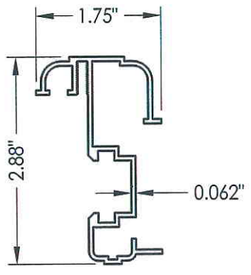

64 **ASTRAGAL**
By DLP

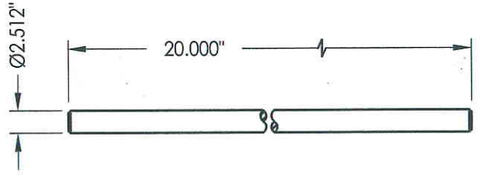

62 **SLIDE BOLT ROD**
Typ. top & bottom of astragal
top through 2.0"
bottom through 2.0"

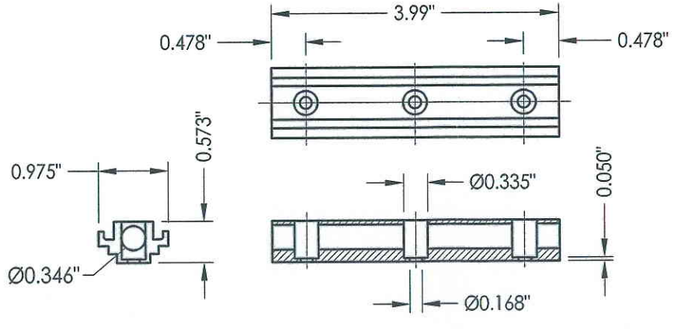

61 **CONCEALED STIFFENER**

Documents Prepared By: Lyndon F. Schmidt, P.E.
TEXAS P.E. #104123

RW BUILDING CONSULTANTS, INC.
P.O. Box 230 Valrico FL. 33595
Phone No.: 813.659.9197

TEXAS BOARD OF PROFESSIONAL ENGINEERS
CERTIFICATE OF REGISTRATION # F-11852

STATE OF TEXAS · LYNDON F. SCHMIDT · 104123 · LICENSED PROFESSIONAL ENGINEER

PRODUCT: PLASTPRO FIBERGLASS DOOR

PART OR ASSEMBLY: ASTRAGAL & MULTI-POINT LOCK DETAILS

NO.	DATE	BY	REVISIONS

DATE: 04/13/10
SCALE: N.T.S.
DWG. BY: JK
CHK. BY: LFS
DRAWING NO.: TX-4075
SHEET 10 OF 11

© 2010 R.W. BUILDING CONSULTANTS INC.

\\sbs2k3\RWBC\A - Projects\Project Folders\proj 1501 - 1600\PF 1512\D. RWBC Drawings\TEXAS 2010\TX 8-0 FG IMP.dwg, 4-10

BILL OF MATERIALS

ITEM	DESCRIPTION	MATERIAL
A	2X HEADER FRAMING SG >= 0.42	WOOD
B	2X FRAMING SG >= 0.42	WOOD
C	1/4" MAX. SHIM SPACE	-
J	#10 X 3" PFH WOOD SCREW	STEEL
K	2X REINFORCEMENT (CLEAR PINE SG >= 0.42)	WOOD
L	#10 X 2-1/2" PFH WOOD SCREW	STEEL
M	#8 X 2-1/2" PFH WOOD SCREW	STEEL
P	1/4" PFH ELCO OR ITW CONCRETE SCREW (1-3/4" MIN. EMB.)	STEEL
Q	3/16" PFH ITW CONCRETE SCREW (1-3/4" MIN. EMB.)	STEEL
3	ASTRAGAL STRIKE PLATE	STEEL
5	#10 X 3" PFH SCREW	STEEL
6	SEALANT	SILICONE
7	WEATHERSTRIP BY Q-LON	FOAM
9	4" HINGE	STEEL
10	#9 X 3/4" PFH WOOD SCREW	STEEL
20	JAMB FINGER - JOINT - PINE (SG >= 0.42)	WOOD
21	POLY FIBER JAMB	POLY FIBER
22	#7 X 2" PFH DRYWALL SCREW	STEEL
29	SIDELITE SPACER	PVC
30	DOOR SWEEP	ALUM.
35	TRIM	WOOD
40	DOOR PANEL - SEE DOOR PANEL DETAIL SHEET FOR CONSTRUCTION DETAILS	-
50	SIDELITE PANEL - SEE SIDELITE PANEL DETAIL SHEET FOR CONSTRUCTION DETAILS	-
61	CONCEALED STIFFENER 6063-T6 BY PLASTPRO	ALUMINUM
62	SLIDE BOLT ROD	STEEL
63	#8 X 2" PPH SMS	STEEL
64	ASTRAGAL 6063-T5 ALUMINUM BY DLP	ALUMINUM
65	MULTI-POINT LOCK ASSEMBLY TRILENNIUM BY W & F	-
66	#10 X 1-1/2" PFH SCREW	STEEL
67	BACKING PLATE	STEEL
69	MULTI-POINT STRIKE PLATE	STEEL
70	INSWING THRESHOLD BY DLP	ALUM. / WOOD
71	ADA THRESHOLD BY DLP	ALUM.
72	OUTSWING THRESHOLD BY DLP	ALUM. / WOOD
73	SIDELITE THRESHOLD BY DLP	ALUM. / WOOD

CONCRETE ANCHOR NOTES:

1. *Substitution of equal concrete anchors from a different supplier may have different edge distance and center distance requirements.*
2. *Concrete anchor locations at the corners may be adjusted to maintain the min. edge distance to mortar joints. If concrete anchor locations noted as "MAX. ON CENTER" must be adjusted to maintain the min. edge distance to mortar joints, additional concrete anchors may be required to ensure the "MAX. ON CENTER" dimensions are not exceeded.*
3. *Concrete anchor table:*

ANCHOR TYPE	ANCHOR SIZE	MIN. EMBEDMENT	MIN. CLEARANCE TO MASONRY EDGE	MIN. CLEARANCE TO ADJACENT ANCHOR
ITW	3/16" 1/4"	1-3/4" 1-3/4"	2-5/8" 2-1/2"	2-1/4" 3"
ELCO	1/4"	1-3/4"	1"	4"

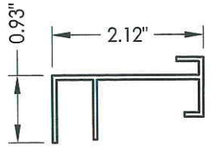

29 **SIDELITE SPACER**

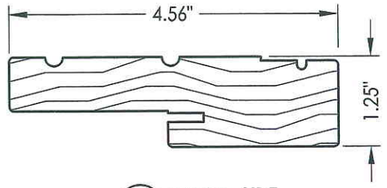

20 **HEAD & SIDE** Jamb

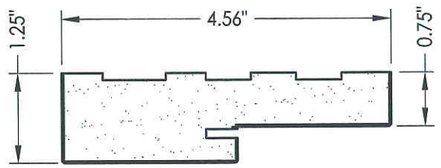

21 **HEAD & SIDE** Poly fiber jamb

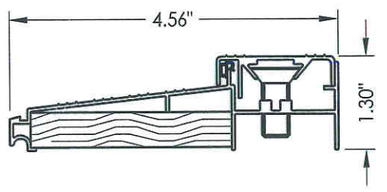

70 **INSWING THRESHOLD**

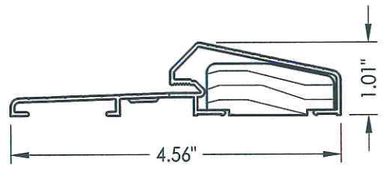

72 **OUTSWING THRESHOLD**

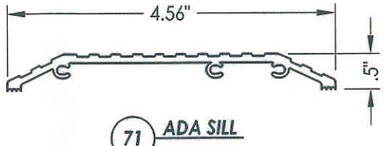

71 **ADA SILL**

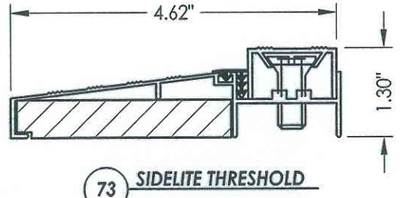

73 **SIDELITE THRESHOLD**

Documents Prepared By: Lyndon F. Schmidt, P.E.
TEXAS P.E. #104123

RW BUILDING CONSULTANTS, INC.
P.O. Box 230 Valrico FL. 33595
Phone No.: 813.659.9197

TEXAS BOARD OF PROFESSIONAL ENGINEERS
CERTIFICATE OF REGISTRATION # F-11852

PRODUCT: PLASTPRO FIBERGLASS DOOR

PART OR ASSEMBLY: BILL OF MATERIALS & COMPONENTS

NO.	DATE	BY	REVISIONS

DATE: 04/13/10
SCALE: N.T.S.
DWG. BY: JK
CHK. BY: LFS
DRAWING NO.: TX-4075
SHEET 11 OF 11

© 2010 R.W. BUILDING CONSULTANTS INC.

\\sbs2k3\RWBC\A - Projects\Project Folders\proj 1501 - 1600\PF 1512\D. RWBC Drawings\TEXAS 2010\TX 8-0 FG IMP.dwg, 4-11