MASTERGRAIN

16566 HIGHWAY 12 PO BOX 399 MIDLAND, ONTARIO, CANADA

OPAQUE FIBERGLASS DOUBLE DOOR
w/ or w/o SIDELITES
INSWING / OUTSWING
"NON-IMPACT"

EVALUATED FOR USE IN THE STATE OF TEXAS

The Master Grain Fiberglass Door described herein complies with the 2006 International Residential Code (IRC), Sections R301 & R613 and the 2006 International Building Code (IBC), Sections 1405.12, 1609, 1714.5, 2403 and 2404 (including Texas revisions) subject to the following conditions:

1. Anchors shall be as listed and spaced as shown in the details. Anchor embedment to base material shall be beyond wall dressing or stucco.
2. When used in areas requiring wind-borne debris protection this product is required to be protected with an impact resistant covering that complies with Section R301.2.1.2 of the IRC and Section 1609.1.2 of the IBC.
3. Allowable design pressure requirements must be equal to or less than the design pressure rating shown in the design pressure chart, sheet 1 of this drawing.
4. Conditions not covered by this drawing are subject to further engineering analysis.

SUPPORTING DOCUMENTS & EVIDENCE

1. Testing per ASTM E330-02:
   Testing Evaluation Laboratories, Inc. test report(s) #: TEL 01680214, TEL 01680198
2. Calculations (Anchoring and Glass load resistance report ASTM E1300-04) prepared by Lyndon F. Schmidt, P.E.
3. Certificate of Participation issued by the National Accreditation and Management Institute, Inc., certifying that Therma-Tru Corp. is manufacturing products within a Quality Assurance program.

TABLE OF CONTENTS

SHEET#	DESCRIPTION
1	Typical elevations, design pressures & general notes
2	Door panel details
3	Sidelite panel details and glazing detail
4	Elevations
5	Horizontal cross section
6	Vertical cross sections
7	Vertical cross sections
8	Frame anchoring
9	Bill of materials and components

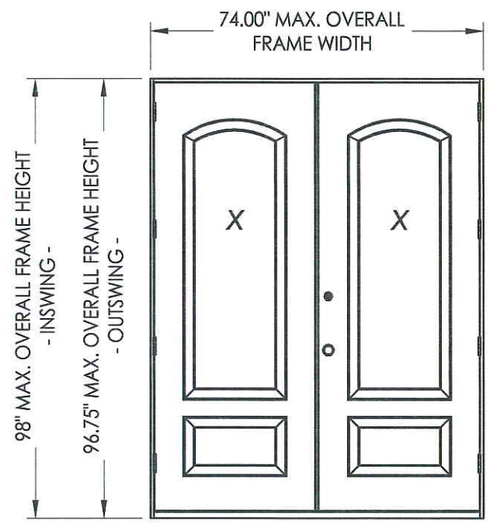

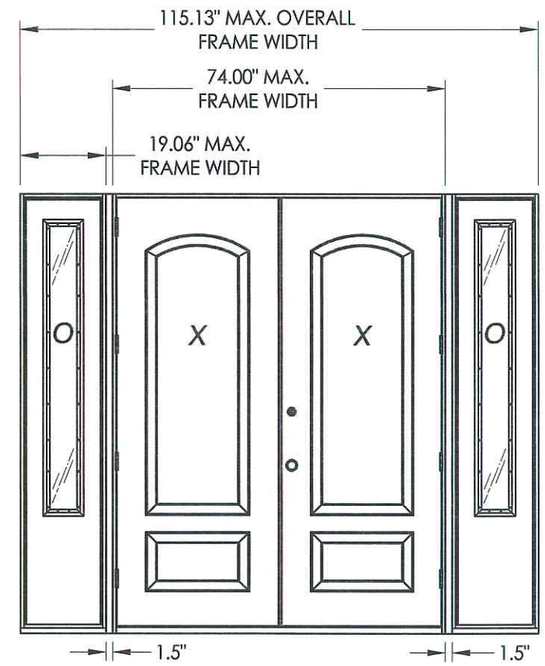

CONFIGURATION	MAX. FRAME DIMENSION	MAX. D.L.O. DIMENSION	DESIGN PRESSURE (PSF) INSWING		DESIGN PRESSURE (PSF) OUTSWING	
			POSITIVE	NEGATIVE	POSITIVE	NEGATIVE
XX	74.00" x 98.00"	N/A	+45.0	-45.0	+45.0	-45.0
OXXO	115.13" x 98.00"	7.0" x 63.13"	+45.0	-45.0	+45.0	-45.0

STATE OF TEXAS
LYNDON F. SCHMIDT
104123
LICENSED
PROFESSIONAL ENGINEER
1-5-10

Documents Prepared By: Lyndon F. Schmidt, P.E.
TEXAS P.E. #104123

RW BUILDING CONSULTANTS, INC.
P.O. Box 230 Valrico FL. 33595
Phone No.: 813.659.9197

TEXAS BOARD OF PROFESSIONAL ENGINEERS
CERTIFICATE OF REGISTRATION # F-11852

PRODUCT: MASTERGRAIN FIBERGLASS DOOR

PART OR ASSEMBLY: TYPICAL ELEVATION, DESIGN PRESSURES & GENERAL NOTES

REVISIONS

NO.	DATE	BY

DATE: 01/04/10
SCALE: N.T.S.
DWG. BY: JK
CHK. BY: LFS
DRAWING NO.: TX-4047
SHEET 1 OF 9

© 2010 R.W. BUILDING CONSULTANTS INC.

R:\A - Projects\Project Folders\proj 1501 - 1600\PF 1518\D. RWBC Drawings\FL-13320\TX 4044.dwg, TX-4047

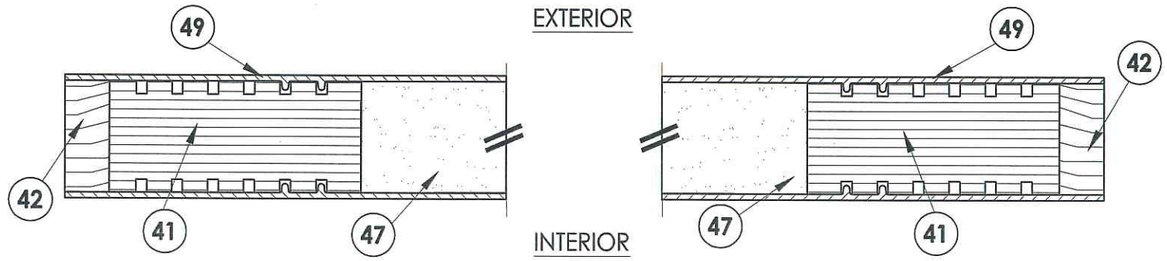

1/2 HORIZONTAL CROSS SECTION

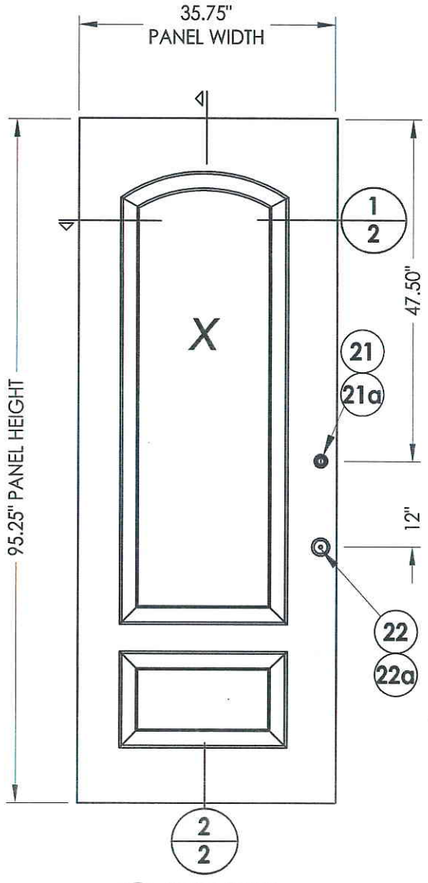

40 DOOR PANEL
Fiberglass

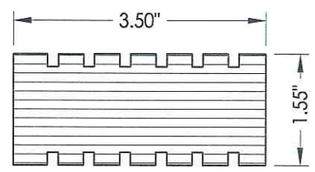

41 HINGE AND LATCH STILE
Reinforcement / LSL

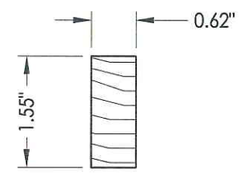

42 HINGE AND LATCH STILE
Wood

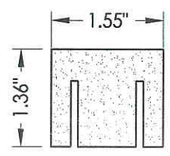

45 BOTTOM RAIL
Composite

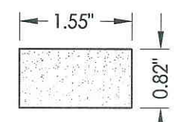

44 TOP RAIL
Composite

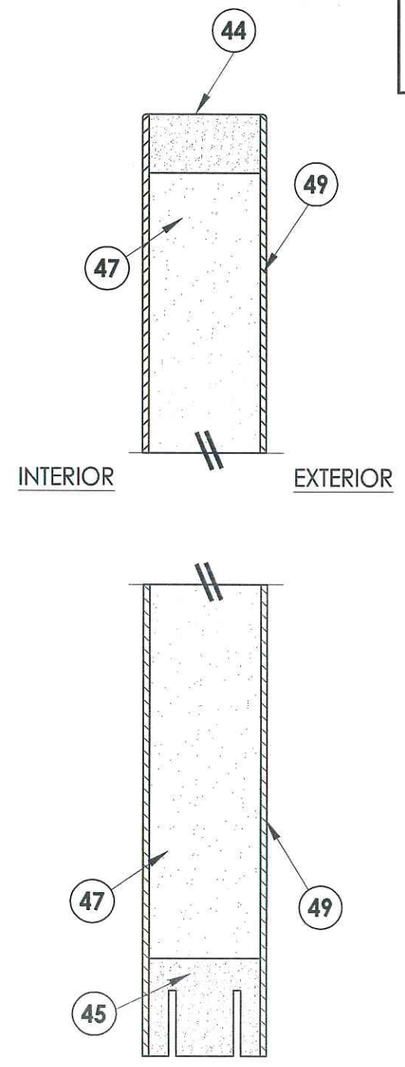

2/2 VERTICAL CROSS SECTION

STATE OF TEXAS
LYNDON F. SCHMIDT
104123
LICENSED PROFESSIONAL ENGINEER
1-5-10

Documents Prepared By: Lyndon F. Schmidt, P.E.
TEXAS P.E. #104123

RW BUILDING CONSULTANTS, INC.
P.O. Box 230 Valrico FL. 33595
Phone No.: 813.659.9197

TEXAS BOARD OF PROFESSIONAL ENGINEERS
CERTIFICATE OF REGISTRATION # F-11852

PRODUCT: MASTERGRAIN FIBERGLASS DOOR

PART OR ASSEMBLY: DOOR PANEL DETAILS

NO.	DATE	REVISIONS	BY

DATE: 01/04/10
SCALE: N.T.S.
DWG. BY: JK
CHK. BY: LFS
DRAWING NO.: TX-4047
SHEET 2 OF 9

© 2010 R.W. BUILDING CONSULTANTS INC.

R:\A - Projects\Project Folders\proj 1501 - 1600\PF 1518\D. RWBC Drawings\FL-13320\TX 4044.dwg, 2-7

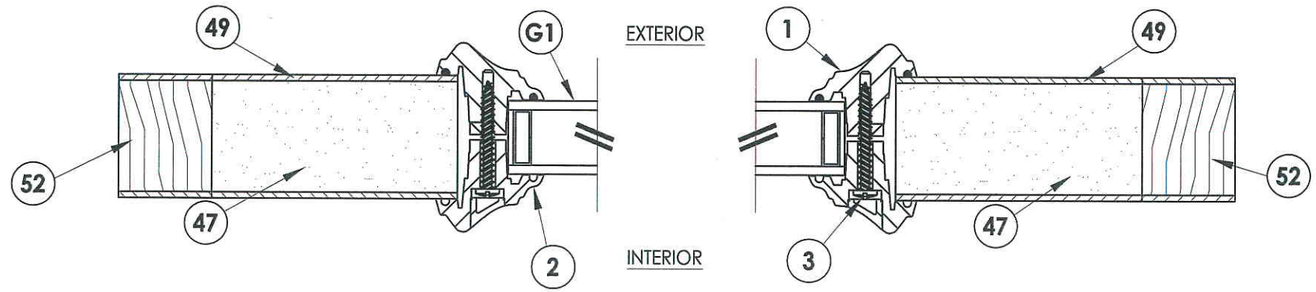

1/3 HORIZONTAL CROSS SECTION

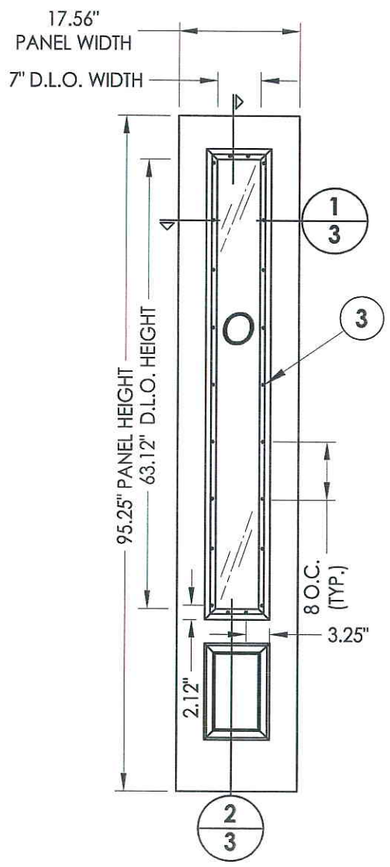

50 SIDELITE PANEL
Fiberglass

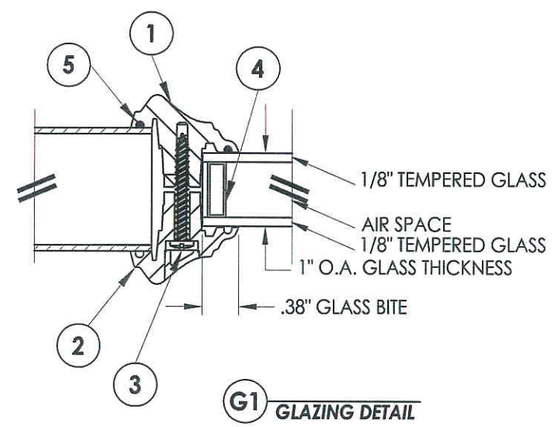

G1 GLAZING DETAIL

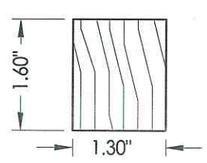

52 SIDELITE STILE
Wood

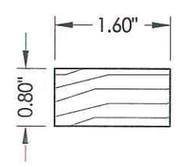

53 SIDELITE BOTTOM RAIL
Wood

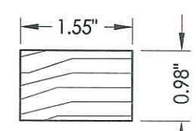

54 SIDELITE TOP RAIL
Wood

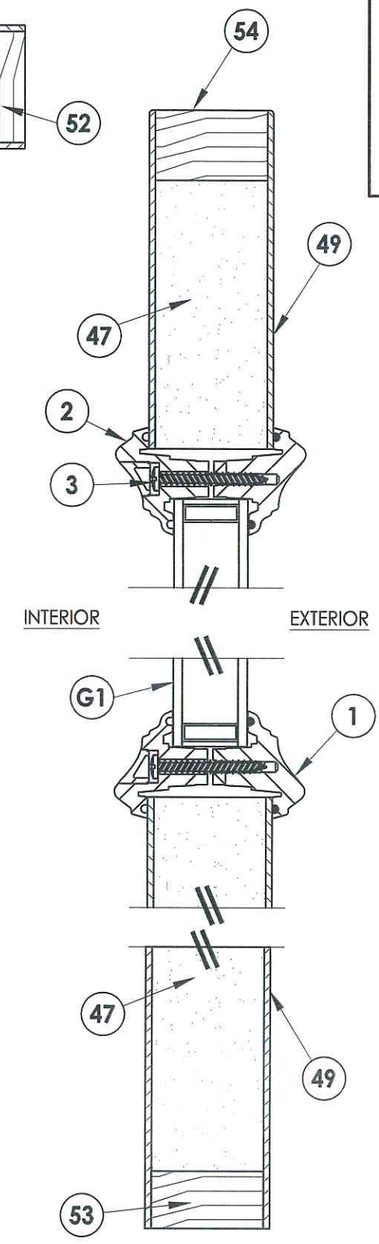

2/3 VERTICAL CROSS SECTION

STATE OF TEXAS
LYNDON F. SCHMIDT
104123
LICENSED PROFESSIONAL ENGINEER

Documents Prepared By: Lyndon F. Schmidt, P.E.
TEXAS P.E. #104123

RW BUILDING CONSULTANTS, INC.
P.O. Box 230 Valrico FL. 33595
Phone No.: 813.659.9197

TEXAS BOARD OF PROFESSIONAL ENGINEERS
CERTIFICATE OF REGISTRATION # F-11852

PRODUCT: MASTERGRAIN FIBERGLASS DOOR

PART OR ASSEMBLY: SIDELITE PANEL DETAILS AND GLAZING DETAIL

NO.	DATE	REVISIONS	BY

DATE: 01/04/10
SCALE: N.T.S.
DWG. BY: JK
CHK. BY: LFS
DRAWING NO.: TX-4047
SHEET 3 OF 9

© 2010 R.W. BUILDING CONSULTANTS INC.

R:\A - Projects\Project Folders\proj 1501 - 1600\PF 1518\D. RWBC Drawings\FL-13320\TX 4044.dwg, 3-7

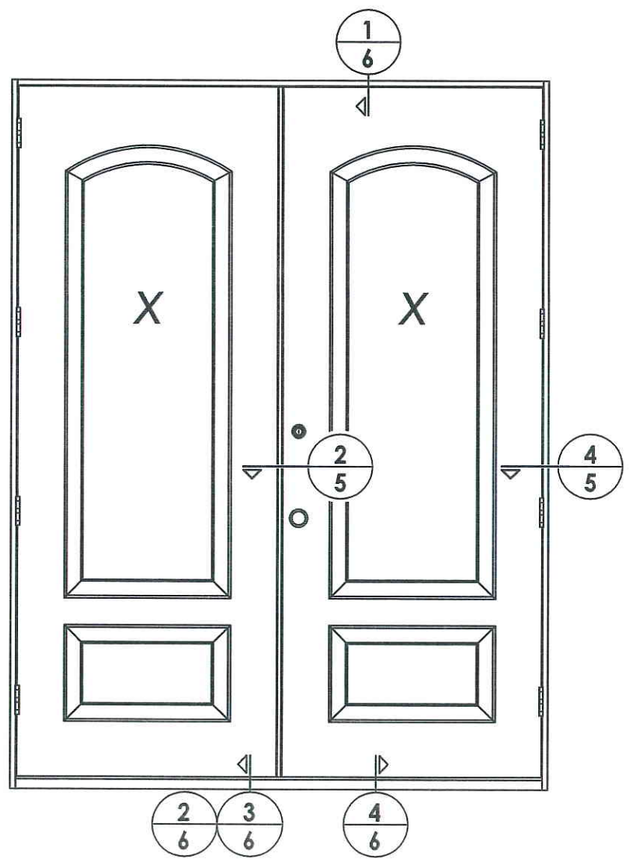

ELEVATION (XX)

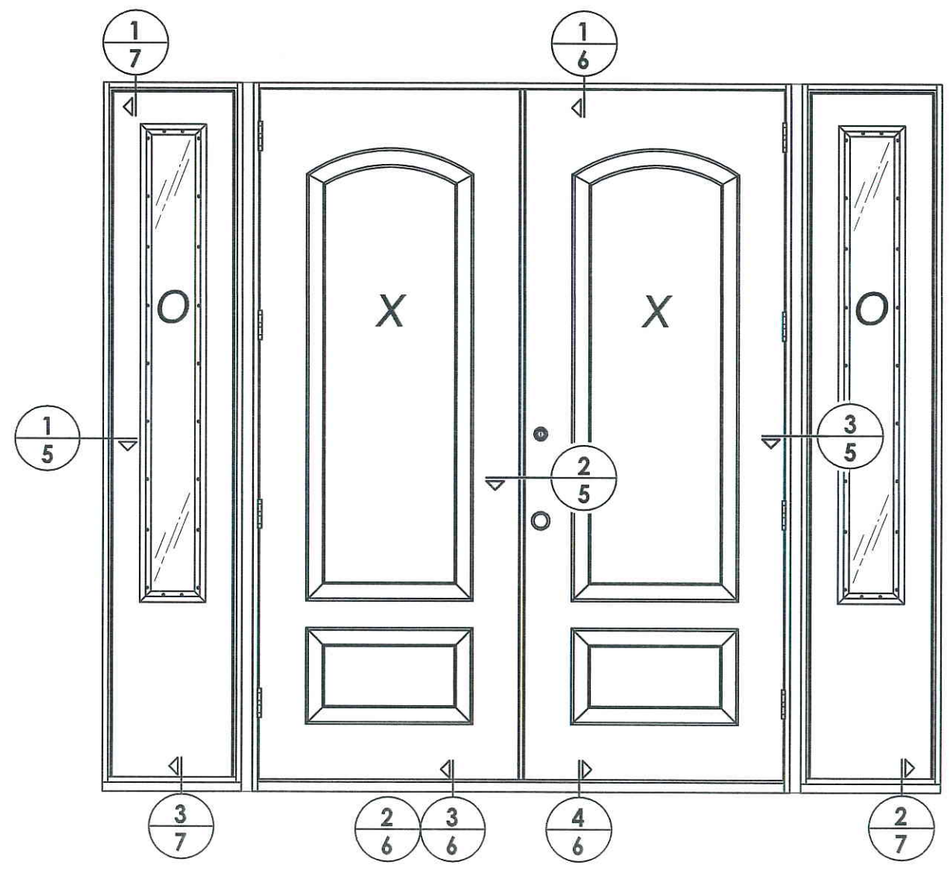

ELEVATION (OXXO)

STATE OF TEXAS
LYNDON F. SCHMIDT
104123
LICENSED PROFESSIONAL ENGINEER
1-5-10

Documents Prepared By: Lyndon F. Schmidt, P.E.
TEXAS P.E. #104123

RW BUILDING CONSULTANTS, INC.
P.O. Box 230 Valrico FL. 33595
Phone No.: 813.659.9197

TEXAS BOARD OF PROFESSIONAL ENGINEERS
CERTIFICATE OF REGISTRATION # F-11852

PRODUCT: MASTERGRAIN FIBERGLASS DOOR

PART OR ASSEMBLY: ELEVATIONS

NO.	DATE	REVISIONS	BY

DATE: 01/04/10
SCALE: N.T.S.
DWG. BY: JK
CHK. BY: LFS
DRAWING NO.: TX-4047
SHEET 4 OF 9

© 2010 R.W. BUILDING CONSULTANTS INC.

R:\A - Projects\Project Folders\proj 1501 - 1600\PF 1518\D. RWBC Drawings\FL-13320\TX 4044.dwg, 4-7

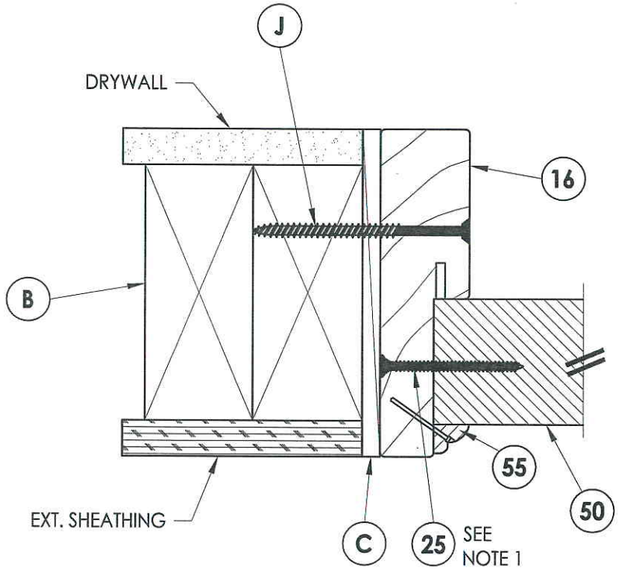

1/5 HORIZONTAL CROSS SECTION
Inswing shown - outswing also approved

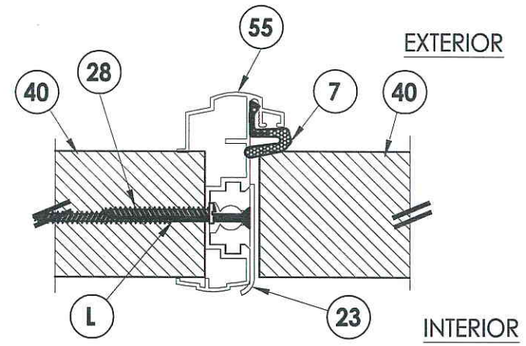

2/5 HORIZONTAL CROSS SECTION
Inswing shown - outswing also approved

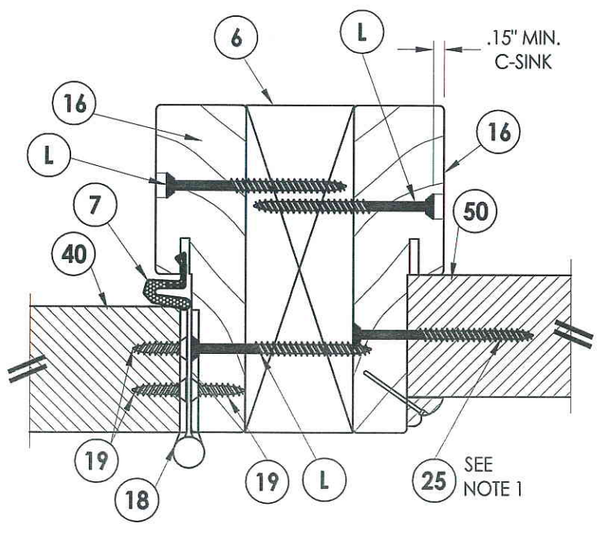

3/5 HORIZONTAL CROSS SECTION
Inswing shown - outswing also approved

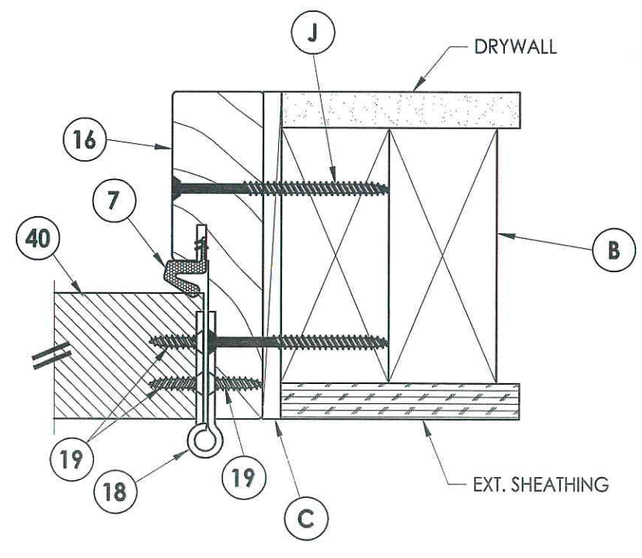

4/5 HORIZONTAL CROSS SECTION
Inswing shown - outswing also approved

NOTE:

1. Sidelite ass'y fastener; 6" from each end and 6 more screws equally spaced between. (8 screws total per jamb.)
2. Trim secured with 1" Brad Nail @ 6" O.C. (TYP).

STATE OF TEXAS
LYNDON F. SCHMIDT
104123
LICENSED PROFESSIONAL ENGINEER
1-5-10

Documents Prepared By: Lyndon F. Schmidt, P.E.
TEXAS P.E. #104123
RW BUILDING CONSULTANTS, INC.
P.O. Box 230 Valrico FL. 33595
Phone No.: 813.659.9197
TEXAS BOARD OF PROFESSIONAL ENGINEERS
CERTIFICATE OF REGISTRATION # F-11852

PRODUCT: MASTERGRAIN FIBERGLASS DOOR

PART OR ASSEMBLY: HORIZONTAL CROSS SECTIONS

NO.	DATE	BY

REVISIONS

DATE: 01/04/10
SCALE: N.T.S.
DWG. BY: JK
CHK. BY: LFS
DRAWING NO.: TX-4047
SHEET 5 OF 9

© 2010 R.W. BUILDING CONSULTANTS INC.

R:\A - Projects\Project Folders\proj 1501 - 1600\PF 1518\D. RWBC Drawings\FL-13320\TX 4044.dwg, 5-7

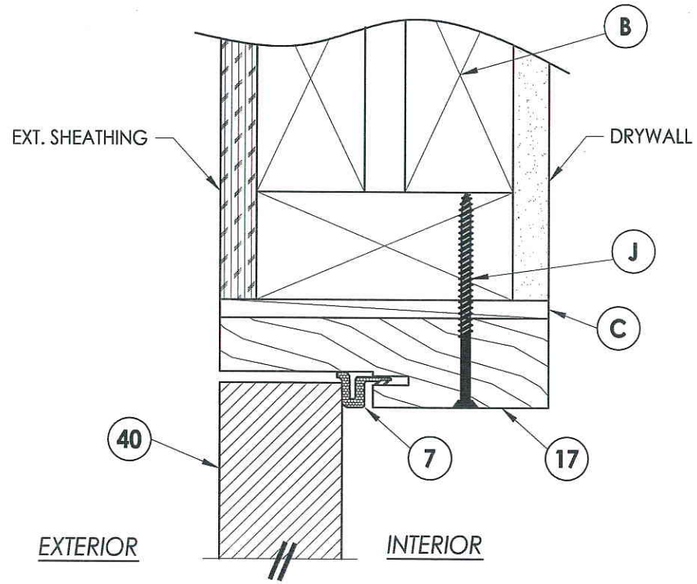

1/6 **VERTICAL CROSS SECTION**
Outswing shown
Inswing also approved

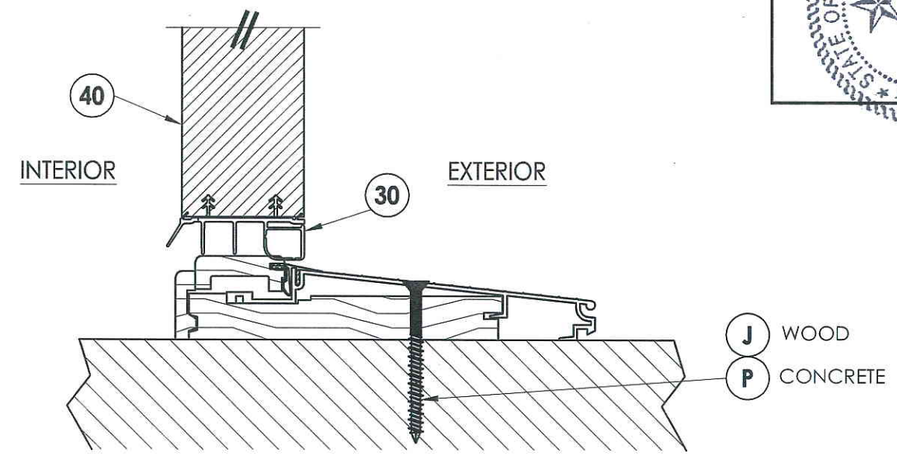

2/6 **VERTICAL CROSS SECTION**
Inswing configuration

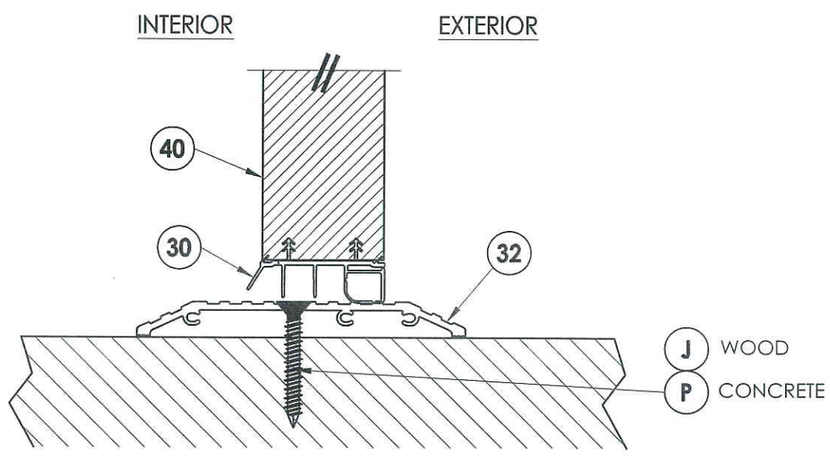

3/6 **VERTICAL CROSS SECTION**
Shown w/ ADA threshold

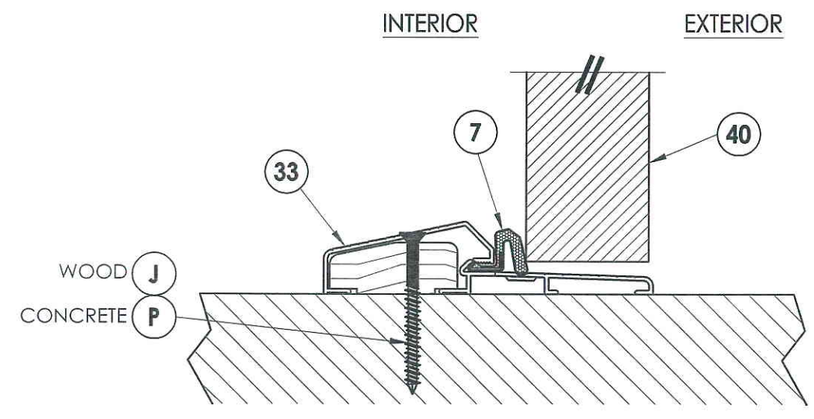

4/6 **VERTICAL CROSS SECTION**
Outswing configuration

STATE OF TEXAS
LYNDON F. SCHMIDT
104123
LICENSED PROFESSIONAL ENGINEER
7-5-10

Documents Prepared By: Lyndon F. Schmidt, P.E.
TEXAS P.E. #104123

RW BUILDING CONSULTANTS, INC.
P.O. Box 230 Valrico FL. 33595
Phone No.: 813.659.9197

TEXAS BOARD OF PROFESSIONAL ENGINEERS
CERTIFICATE OF REGISTRATION # F-11852

PRODUCT: MASTERGRAIN FIBERGLASS DOOR

PART OR ASSEMBLY: VERTICAL CROSS SECTIONS

NO.	DATE	BY

REVISIONS

DATE: 01/04/10
SCALE: N.T.S.
DWG. BY: JK
CHK. BY: LFS
DRAWING NO.: TX-4047
SHEET 6 OF 9

© 2010 R.W. BUILDING CONSULTANTS INC.

R:\A - Projects\Project Folders\proj 1501 - 1600\PF 1518\D. RWBC Drawings\FL-13320\TX 4044.dwg, 6-7

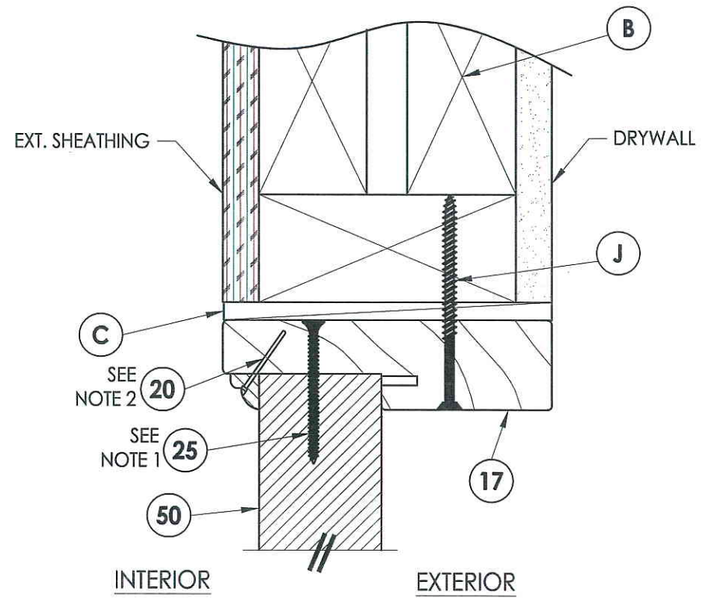

1/7 **VERTICAL CROSS SECTION**
Outswing shown
Inswing also approved

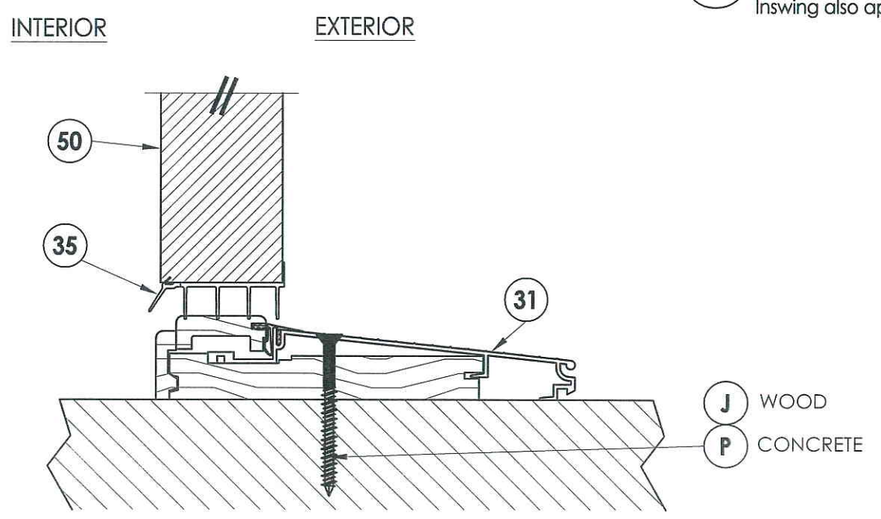

3/7 **VERTICAL CROSS SECTION**
Inswing configuration

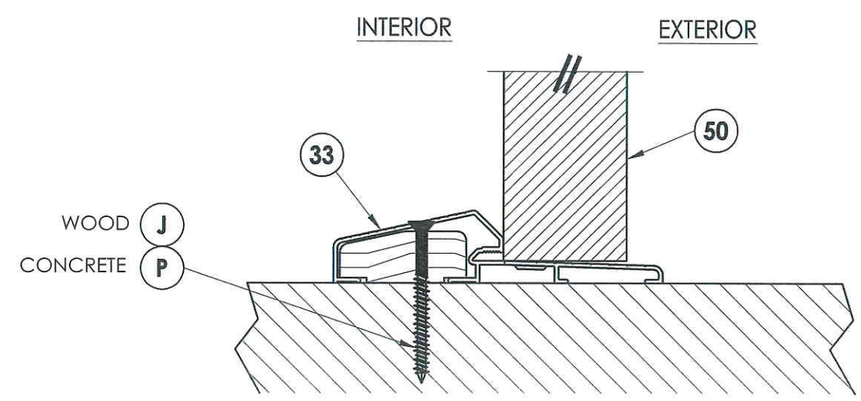

2/7 **VERTICAL CROSS SECTION**
Outswing configuration

NOTE:

1. Screws thru head jamb located 3" from each end.
2. Trim secured with 1" Brad Nail @ 6" O.C. (TYP).

STATE OF TEXAS
LYNDON F. SCHMIDT
104123
LICENSED PROFESSIONAL ENGINEER
1-5-10

Documents Prepared By: Lyndon F. Schmidt, P.E.
TEXAS P.E. #104123
RW BUILDING CONSULTANTS, INC.
P.O. Box 230 Valrico FL. 33595
Phone No.: 813.659.9197
TEXAS BOARD OF PROFESSIONAL ENGINEERS
CERTIFICATE OF REGISTRATION # F-11852

PRODUCT: MASTERGRAIN FIBERGLASS DOOR

PART OR ASSEMBLY: VERTICAL CROSS SECTIONS

NO.	DATE	REVISIONS	BY

DATE: 01/04/10
SCALE: N.T.S.
DWG. BY: JK
CHK. BY: LFS
DRAWING NO.: TX-4047
SHEET 7 OF 9

© 2010 R.W. BUILDING CONSULTANTS INC.

R:\A - Projects\Project Folders\proj 1501 - 1600\PF 1518\D. RWBC Drawings\FL-13320\TX 4044.dwg, 7-7

** Additional anchor required
for DP > 40 PSF (outswing only)

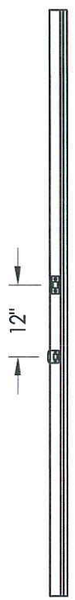

ASTRAGAL

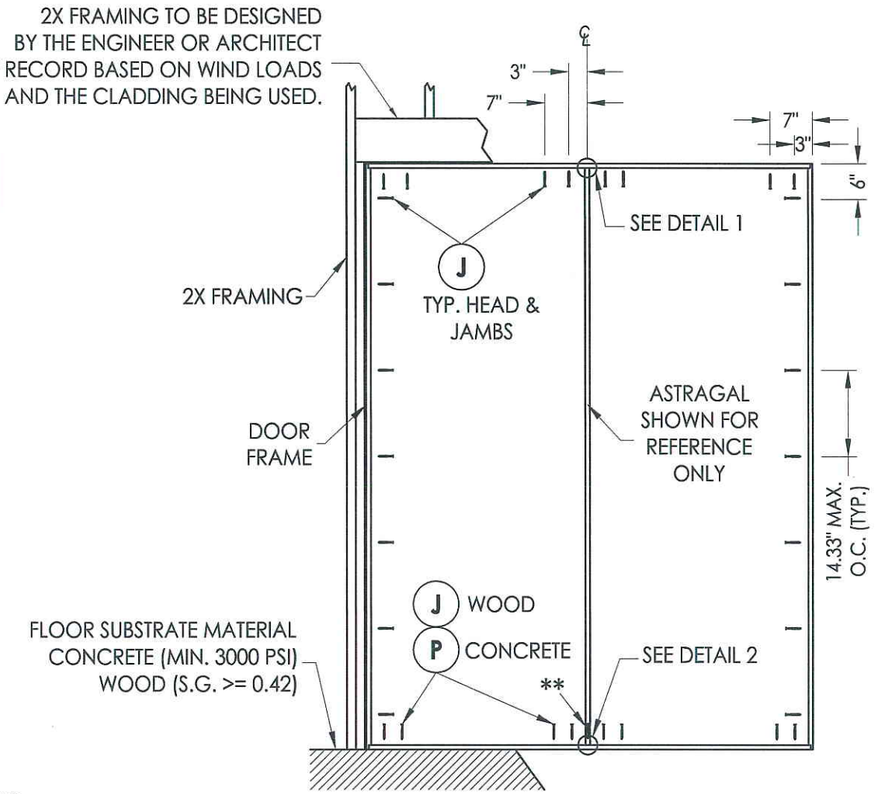

FRAME ANCHORING
Stud construction

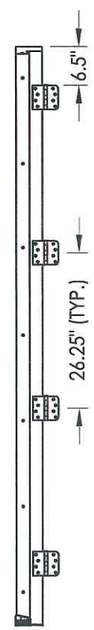

HINGE JAMB

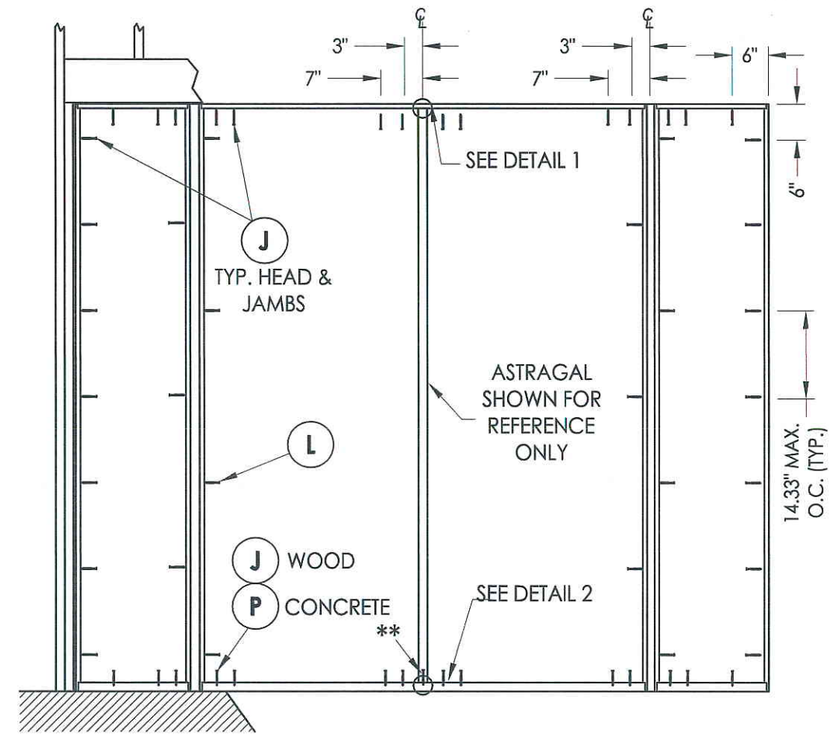

FRAME ANCHORING
Stud construction

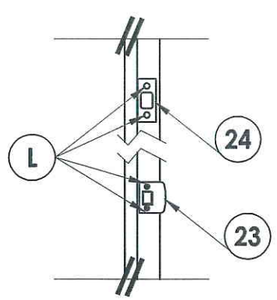

LATCH & DEADBOLT DETAIL

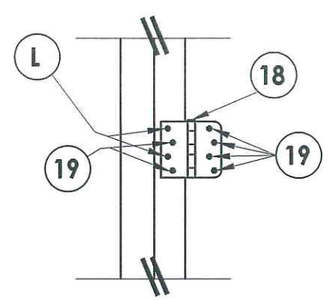

HINGE DETAIL

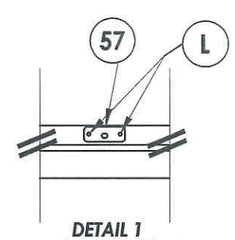

DETAIL 1
Astragal Strike Plate

DETAIL 2
Astragal Strike Plate
Outswing

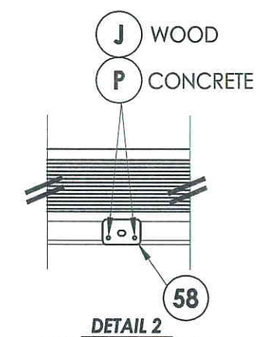

DETAIL 2
Astragal Strike Plate
Inswing

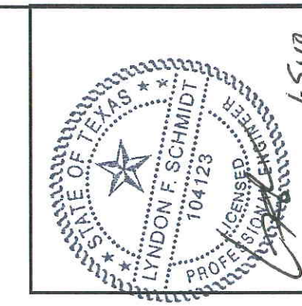

Documents Prepared By: Lyndon F. Schmidt, P.E.
TEXAS P.E. #104123

RW BUILDING CONSULTANTS, INC.
P.O. Box 230 Valrico FL. 33595
Phone No.: 813.659.9197

TEXAS BOARD OF PROFESSIONAL ENGINEERS
CERTIFICATE OF REGISTRATION # F-11852

PRODUCT: MASTERGRAIN FIBERGLASS DOOR

PART OR ASSEMBLY: FRAME ANCHORING

NO.	DATE	REVISIONS	BY

DATE: 01/04/10
SCALE: N.T.S.
DWG. BY: JK
CHK. BY: LFS
DRAWING NO.: TX-4047
SHEET 8 OF 9

© 2010 R.W. BUILDING CONSULTANTS INC.

R:\A - Projects\Project Folders\proj 1501 - 1600\PF 1518\D. RWBC Drawings\FL-13320\TX 4044.dwg, 8-7

CONCRETE ANCHOR NOTES:

1. Substitution of equal concrete anchors from a different supplier may have different edge distance and center distance requirements.
2. Concrete anchor locations at the corners may be adjusted to maintain the min. edge distance to mortar joints. If concrete anchor locations noted as "MAX. ON CENTER" must be adjusted to maintain the min. edge distance to mortar joints, additional concrete anchors may be required to ensure the "MAX. ON CENTER" dimensions are not exceeded.
3. Concrete anchor table:

ANCHOR TYPE	ANCHOR SIZE	MIN. EMBEDMENT	MIN. CLEARANCE TO MASONRY EDGE	MIN. CLEARANCE TO ADJACENT ANCHOR
ITW	3/16"	1-3/4"	2-5/8"	2-1/4"
ELCO	3/16"	1-3/4"	1"	3"

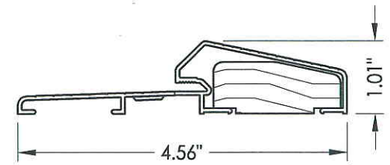

33 OUTSWING THRESHOLD

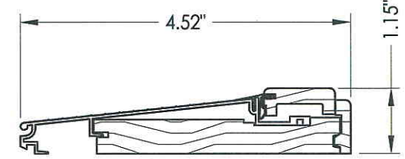

31 INSWING THRESHOLD

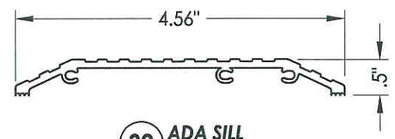

32 ADA SILL

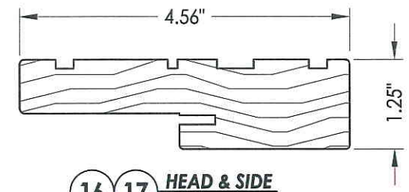

16 17 HEAD & SIDE Jamb

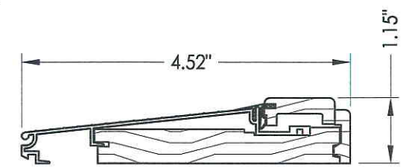

34 SIDELITE THRESHOLD

STATE OF TEXAS
LYNDON F. SCHMIDT
104123
LICENSED
PROFESSIONAL ENGINEER

1-5-10

Documents Prepared By: Lyndon F. Schmidt, P.E.
TEXAS P.E. #104123

RW BUILDING CONSULTANTS, INC.
P.O. Box 230 Valrico FL. 33595
Phone No.: 813.659.9197

TEXAS BOARD OF PROFESSIONAL ENGINEERS
CERTIFICATE OF REGISTRATION # F-11852

PRODUCT: MASTERGRAIN FIBERGLASS DOOR

PART OR ASSEMBLY: BILL OF MATERIALS

BILL OF MATERIALS

ITEM #	DESCRIPTION	MATERIAL
B	2X FRAMING SG >= 0.42	WOOD
C	1/4" MAX. SHIM SPACE	-
J	#10 X 3" PFH WS	STEEL
K	#9 X 2-1/2" PFH WS	STEEL
L	#10 X 2-1/2" PFH WOOD SCREW	STEEL
P	3/16" ELCO OR ITW PFH CONCRETE SCREW	STEEL
1	FEMALE LITE FRAME - MASTERGRAIN	POLYPROPYLENE
2	MALE LITE FRAME - MASTERGRAIN	POLYPROPYLENE
3	#8 X 1-3/4" PANHEAD SMS (LIGHT FRAME SCREW)	STEEL
4	ALUMINUM SPACER SYSTEM	ALUMINUM
5	SILICONE WEATHER SEAL MG #2500	SILICONE
6	2X MULLION SG > = 0.55	WOOD
7	WEATHER STRIP	FOAM
8	#10 X 1-1/2" PFH	STEEL
16	SIDE JAMB SG > = 0.42	WOOD
17	HEAD JAMB SG > = 0.42	WOOD
18	4" X 4" HINGE MIN 0.1" THICK	STEEL
19	#10 X 3/4" PFH WS	STEEL
20	1" BRAD NAIL	STEEL
21	KWIKSET DEADBOLT -SERIES 690 CP	STEEL
21A	COPPER CREEK DB2410 SC #8003 DEADBOLT	STEEL
22	KWIKSET LOCK -SERIES 690 CP PASSAGE	STEEL
22A	COPPER CREEK BK2040 SC# 8379 PASSAGE	STEEL
23	LATCH STRIKE PLATE	STEEL
24	DEADBOLT STRIKE PLATE	STEEL
25	#8 X 2-1/2" PFH WOOD SCREW	STEEL
26	SECURITY STRIKE PLATE	STEEL
30	DOOR BOTTOM SWEEP	VINYL
31	INSWING THRESHOLD	ALUM/COMP.
32	ADA THRESHOLD	ALUM.
33	OUTSWING THRESHOLD	ALUM./WOOD
34	SIDELITE THRESHOLD	ALUM./COMP.
35	SIDELITE SWEEP	VINYL
40	DOOR PANEL - SEE DOOR PANEL DETAIL SHEET FOR CONSTRUCTION DETAILS	-
41	HINGE AND LATCH REINFORCMENT	WOOD
42	HINGE AND LATCH STILE - SG >= 0.42	WOOD
44	TOP RAIL	COMP.
45	BOTTOM RAIL	COMP.
47	POLYEURETHANE FOAM	POLYEURETHANE
49	FIBERGLASS SKIN 0.08" MIN. THICKNESS	FIBERGLASS
50	SIDELITE PANEL - SEE SIDELITE PANEL DETAIL SHEET FOR CONSTRUCTION DETAILS	-
52	SIDELITE STILE - SG>= 0.42	WOOD
53	SIDELITE BOTTOM RAIL SG > = 0.42	WOOD
54	SIDELITE TOP RAIL SG > = 0.42	WOOD
55	SIDELITE TRIM	WOOD

NO.	DATE	BY

REVISIONS

DATE: 01/04/10
SCALE: N.T.S.
DWG. BY: JK
CHK. BY: LFS
DRAWING NO.: TX-4047
SHEET 9 OF 9

© 2010 R.W. BUILDING CONSULTANTS INC.

R:\A - Projects\Project Folders\proj 1501 - 1600\PF 1518\D. RWBC Drawings\FL-13320\TX 4044.dwg, 9-7