ATRIUM COMPANIES, INC.

332/388 SLIDING GLASS DOOR (NON-IMPACT)

INSTALLATION NOTES:

1. ONE (1) INSTALLATION ANCHORS ARE REQUIRED AT EACH ANCHOR LOCATION SHOWN.
2. THE NUMBER OF INSTALLATION ANCHORS DEPICTED IS THE MINIMUM NUMBER OF ANCHORS TO BE USED FOR PRODUCT INSTALLATION.
3. INSTALL INDIVIDUAL INSTALLATION ANCHORS WITHIN A TOLERANCE OF ±1/2 INCH OF THE DEPICTED LOCATION IN THE ANCHOR LAYOUT DETAIL (I.E., WITHOUT CONSIDERATION OF TOLERANCES). TOLERANCES ARE NOT CUMULATIVE FROM ONE INSTALLATION ANCHOR TO THE NEXT.
4. SHIM AS REQUIRED AT EACH INSTALLATION ANCHOR WITH LOAD BEARING SHIM(S). MAXIMUM ALLOWABLE SHIM STACK TO BE 1/4 INCH. SHIM WHERE SPACE OF 1/16 INCH OR GREATER OCCURS. SHIM(S) SHALL BE CONSTRUCTED OF HIGH DENSITY PLASTIC OR BETTER.
5. THROUGH FIN: FOR INSTALLATION INTO WOOD FRAMING USE *#8 WOOD SCREWS* OF SUFFICIENT LENGTH TO ACHIEVE *1 1/2 INCH* MINIMUM EMBEDMENT INTO WOOD SUBSTRATE.
6. THROUGH FRAME: FOR INSTALLATION INTO WOOD FRAMING USE *#10 WOOD SCREWS* OF SUFFICIENT LENGTH TO ACHIEVE *1 1/2 INCH* MINIMUM EMBEDMENT INTO WOOD SUBSTRATE.
7. THROUGH FRAME:FOR INSTALLATION THROUGH 1X BUCK TO CONCRETE/MASONRY, OR DIRECTLY INTO CONCRETE/MASONRY, USE *3/16 INCH DIAMETER ITW TAPCON* OF SUFFICIENT LENGTH TO ACHIEVE *1 1/4 INCH* MINIMUM EMBEDMENT.
8. MINIMUM EMBEDMENT AND EDGE DISTANCE EXCLUDE WALL FINISHES, INCLUDING BUT NOT LIMITED TO STUCCO, FOAM, BRICK VENEER, AND SIDING.
9. INSTALLATION ANCHORS AND ASSOCIATED HARDWARE MUST BE MADE OF CORROSION RESISTANT MATERIAL OR HAVE A CORROSION RESISTANT COATING.
10. FOR HOLLOW BLOCK AND GROUT FILLED BLOCK, DO NOT INSTALL INSTALLATION ANCHORS INTO MORTAR JOINTS. EDGE DISTANCE IS MEASURED FROM FREE EDGE OF BLOCK OR EDGE OF MORTAR JOINT INTO FACE SHELL OF BLOCK.
11. INSTALLATION ANCHORS SHALL BE INSTALLED IN ACCORDANCE WITH ANCHOR MANUFACTURER'S INSTALLATION INSTRUCTIONS, AND ANCHORS SHALL NOT BE USED IN SUBSTRATES WITH STRENGTHS LESS THAN THE MINIMUM STRENGTH SPECIFIED BY THE ANCHOR MANUFACTURER.
12. INSTALLATION ANCHOR CAPACITIES FOR PRODUCTS HEREIN ARE BASED ON SUBSTRATE MATERIALS WITH THE FOLLOWING PROPERTIES:
    A. WOOD - MINIMUM SPECIFIC GRAVITY OF 0.42.
    B. CONCRETE - MINIMUM COMPRESSIVE STRENGTH OF 3000 PSI.
    C. MASONRY - STRENGTH CONFORMANCE TO ASTM C-90.

GENERAL NOTES:

1. THE PRODUCT SHOWN HEREIN IS DESIGNED AND MANUFACTURED TO COMPLY WITH THE 2006 IRC/IBC AND TEXAS REVISIONS AND HAS BEEN EVALUATED ACCORDING TO THE FOLLOWING:
   - AAMA/WDMA/CSA 101/I.S.2/A440-05
   - AAMA/WDMA/CSA 101/I.S.2/A440-08
2. ADEQUACY OF THE EXISTING STRUCTURAL CONCRETE/MASONRY AND 2X FRAMING AS A MAIN WIND FORCE RESISTING SYSTEM CAPABLE OF WITHSTANDING AND TRANSFERRING APPLIED PRODUCT LOADS TO THE FOUNDATION IS THE RESPONSIBILITY OF THE ENGINEER OR ARCHITECT OF RECORD FOR THE PROJECT OF INSTALLATION.
3. 1X AND 2X BUCKS (WHEN USED) SHALL BE DESIGNED AND ANCHORED TO PROPERLY TRANSFER ALL LOADS TO THE STRUCTURE. BUCK DESIGN AND INSTALLATION IS THE RESPONSIBILITY OF THE ENGINEER OR ARCHITECT OF RECORD FOR THE PROJECT OF INSTALLATION.
4. THE INSTALLATION DETAILS DESCRIBED HEREIN ARE GENERIC AND MAY NOT REFLECT ACTUAL CONDITIONS FOR A SPECIFIC SITE. IF SITE CONDITIONS CAUSE INSTALLATION TO DEVIATE FROM THE REQUIREMENTS DETAILED HEREIN, A LICENSED ENGINEER OR ARCHITECT SHALL PREPARE SITE SPECIFIC DOCUMENTS FOR USE WITH THIS DOCUMENT.
5. APPROVED IMPACT PROTECTIVE SYSTEM IS REQUIRED ON THIS PRODUCT IN AREAS REQUIRING IMPACT RESISTANCE.
6. DOOR FRAME MATERIAL: VINYL/PVC
7. GLASS MEETS THE REQUIREMENTS OF ASTM E 1300GLASS CHARTS. SEE SHEET 4 FOR GLAZING DETAIL.
8. DESIGNATIONS "X" AND "O" STAND FOR THE FOLLOWING:
   X: OPERABLE PANEL
   O: FIXED PANEL
9. APPROVED CONFIGURATION:
   - 2 TRACK: OX, XO

TABLE OF CONTENTS

SHEET	REVISION	SHEET DESCRIPTION
1	A	INSTALLATION & GENERAL NOTES
2	A	ELEVATIONS & ANCHOR LAYOUTS
3	A	ELEVATIONS & ANCHOR LAYOUTS
4	A	ELEVATIONS & ANCHOR LAYOUTS
5	A	VERTICAL SECTIONS & GLAZING DETAIL
6	A	HORIZONTAL SECTIONS

DESIGN PRESSURE RATING

SIZE	DESIGN PRESSURE	MISSILE IMPACT RATING
72" X 95.5" *	+40.0 / -40.0 PSF	NON-IMPACT
70.75" X 95.5"	+50.0 / -50.0 PSF	
72" X 81.5" *	+50.0 / -50.0 PSF	
94.75" X 79.5"	+50.0 / -50.0 PSF	

*UNIT USES ALUMINUM REINFORCEMENTS, ALL OTHERS USE STEEL

ATRIUM COMPANIES, INC.
9001 AMBASSADOR ROW
DALLAS, TEXAS 75247
PH: (214) 637-2696 FX: (214) 424-6734

TITLE: SERIES 332/388 SLIDING GLASS DOOR INSTALLATION & GENERAL NOTES

PREPARED BY: BUILDING DROPS
398 E DANIA BEACH BLVD, #338
DANIA BEACH, FL 33004
PH: (954) 399-8478 FX: (954) 744-4738

REVISIONS

DESCRIPTION	BY	DATE
TESTING UPDATE	SM	07.09.14

ALEXIS SPYROU
102957
LICENSED
PROFESSIONAL ENGINEER
7-3-14

ALEXIS SPYROU, P.E.
TEXAS P.E. LICENSE NO. 102957
398 E DANIA BEACH BLVD, #338
DANIA BEACH, FL 33004
TBPE FIRM NO. 13734

DATE: 06.23.14
DWN BY: SM
CHK BY: HFN
SCALE: NTS
DWG #: ATR058
SHEET: 1 OF 6

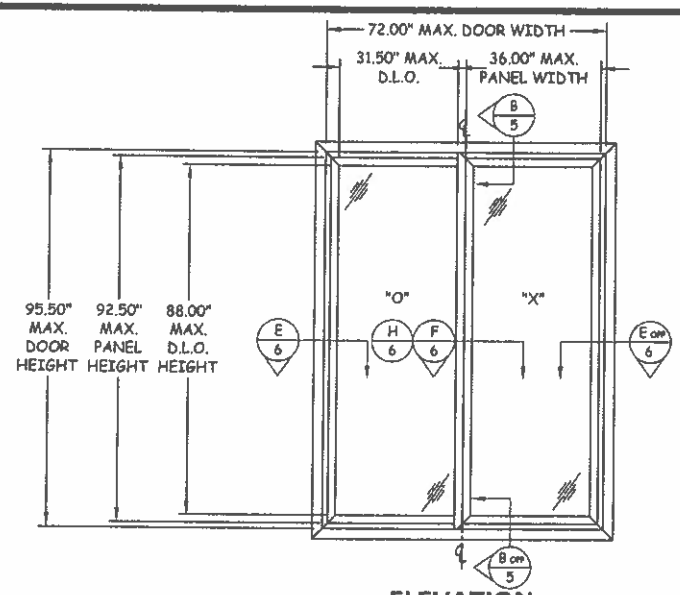

ELEVATION

EXTERIOR VIEW - FIN INSTALLATION

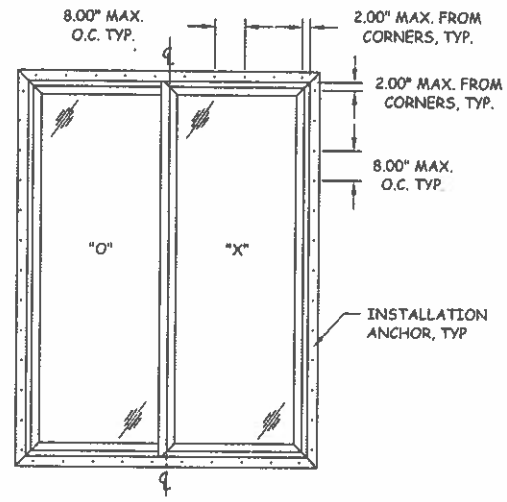

ANCHOR LAYOUT

FIN INSTALLATION

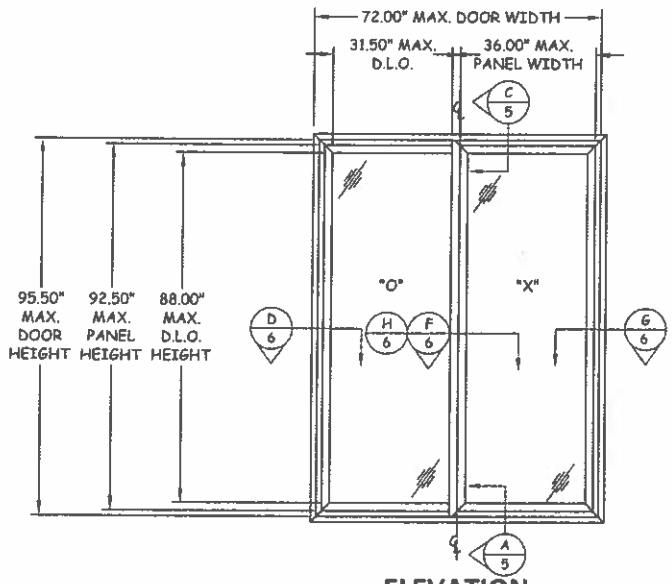

ELEVATION

EXTERIOR VIEW - FINLESS INSTALLATION

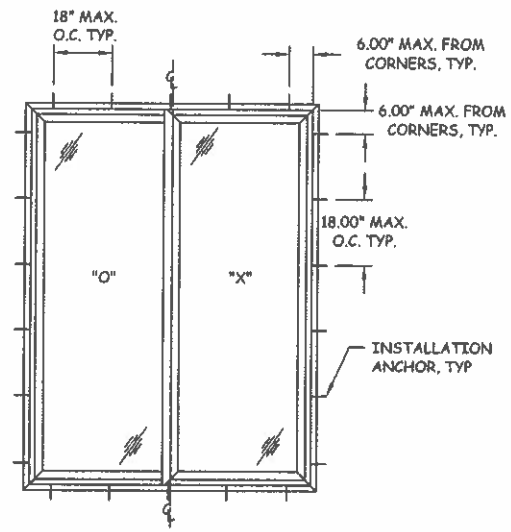

ANCHOR LAYOUT

FINLESS INSTALLATION

ATRIUM COMPANIES INC
9001 AMBASSADOR ROW
DALLAS, TEXAS 75247
PH: (214) 637-2696 FX: (214) 424-6734

TITLE: SERIES 332/388 SLIDING GLASS DOOR ELEVATIONS & ANCHOR LAYOUTS

PREPARED BY:
BUILDING DROPS
398 E DANIA BEACH BLVD, #338
DANIA BEACH, FL 33004
PH: (954) 399-8478 FX: (954) 744-4738

REVISIONS

NO.	DESCRIPTION	BY	DATE
A	TESTING UPDATE	SM	07.09.14

STATE OF TEXAS
ALEXIS SPYROU
102957
LICENSED
PROFESSIONAL ENGINEER
7-31-14

DATE:	DWN BY:	CHK BY:	SCALE:
06.23.14	SM	HFN	NTS

DWG #: ATR058

SHEET: 2 OF 6

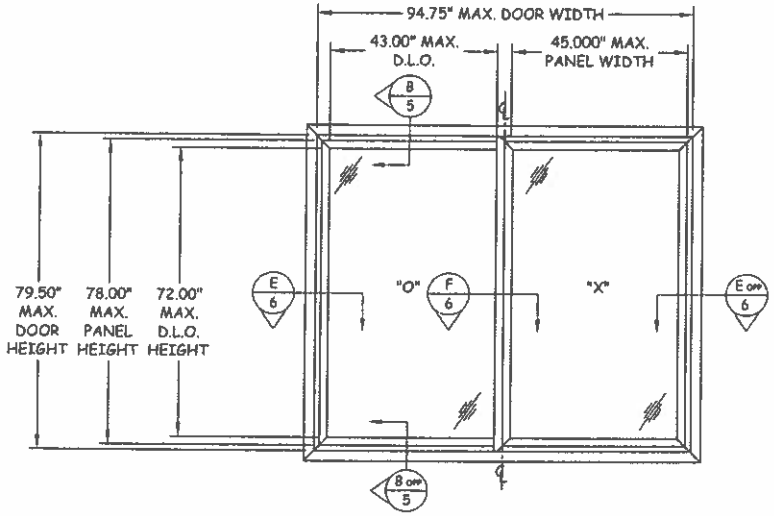

ELEVATION

EXTERIOR VIEW - FIN INSTALLATION

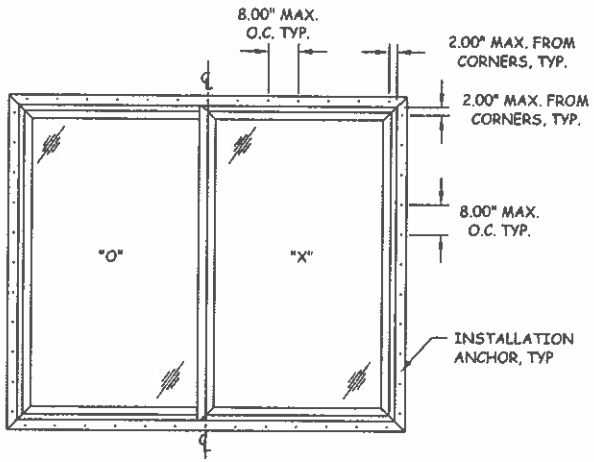

ANCHOR LAYOUT

FIN INSTALLATION

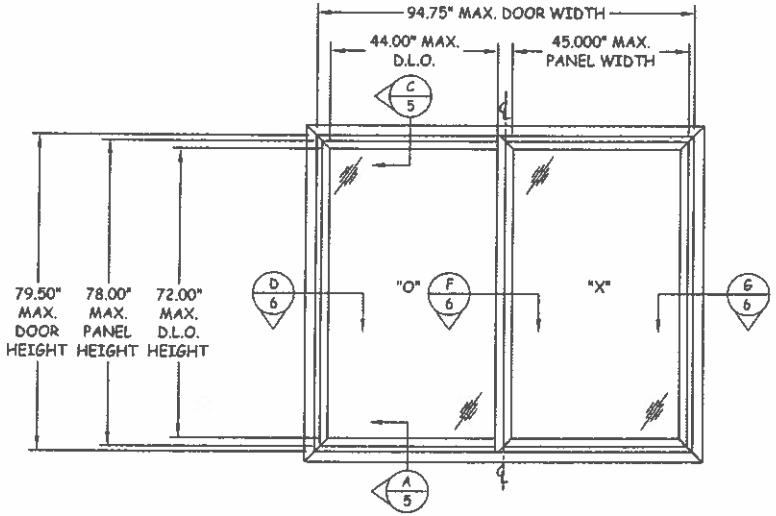

ELEVATION

EXTERIOR VIEW - FINLESS INSTALLATION

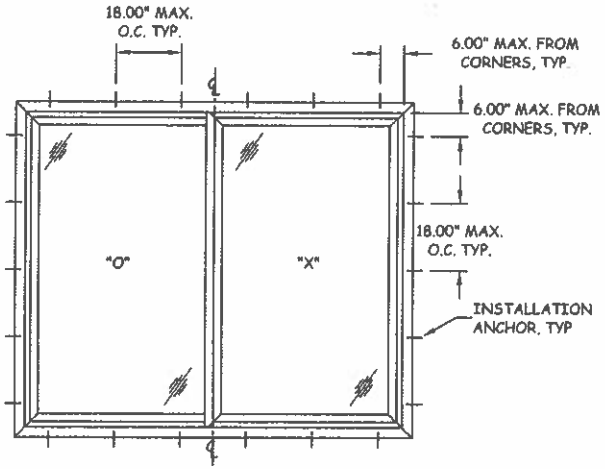

ANCHOR LAYOUT

FINLESS INSTALLATION

ATRIUM COMPANIES INC
9001 AMBASSADOR ROW
DALLAS, TEXAS 75247
PH: (214) 637-2696 FX: (214) 424-6734

TITLE: SERIES 332/388 SLIDING GLASS DOOR ELEVATIONS & ANCHOR LAYOUTS

PREPARED BY:
BUILDING DROPS
398 E DANIA BEACH BLVD, #338
DANIA BEACH, FL 33004
PH: (954) 399-8478 FX: (954) 744-4738

REVISIONS

DESCRIPTION	BY	DATE
TESTING UPDATE	SM	07.09.14

STATE OF TEXAS
ALEXIS SPYROU
102957
LICENSED
PROFESSIONAL ENGINEER
23/14

DATE: 06.23.14
DWN BY: SM
CHK BY: HFN
SCALE: NTS

DWG #: ATR058

SHEET: 3 OF 6

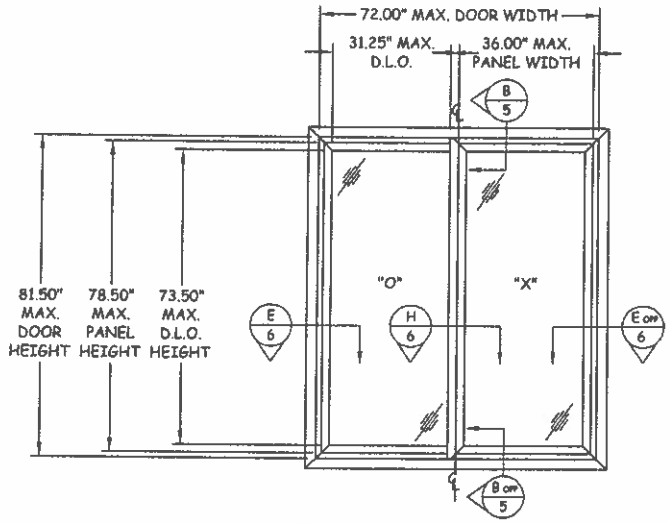

ELEVATION

EXTERIOR VIEW - FIN INSTALLATION

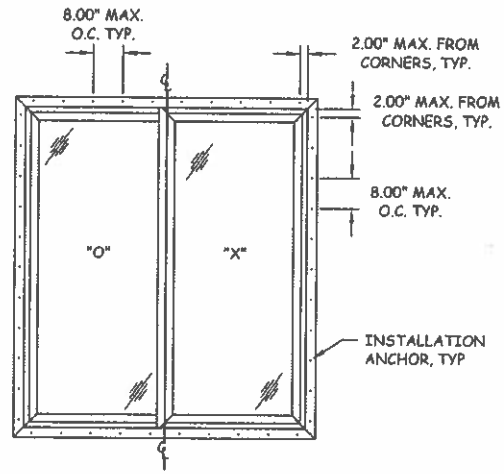

ANCHOR LAYOUT

FIN INSTALLATION

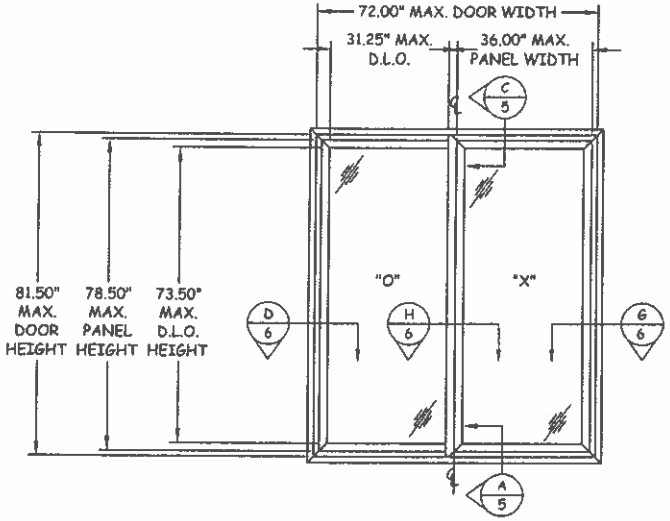

ELEVATION

EXTERIOR VIEW - FINLESS INSTALLATION

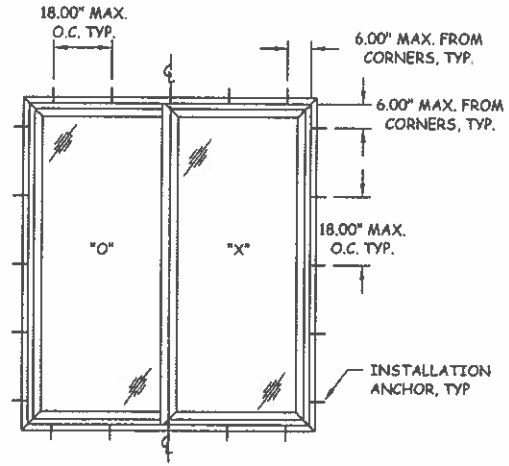

ANCHOR LAYOUT

FINLESS INSTALLATION

ATRIUM COMPANIES INC
9001 AMBASSADOR ROW
DALLAS, TEXAS 75247
PH: (214) 637-2696 FX: (214) 424-6734

TITLE: SERIES 332/388 SLIDING GLASS DOOR ELEVATIONS & ANCHOR LAYOUTS

PREPARED BY:
BUILDING DROPS
398 E DANIA BEACH BLVD. #338
DANIA BEACH, FL 33004
PH: (954) 399-8478 FX: (954) 744-4738

REVISIONS

NO.	DESCRIPTION	BY	DATE
A	TESTING UPDATE	SM	07.09.14

STATE OF FLORIDA
ALEXIS SRYHOL
102957
LICENSED
PROFESSIONAL ENGINEER
7/3/14

DATE: 06.23.14
DWN BY: SM
CHK BY: HFN
SCALE: NTS

DWG #: ATR058

SHEET: 4 OF 6

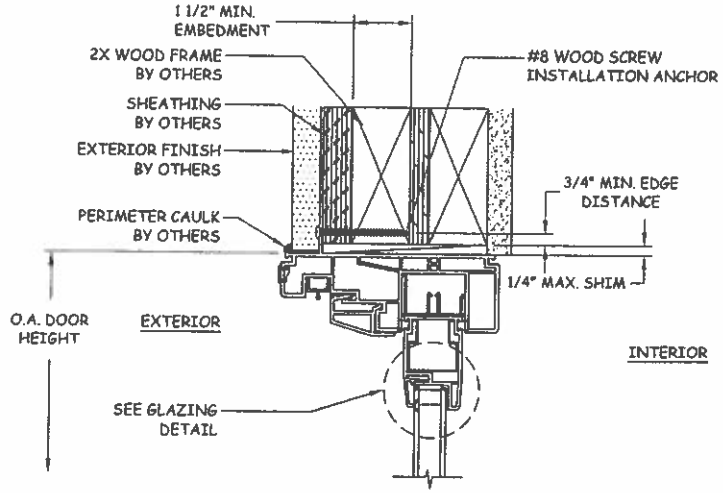

B/5 VERTICAL SECTION

2X WOOD FRAME - HEAD
FIN INSTALLATION

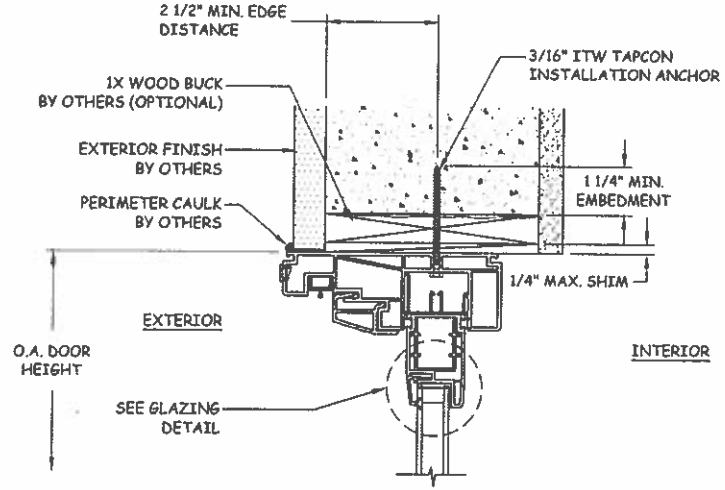

C/5 VERTICAL SECTION

CONCRETE/MASONRY - HEAD
FINLESS INSTALLATION WITH WOOD BUCK
OR DIRECTLY TO CONCRETE/MASONRY

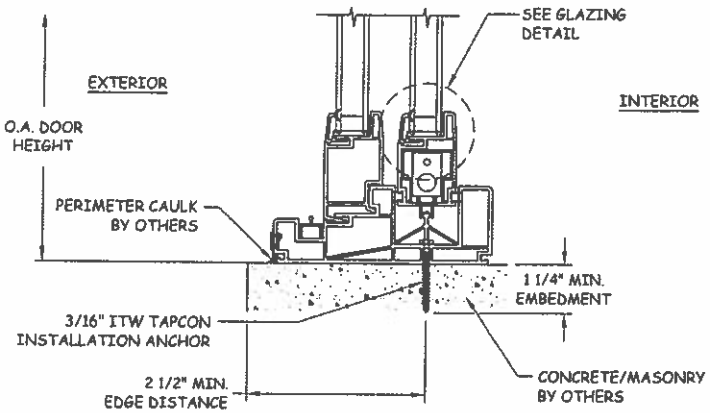

A/5 VERTICAL SECTION

CONCRETE/MASONRY - SILL
FINLESS INSTALLATION

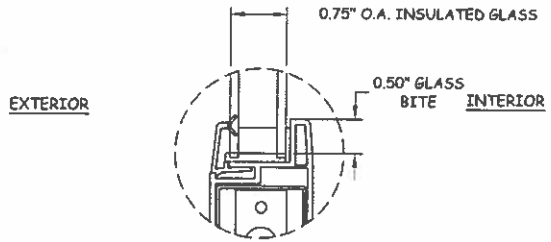

GLAZING DETAIL

NOTES:
1. GLASS THICKNESS AND TYPE SHALL COMPLY WITH ASTM E 1300 REQUIREMENT GLASS CHARTS.
2. ALL GLAZING CONFIGURATIONS SHALL COMPLY WITH SAFETY GLAZING REQUIREMENTS OUTLINED IN THE 2006 IRC/IBC SECTION 2406.

ATRIUM COMPANIES INC
9001 AMBASSADOR ROW
DALLAS, TEXAS 75247
PH: (214) 637-2696 FX: (214) 424-6734

TITLE: SERIES 332/388 SLIDING GLASS DOOR VERTICAL SECTIONS & GLAZING DETAIL

PREPARED BY: BUILDING DROPS
398 E DANIA BEACH BLVD, #338
DANIA BEACH, FL 33004
PH: (954) 399-8478 FX: (954) 744-4738

REVISIONS

NO.	DESCRIPTION	BY	DATE
	TESTING UPDATE	SM	07.09.14

STATE OF FLORIDA
ALEXIS SPYROU
102957
LICENSED PROFESSIONAL ENGINEER
7/3/14

DATE: 06.23.14
DWN BY: SM
CHK BY: HFN
SCALE: NTS
DWG #: ATR058
SHEET: 5 OF 6

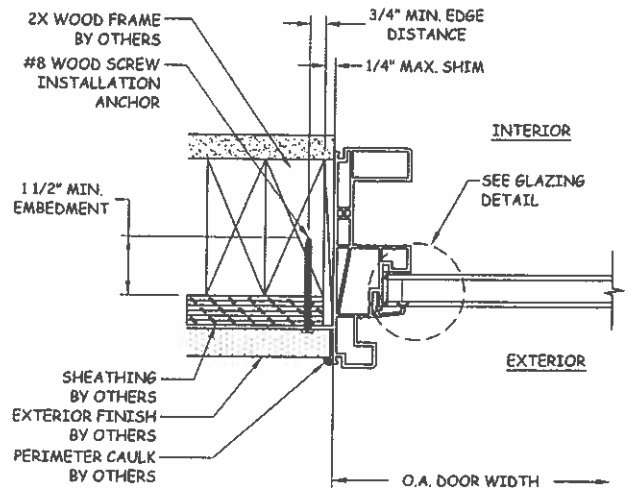

E/6 HORIZONTAL SECTION
2X WOOD FRAME - JAMB
FIN INSTALLATION

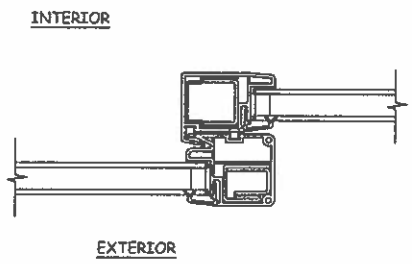

F/6 HORIZONTAL SECTION
INTERLOCK
STEEL REBAR

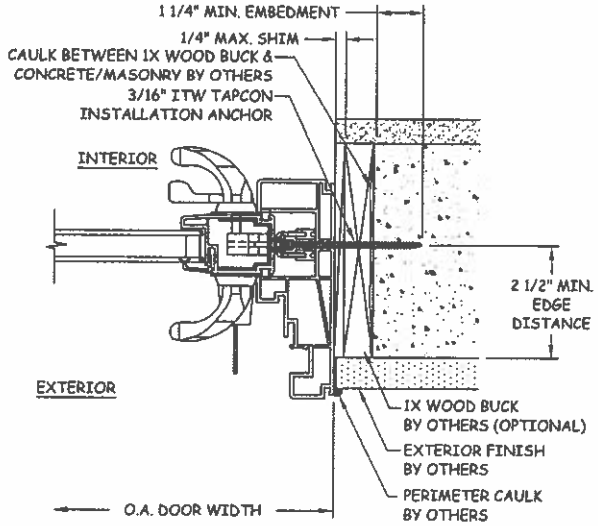

G/6 HORIZONTAL SECTION
CONCRETE/MASONRY - JAMB
FINLESS INSTALLATION WITH WOOD BUCK
OR DIRECTLY TO CONCRETE/MASONRY

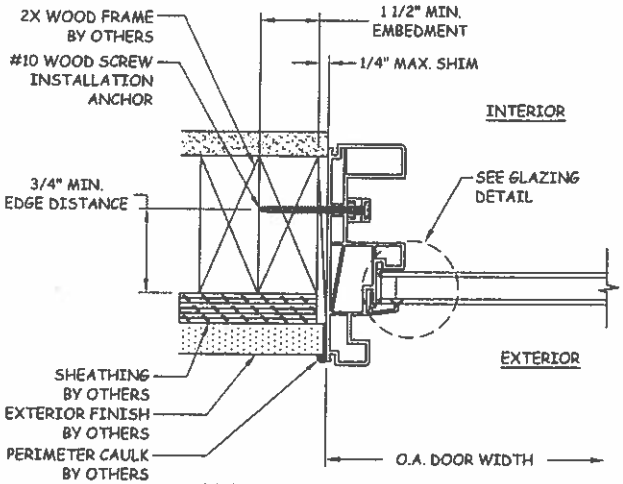

D/6 HORIZONTAL SECTION
2X WOOD FRAME - JAMB
FINLESS INSTALLATION

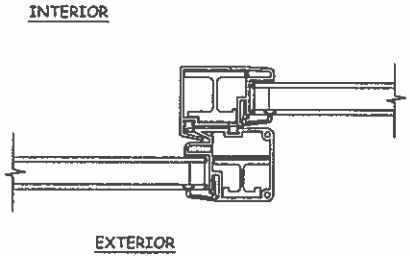

H/6 HORIZONTAL SECTION
INTERLOCK
ALUMINUM REBAR

ATRIUM COMPANIES INC

9001 AMBASSADOR ROW
DALLAS, TEXAS 75247
PH: (214) 637-2696 FX: (214) 424-6734

TITLE: SERIES 332/388 SLIDING GLASS DOOR HORIZONTAL SECTIONS

PREPARED BY:
BUILDING DROPS
398 E DANIA BEACH BLVD. #338
DANIA BEACH, FL 33004
PH: (954) 399-8478 FX: (954) 744-4738

REVISIONS

NO.	DESCRIPTION	BY	DATE
A	TESTING UPDATE	SM	07.09.14

STATE OF FLORIDA
ALEXIS SPYROU
102957
LICENSED
PROFESSIONAL ENGINEER
7-3-14

DATE: 06.23.14
DWN BY: SM
CHK BY: HFN
SCALE: NTS

DWG #: ATR058

SHEET: 6 OF 6