THERMA TRU®

118 INDUSTRIAL DR., EDGERTON, OH 43517
TEL. (419)298-1740

"SMOOTH STAR", "FIBER CLASSIC", "CLASSIC CRAFT" & "CLASSIC CRAFT RUSTIC" GLAZED FIBERGLASS DOOR W/SIDELITES INSWING / OUTSWING "IMPACT"

EVALUATED FOR USE IN THE STATE OF TEXAS

The Fiberglass Glazed Door described herein complies with the 2006 International Residential Code (IRC), Sections R301 & R613 and the 2006 International Building Code (IBC), Sections 1405.12, 1609, 1714.5, 2403 and 2404 (including Texas revisions) subject to the following conditions:

1. Anchors shall be as listed and spaced as shown in the details. Anchor embedment to base material shall be beyond wall dressing or stucco.
2. This system has been tested and evaluated as a large missile impact protective system for installation in the Seaward, Inland I and Inland II areas. This product meets missile level "D" as defined in ASTM E 1996.
3. Allowable design pressure requirements must be equal to or less than the design pressure rating shown in the design pressure chart, sheet 1 of this drawing.
4. Conditions not covered by this drawing are subject to further engineering analysis.
5. Fiber-Classic and Smooth-Star Door and Sidelite panels require the use of "J" part numbers. These door and sidelite panels must be stained or painted within six months of installation.

TABLE OF CONTENTS

SHEET #	DESCRIPTION
1	TYPICAL ELEVATION, DESIGN PRESSURES & GENERAL NOTES
2	"SMOOTH STAR" DOOR/SIDELITE PANEL DETAILS
3	"CLASSIC CRAFT" & "CLASSIC CRAFT RUSTIC" DOOR/SIDELITE PANEL DETAILS
4	"FIBER CLASSIC" DOOR/SIDELITE PANEL DETAILS
5	HORIZONTAL CROSS SECTIONS
6	VERTICAL CROSS SECTIONS
7	VERTICAL CROSS SECTIONS
8	FRAME ANCHORING
9	BILL OF MATERIALS & COMPONENTS

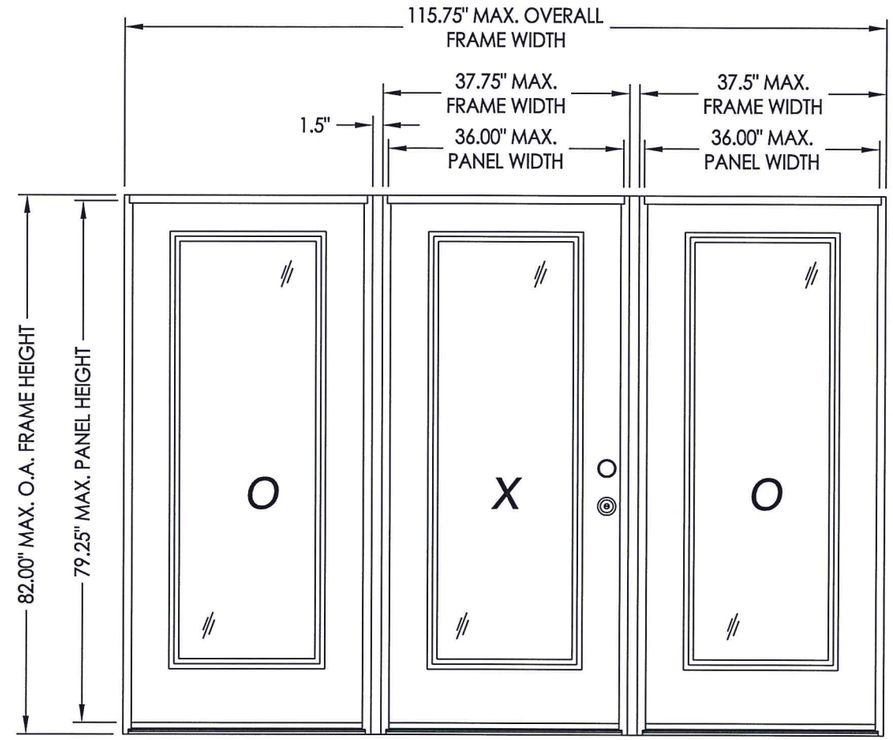

"SMOOTH STAR", "FIBER CLASSIC"
"CLASSIC CRAFT" & "CLASSIC CRAFT RUSTIC"

SWING	OVERALL FRAME DIMENSION	OVERALL D.L.O. DOOR / SIDELITE DIMENSION	DESIGN PRESSURE (PSF)	
			POSITIVE	NEGATIVE
INSWING	115.75" X 82.00"	21.00" X 63.25"	+47.0	−53.0
OUTSWING	115.75" X 80.62"	21.00" X 63.25"	+50.0	−50.0

STATE OF TEXAS
LYNDON F. SCHMIDT
104123
LICENSED PROFESSIONAL ENGINEER

Documents Prepared By: Lyndon F. Schmidt, P.E.
TEXAS P.E. #104123
RW BUILDING CONSULTANTS, INC.
P.O. Box 230 Valrico FL. 33595
Phone No.: 813.659.9197
TEXAS BOARD OF PROFESSIONAL ENGINEERS
CERTIFICATE OF REGISTRATION # F-11852

PRODUCT: THERMA-TRU GLAZED FIBERGLASS DOOR W/ SIDELITES IN/OUTSWING "IMPACT"
PART OR ASSEMBLY: TYPICAL ELEVATION, DESIGN PRESSURES & GENERAL NOTES

NO.	DATE	REVISIONS	BY
1	7/22/15	ADDED GENERAL NOTE 5.	LFS

DATE: 7/17/12
SCALE: N.T.S.
DWG. BY: JK
CHK. BY: LFS
DRAWING NO.: TX-4192
SHEET 1 OF 9

© 2012 R.W. BUILDING CONSULTANTS INC.

R:\Clients\Therma Tru PERMANENT\B - Texas Dept of Ins\TDI - DR 330 - 68 Glazed FG Imp IS - OS Sgls Dbls w-wo Imp SLIC - Drawings\Current\TX-4190-94.dwg, TX-4192

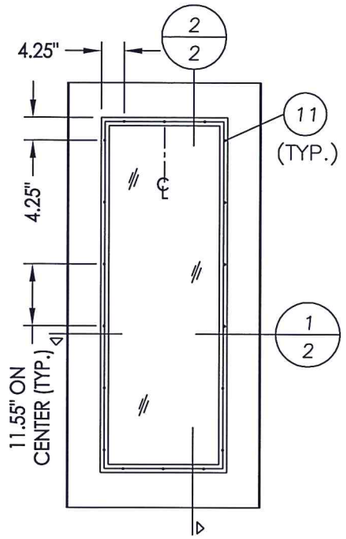

SIDELITE PANEL

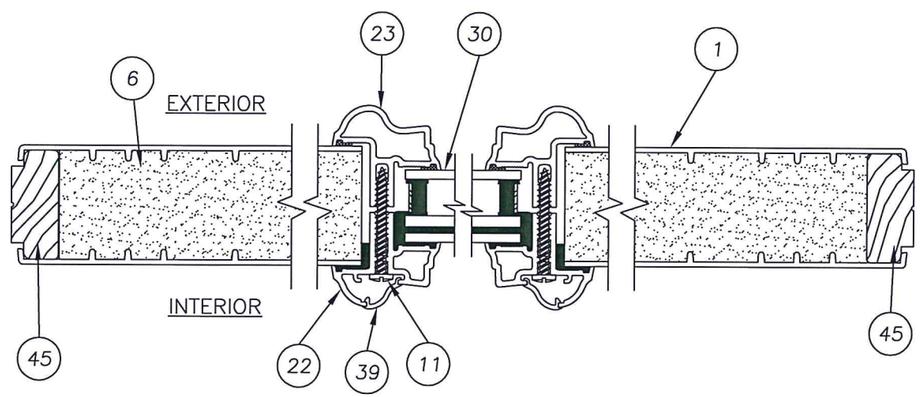

1/2 HORIZONTAL CROSS SECTION
SIDELITE PANEL

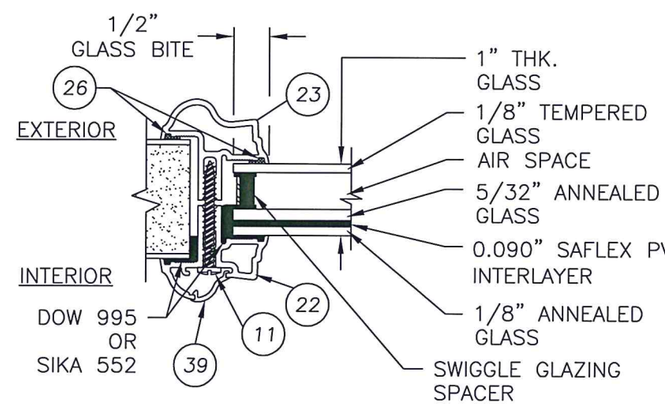

GLAZING DETAIL

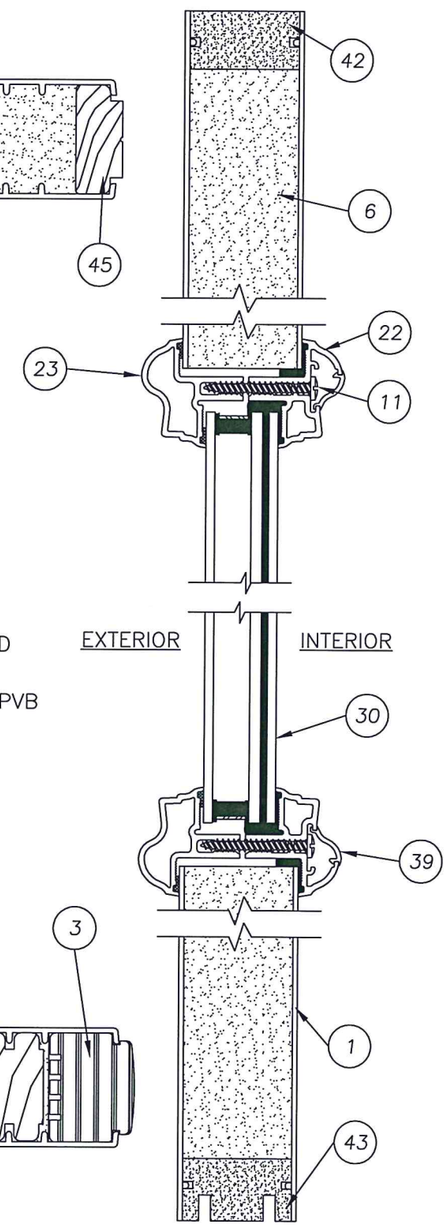

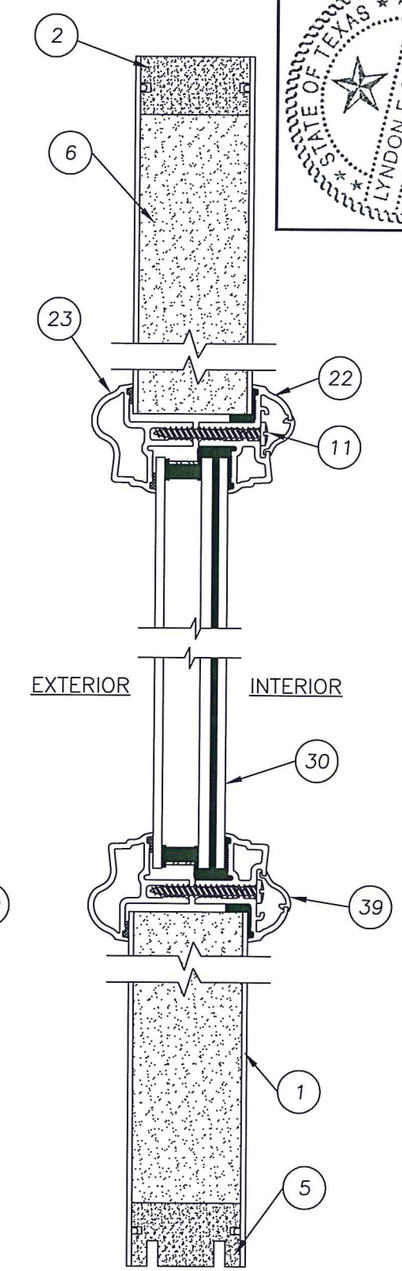

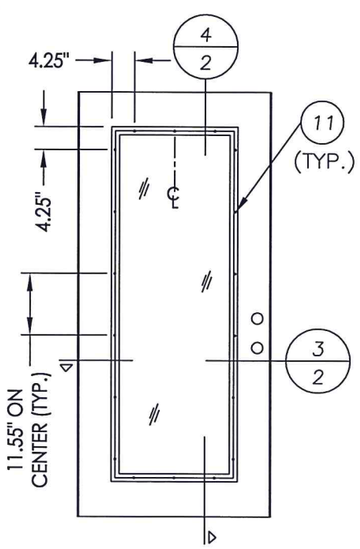

DOOR PANEL

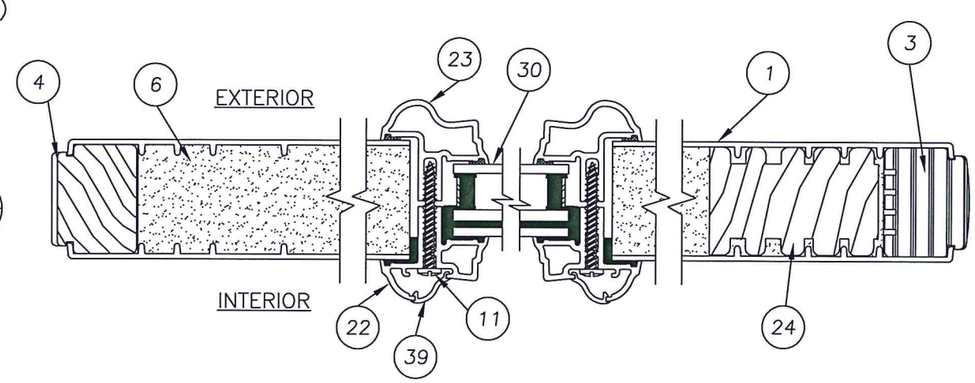

3/2 HORIZONTAL CROSS SECTION
DOOR PANEL

2/2 VERTICAL CROSS SECTION
SIDELITE PANEL

4/2 VERTICAL CROSS SECTION
DOOR PANEL

STATE OF TEXAS
LYNDON F. SCHMIDT
104123
LICENSED
PROFESSIONAL ENGINEER
7.22.15

Documents Prepared By: Lyndon F. Schmidt, P.E.
TEXAS P.E. #104123

RW BUILDING CONSULTANTS, INC.
P.O. Box 230 Valrico FL. 33595
Phone No.: 813.659.9197

TEXAS BOARD OF PROFESSIONAL ENGINEERS
CERTIFICATE OF REGISTRATION # F-11852

PRODUCT: THERMA-TRU GLAZED FIBERGLASS DOOR W/ SIDELITE IN/OUTSWING "IMPACT"

PART OR ASSEMBLY: "SMOOTH STAR" DOOR/SIDELITE PANEL DETAILS

NO.	DATE	REVISIONS	BY
1	7/22/15	ADDED GENERAL NOTE 5.	LFS

DATE: 7/17/12
SCALE: N.T.S.
DWG. BY: JK
CHK. BY: LFS
DRAWING NO.: TX-4192
SHEET 2 OF 9

© 2012 R.W. BUILDING CONSULTANTS INC.

R:\Clients\Therma Tru PERMANENT\B - Texas Dept of Ins\TDI - DR 330 - 68 Glazed FG Imp IS - OS Sgls Dbls w-wo Imp SLVC - Drawings\Current\TX-4190-94.dwg, 2.2

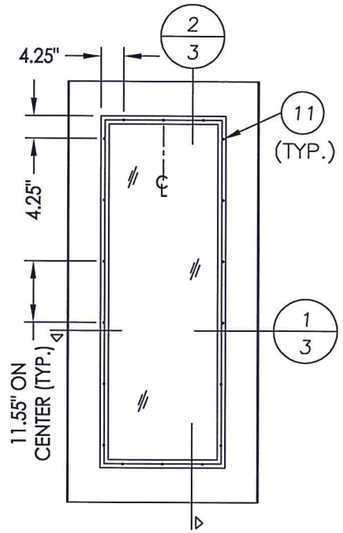

SIDELITE PANEL

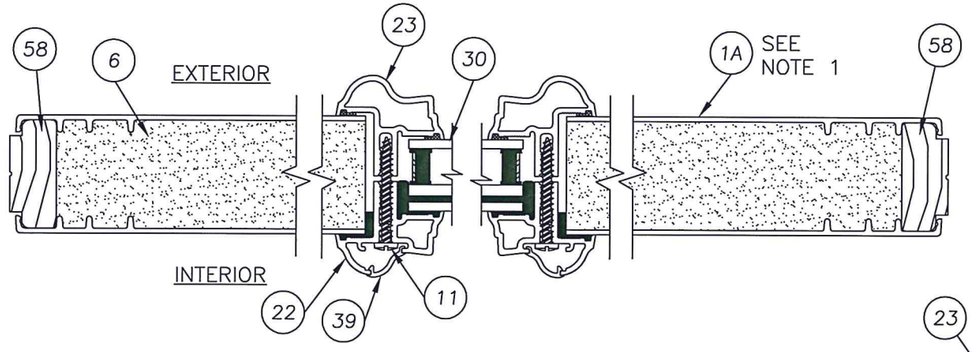

1/3 HORIZONTAL CROSS SECTION
SIDELITE PANEL

NOTE:

1. "RUSTIC" PANEL UTILIZES MAHOGANY GRAINING PATTERN, "CLASSIC CRAFT" PANEL UTILIZES OAK GRAINING PATTERN.

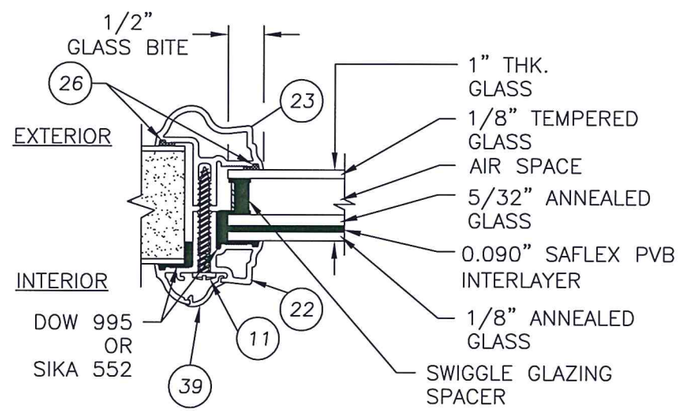

GLAZING DETAIL

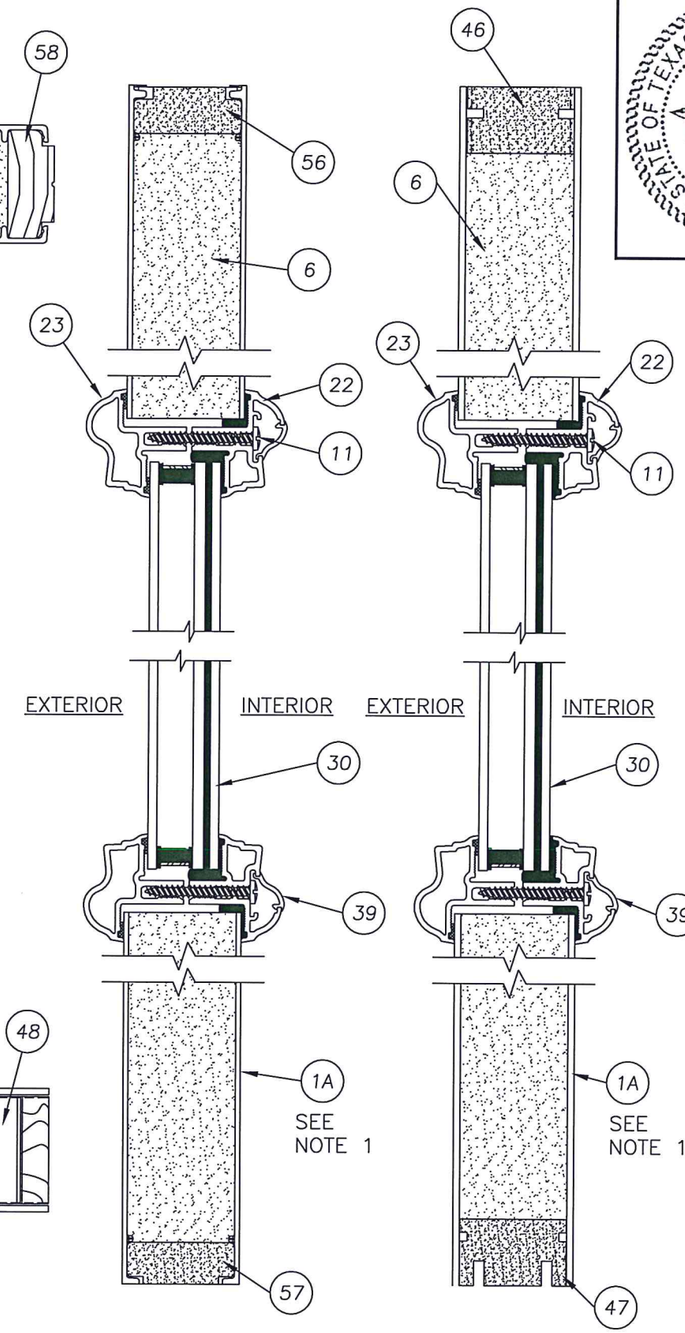

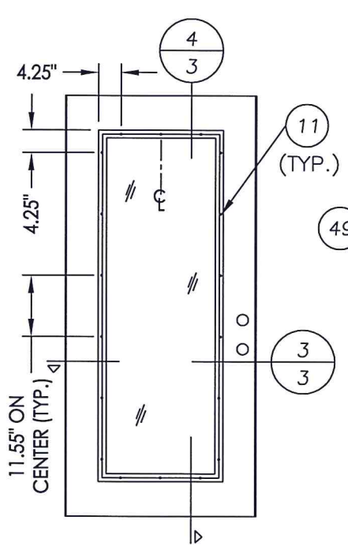

DOOR PANEL

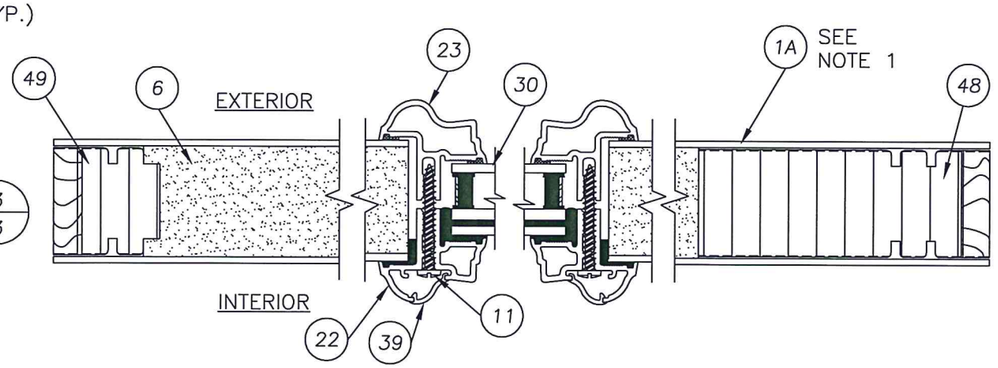

3/3 HORIZONTAL CROSS SECTION
DOOR PANEL

2/3 VERTICAL CROSS SECTION
SIDELITE PANEL

4/3 VERTICAL CROSS SECTION
DOOR PANEL

STATE OF TEXAS
LYNDON F. SCHMIDT
104123
LICENSED
PROFESSIONAL ENGINEER

Documents Prepared By: Lyndon F. Schmidt, P.E.
TEXAS P.E. #104123

RW BUILDING CONSULTANTS, INC.
P.O. Box 230 Valrico FL. 33595
Phone No.: 813.659.9197

TEXAS BOARD OF PROFESSIONAL ENGINEERS
CERTIFICATE OF REGISTRATION # F-11852

PRODUCT: THERMA-TRU GLAZED FIBERGLASS DOOR W/ SIDELITE IN/OUTSWING "IMPACT"

PART OR ASSEMBLY: "CLASSIC CRAFT" & "C.C. RUSTIC" DOOR/SIDELITE PANEL DETAILS

REVISIONS

NO.	DATE		BY
1	7/22/15	ADDED GENERAL NOTE 5.	LFS

DATE: 7/17/12
SCALE: N.T.S.
DWG. BY: JK
CHK. BY: LFS
DRAWING NO.: TX-4192
SHEET 3 OF 9

© 2012 R.W. BUILDING CONSULTANTS INC.

R:\Clients\Therma Tru PERMANENT\B - Texas Dept of Ins\TDI - DR 330 - 68 Glazed FG Imp IS - OS Sgls Dbls w-wo Imp SL\C - Drawings\Current\TX-4190-94.dwg, 3.2

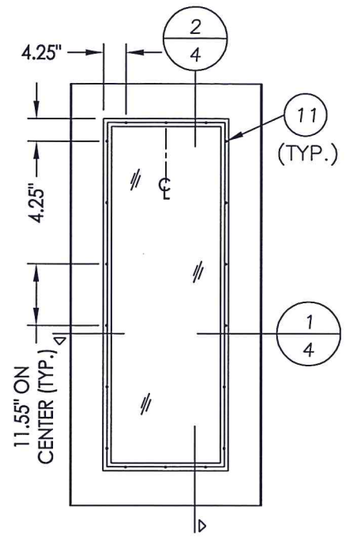

SIDELITE PANEL

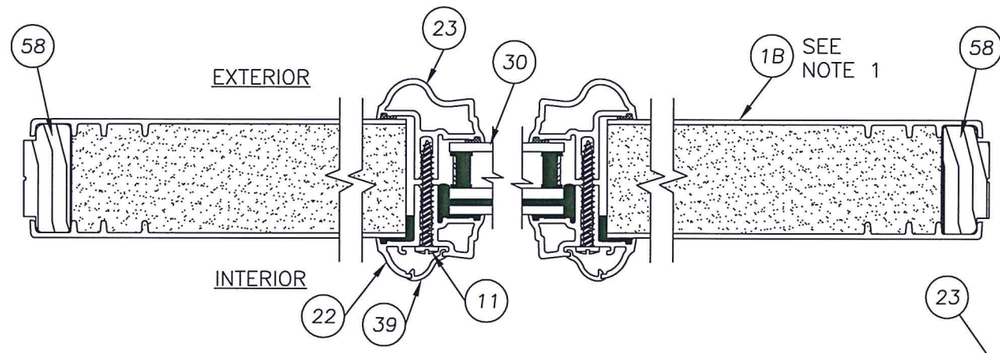

1/4 HORIZONTAL CROSS SECTION
SIDELITE PANEL

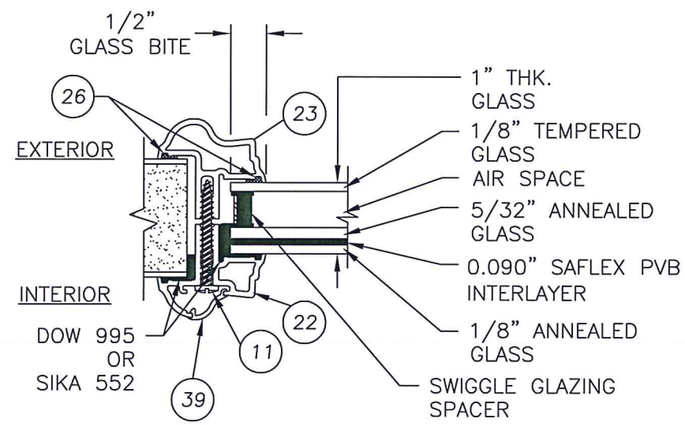

GLAZING DETAIL

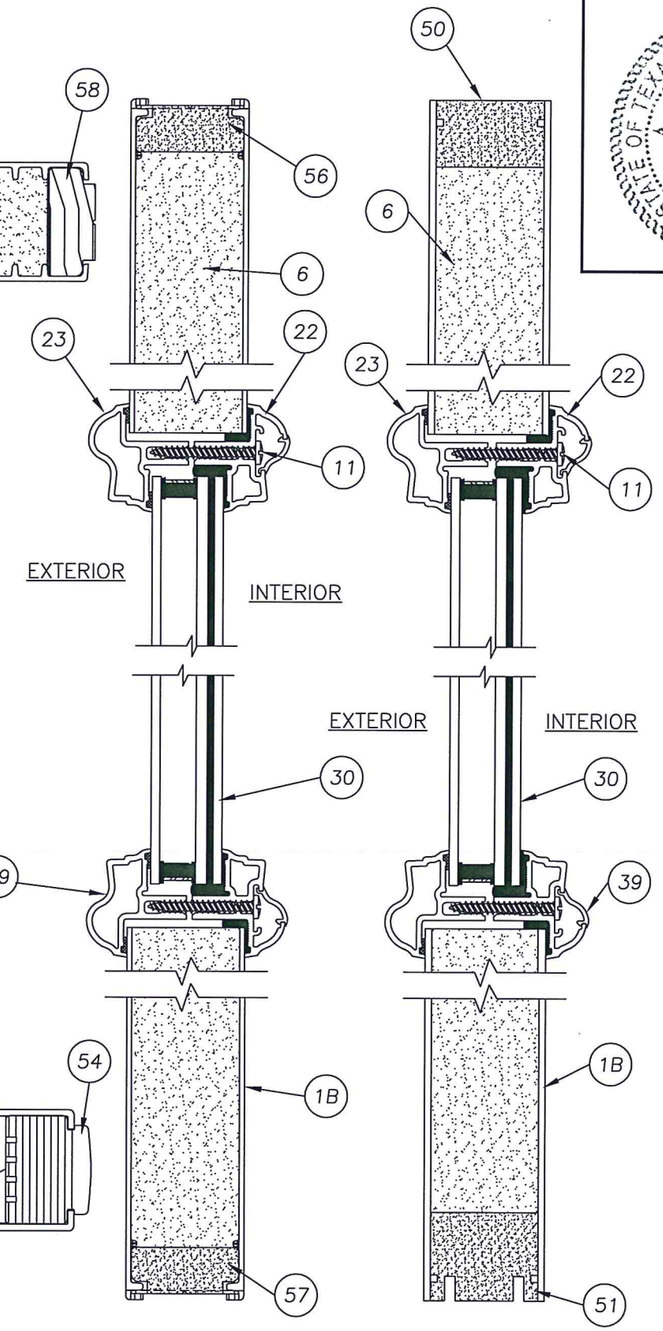

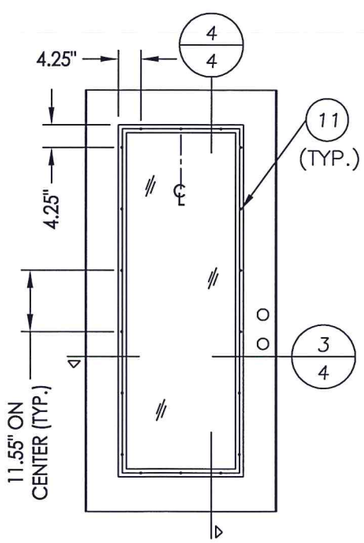

DOOR PANEL

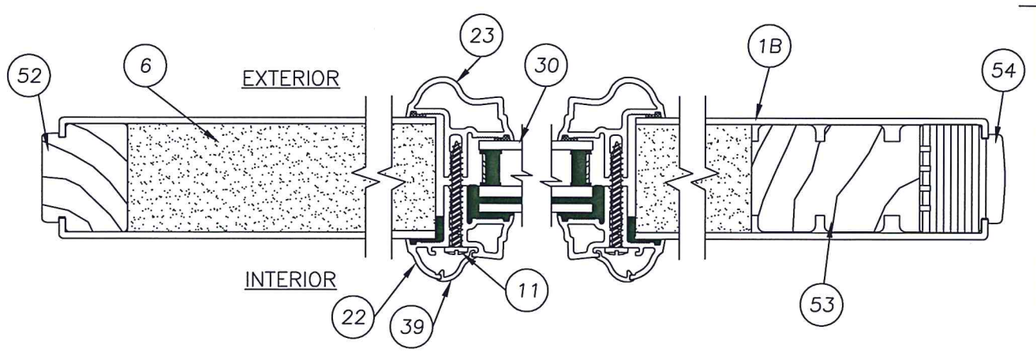

3/4 HORIZONTAL CROSS SECTION
DOOR PANEL

2/4 VERTICAL CROSS SECTION
SIDELITE PANEL

4/4 VERTICAL CROSS SECTION
DOOR PANEL

STATE OF TEXAS
LYNDON F. SCHMIDT
104123
LICENSED
PROFESSIONAL ENGINEER
7-22-15

Documents Prepared By: Lyndon F. Schmidt, P.E.
TEXAS P.E. #104123

RW BUILDING CONSULTANTS, INC.
P.O. Box 230 Valrico FL. 33595
Phone No.: 813.659.9197

TEXAS BOARD OF PROFESSIONAL ENGINEERS
CERTIFICATE OF REGISTRATION # F-11852

PRODUCT: THERMA-TRU GLAZED FIBERGLASS DOOR W/ SIDELITE IN/OUTSWING "IMPACT"

PART OR ASSEMBLY: "FIBER CLASSIC" DOOR/SIDELITE PANEL DETAILS

NO.	DATE	REVISIONS	BY
1	7/22/15	ADDED GENERAL NOTE 5.	LFS

DATE: 7/17/12
SCALE: N.T.S.
DWG. BY: JK
CHK. BY: LFS
DRAWING NO.: TX-4192
SHEET 4 OF 9

© 2012 R.W. BUILDING CONSULTANTS INC.

R:\Clients\Therma Tru PERMANENT\B - Texas Dept of Ins\TDI - DR 330 - 68 Glazed FG Imp IS - OS Sgls Dbls w-wo Imp SL\C - Drawings\Current\TX-4190-94.dwg, 4.2

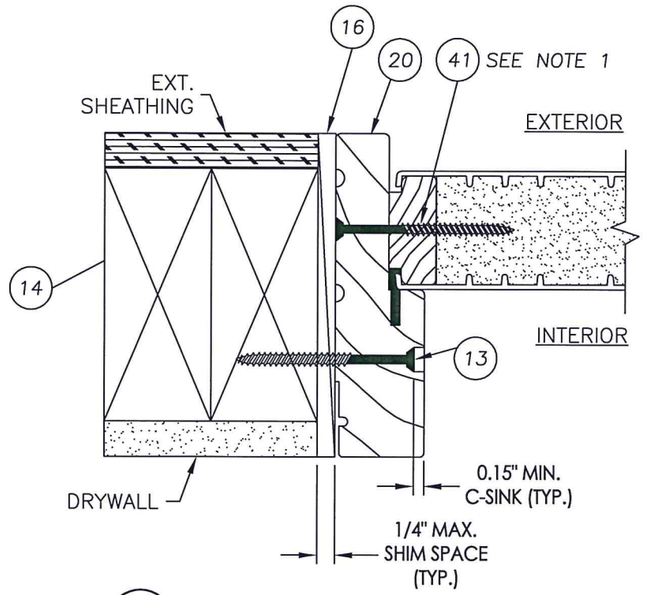

1/5 HORIZONTAL CROSS SECTION
OUTSWING SHOWN (INSWING ALSO APPROVED)
("Smooth Star Series" shown)

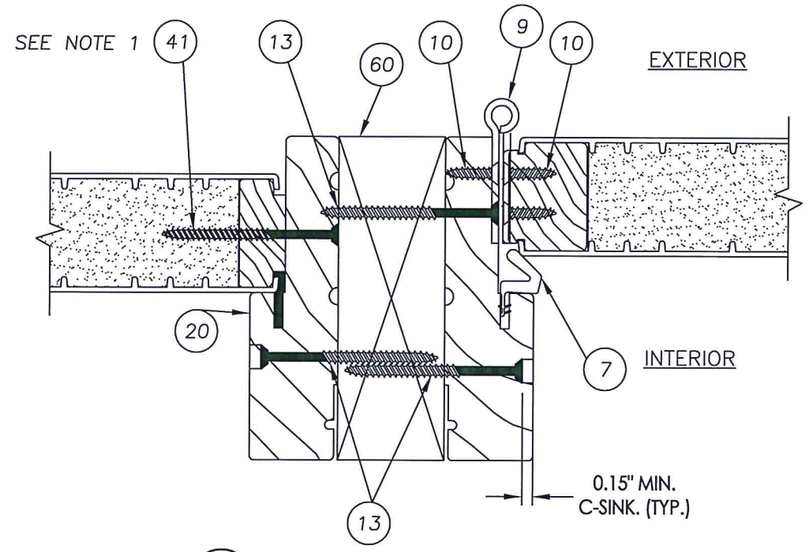

2/5 HORIZONTAL CROSS SECTION
OUTSWING SHOWN (INSWING ALSO APPROVED)
("Smooth Star Series" shown)

NOTE:
1. SIDELITE ASSEMBLY FASTENERS LOCATED 6" FROM ENDS PLUS 4 MORE EQUALLY SPACED (6 TOTAL).

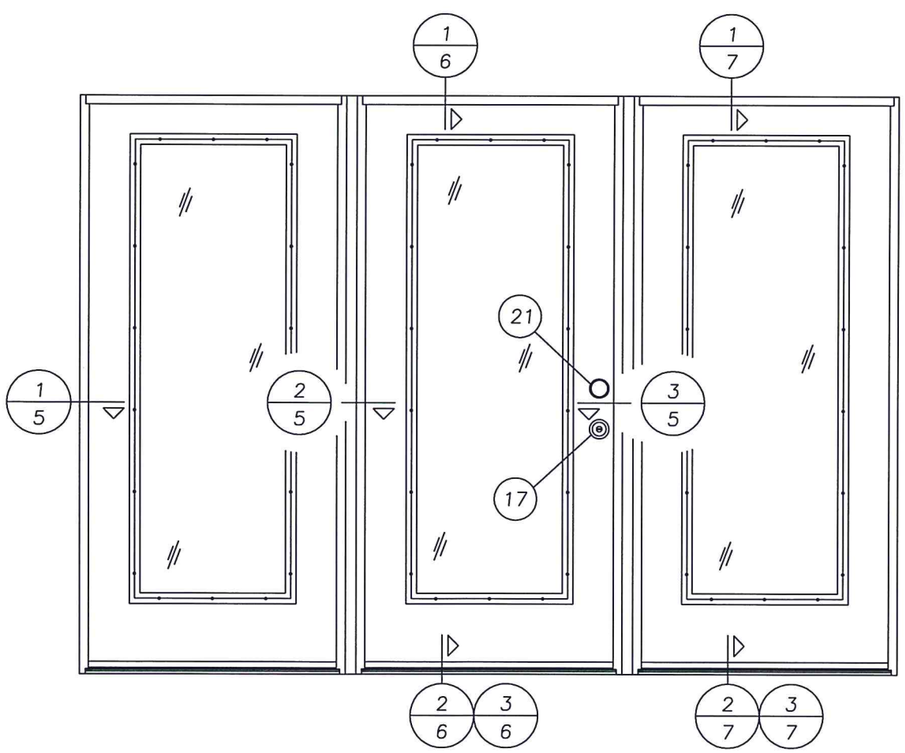

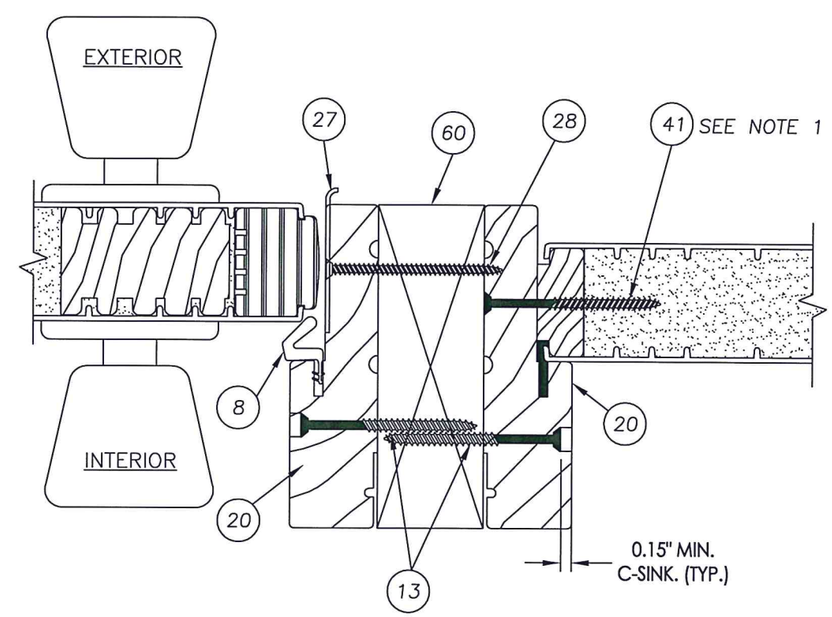

3/5 HORIZONTAL CROSS SECTION
OUTSWING SHOWN (INSWING ALSO APPROVED)
("Smooth Star Series" shown)

STATE OF TEXAS
LYNDON F. SCHMIDT
104123
LICENSED PROFESSIONAL ENGINEER
7.22.12

Documents Prepared By: Lyndon F. Schmidt, P.E.
TEXAS P.E. #104123

RW BUILDING CONSULTANTS, INC.
P.O. Box 230 Valrico FL 33595
Phone No.: 813.659.9197

TEXAS BOARD OF PROFESSIONAL ENGINEERS
CERTIFICATE OF REGISTRATION # F-11852

PRODUCT: THERMA-TRU GLAZED FIBERGLASS DOOR S/SIDELITES IN/OUTSWING "IMPACT"

PART OR ASSEMBLY: HORIZONTAL CROSS SECTIONS

NO.	DATE	REVISIONS	BY
1	7/22/15	ADDED GENERAL NOTE 5.	LFS

DATE: 7/17/12
SCALE: N.T.S.
DWG. BY: JK
CHK. BY: LFS
DRAWING NO.: TX-4192
SHEET 5 OF 9

© 2012 R.W. BUILDING CONSULTANTS INC.

R:\Clients\Therma Tru PERMANENT\B - Texas Dept of Ins\TDI - DR 330 - 68 Glazed FG Imp IS - OS Sgls Dbls w-wo Imp SL\C - Drawings\Current\TX-4190-94.dwg, 5.2

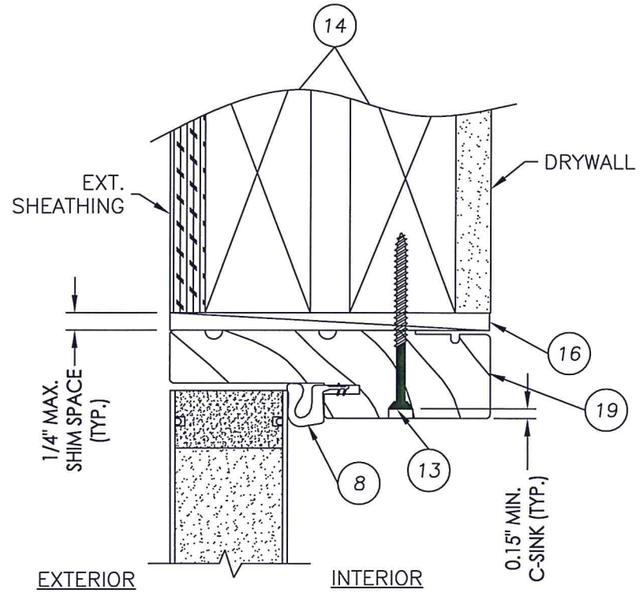

1/6 VERTICAL CROSS SECTION
OUTSWING SHOWN (INSWING ALSO APPROVED)
("SMOOTH STAR SERIES" SHOWN)

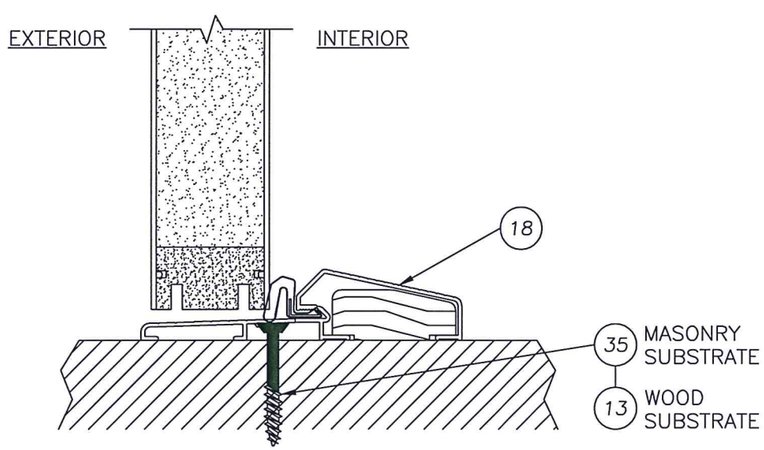

2/6 VERTICAL CROSS SECTION
OUTSWING CONFIGURATION
("SMOOTH STAR SERIES" SHOWN)

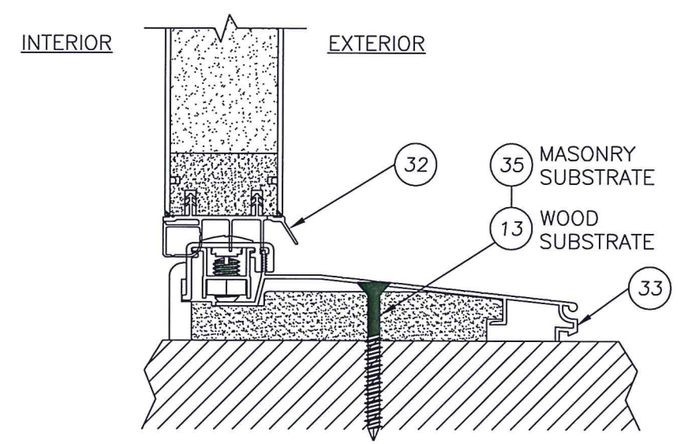

3/6 VERTICAL CROSS SECTION
INSWING CONFIGURATION
("SMOOTH STAR SERIES" SHOWN)

STATE OF TEXAS
LYNDON F. SCHMIDT
104123
LICENSED
PROFESSIONAL ENGINEER
7.22.15

Documents Prepared By: Lyndon F. Schmidt, P.E.
TEXAS P.E. #104123

RW BUILDING CONSULTANTS, INC.
P.O. Box 230 Valrico FL. 33595
Phone No.: 813.659.9197

TEXAS BOARD OF PROFESSIONAL ENGINEERS
CERTIFICATE OF REGISTRATION # F-11852

PRODUCT: THERMA-TRU GLAZED FIBERGLASS DOOR W/ SIDELITES IN/OUTSWING "IMPACT"

PART OR ASSEMBLY: VERTICAL CROSS SECTIONS

REVISIONS

NO.	DATE		BY
1	7/22/15	ADDED GENERAL NOTE 5.	LFS

DATE: 7/17/12
SCALE: N.T.S.
DWG. BY: JK
CHK. BY: LFS
DRAWING NO.: TX-4192
SHEET 6 OF 9

© 2012 R.W. BUILDING CONSULTANTS INC.

R:\Clients\Therma Tru PERMANENT\B - Texas Dept of Ins\TDI - DR 330 - 68 Glazed FG Imp IS - OS Sgls Dbls w-wo Imp SL\C - Drawings\Current\TX-4190-94.dwg, 6.2

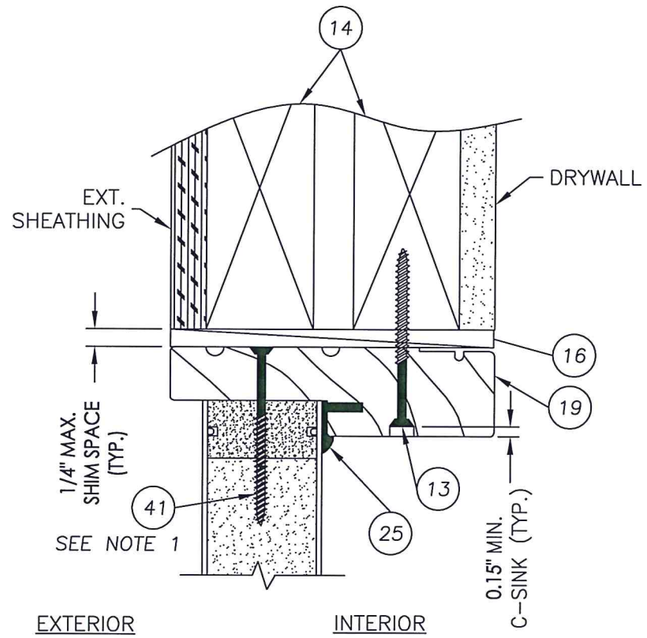

1/7 VERTICAL CROSS SECTION
OUTSWING SHOWN (INSWING ALSO APPROVED)
("SMOOTH STAR SERIES" SHOWN)

NOTE:
1. SIDELITE ASSEMBLY FASTENERS LOCATED 6" FROM ENDS PLUS 1 AT CENTERLINE (3 TOTAL).

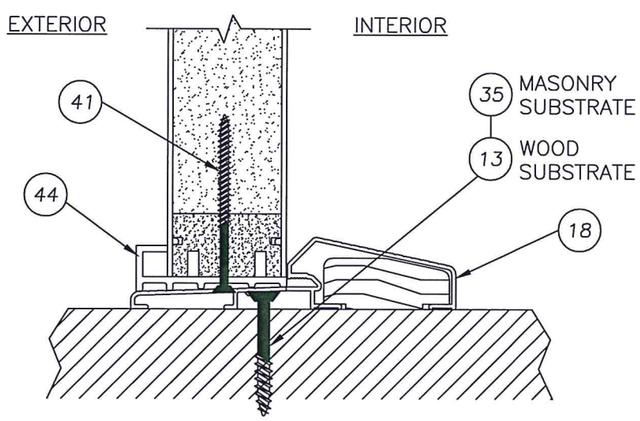

2/7 VERTICAL CROSS SECTION
OUTSWING CONFIGURATION
("SMOOTH STAR SERIES" SHOWN)

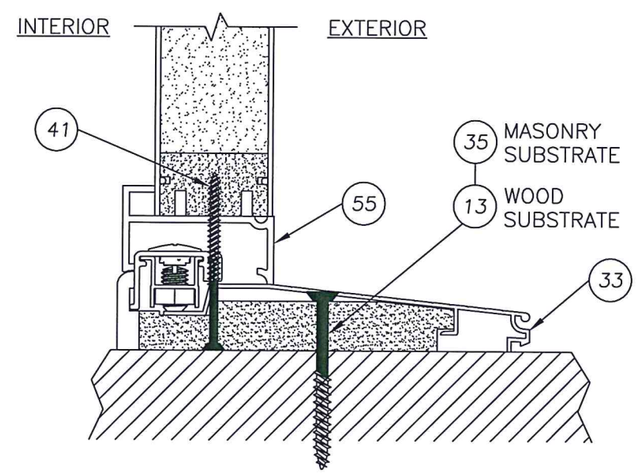

3/7 VERTICAL CROSS SECTION
INSWING CONFIGURATION
("SMOOTH STAR SERIES" SHOWN)

STATE OF TEXAS
LYNDON F. SCHMIDT
104123
LICENSED PROFESSIONAL ENGINEER
7-22-15

Documents Prepared By: Lyndon F. Schmidt, P.E.
TEXAS P.E. #104123
R.W. BUILDING CONSULTANTS, INC.
P.O. Box 230 Valrico FL. 33595
Phone No.: 813.659.9197
TEXAS BOARD OF PROFESSIONAL ENGINEERS
CERTIFICATE OF REGISTRATION # F-11852

PRODUCT: THERMA-TRU GLAZED FIBERGLASS DOOR W/ SIDELITES IN/OUTSWING "IMPACT"

PART OR ASSEMBLY: VERTICAL CROSS SECTIONS

NO.	DATE	REVISIONS	BY
1	7/22/15	ADDED GENERAL NOTE 5.	LFS

DATE: 7/17/12
SCALE: N.T.S.
DWG. BY: JK
CHK. BY: LFS
DRAWING NO.: TX-4192
SHEET 7 OF 9

© 2012 R.W. BUILDING CONSULTANTS INC.

R:\Clients\Therma Tru PERMANENT\B - Texas Dept of Ins\TDI - DR 330 - 68 Glazed FG Imp IS - OS Sgls Dbls w-wo Imp SLIC - Drawings\Current\TX-4190-94.dwg, 7.2

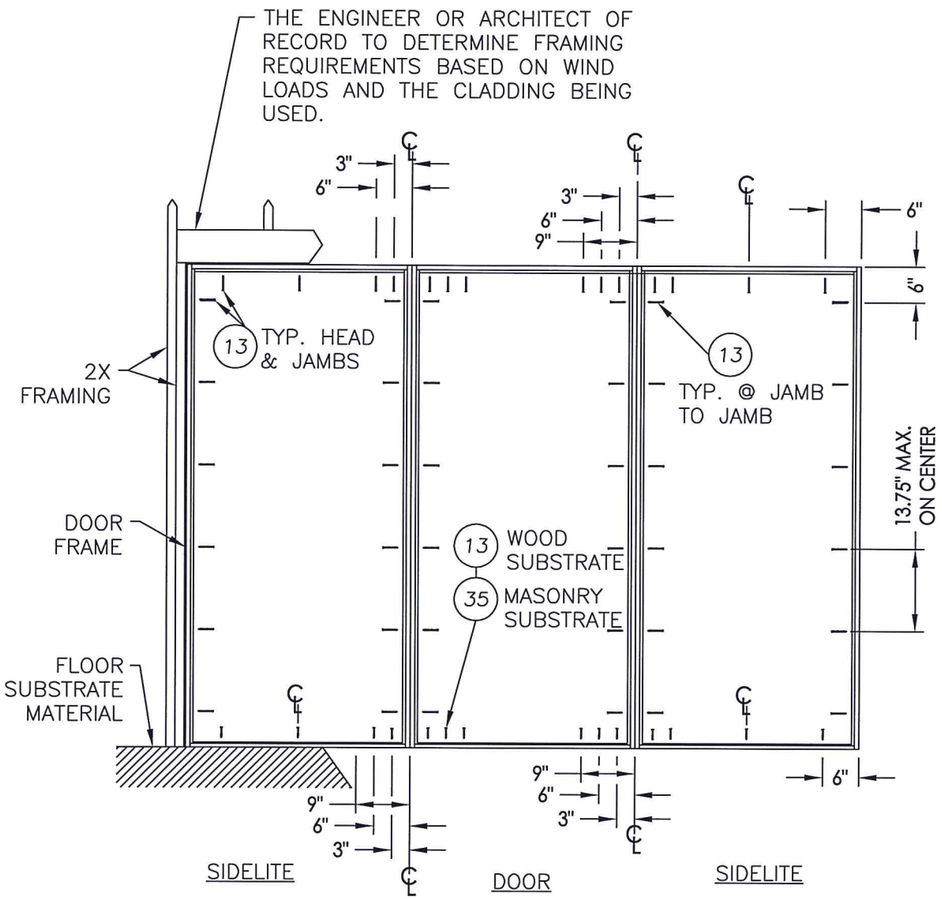

FRAME ANCHORING
FOR UP TO 36" SIDELITE

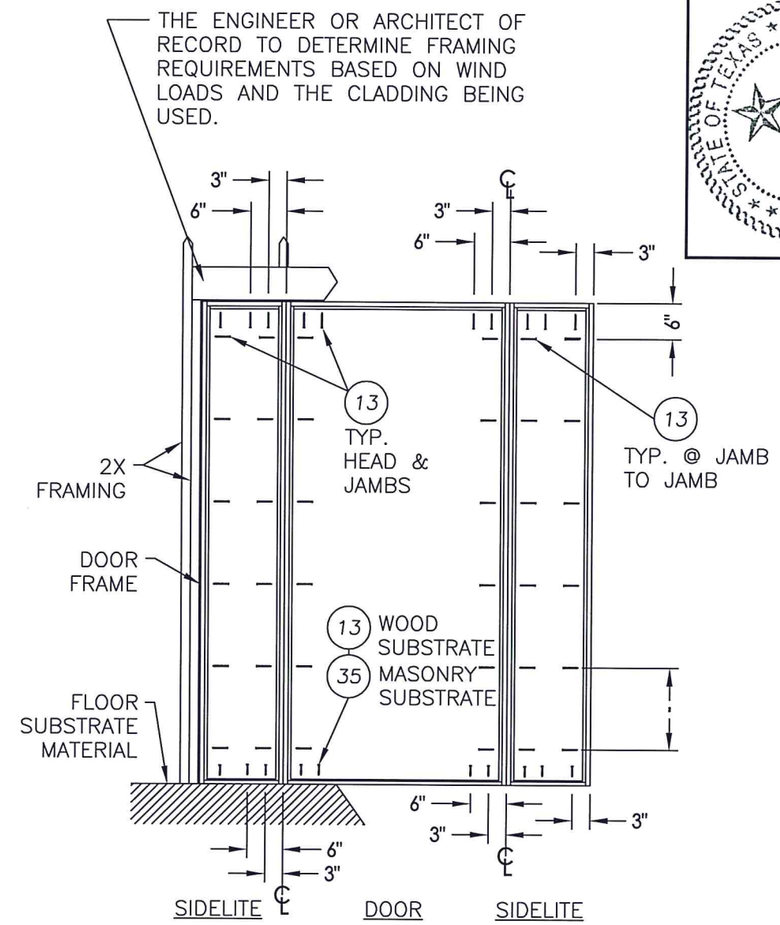

FRAME ANCHORING
FOR UP TO 14" SIDELITE

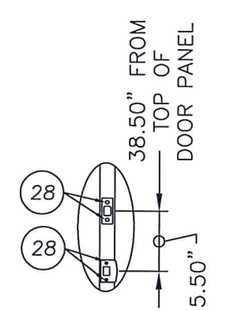

LATCH & DEADBOLT
STRIKE PLATE DETAIL

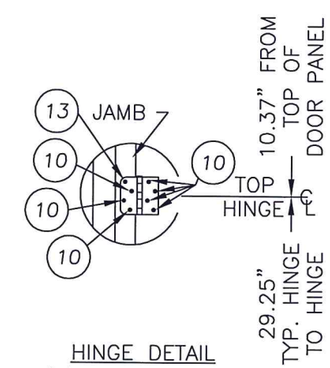

HINGE DETAIL
(3) HINGES TOTAL

CONCRETE ANCHOR NOTES:

1. *Concrete anchor locations at the corners may be adjusted to maintain the min. edge distance to mortar joints.*
2. *Concrete anchor locations noted as "MAX. ON CENTER" must be adjusted to maintain the min. edge distance to mortar joints, additional concrete anchors may be required to ensure the "MAX. ON CENTER" dimension are not exceeded.*
3. *Concrete anchor table:*

ANCHOR TYPE	ANCHOR SIZE	MIN. EMBEDMENT	MIN. CLEARANCE TO MASONRY EDGE	MIN. CLEARANCE TO ADJACENT ANCHOR
ITW TAPCON®	1/4"	1-3/4"	2-1/2"	3"
ELCO ULTRACON®	1/4"	1-3/4"	1"	3"

STATE OF TEXAS
LYNDON F. SCHMIDT
104123
LICENSED PROFESSIONAL ENGINEER
7.22.15

Documents Prepared By: Lyndon F. Schmidt, P.E.
TEXAS P.E. #104123
R.W. BUILDING CONSULTANTS, INC.
P.O. Box 230 Valrico FL. 33595
Phone No.: 813.659.9197
TEXAS BOARD OF PROFESSIONAL ENGINEERS
CERTIFICATE OF REGISTRATION # F-11852

PRODUCT: THERMA-TRU GLAZED FIBERGLASS DOOR W/ SIDELITES IN/OUTSWING "IMPACT"
PART OR ASSEMBLY: FRAME ANCHORING

REVISIONS

NO.	DATE		BY
1	7/22/15	ADDED GENERAL NOTE 5.	LFS

DATE: 7/17/12
SCALE: N.T.S.
DWG. BY: JK
CHK. BY: LFS
DRAWING NO.: TX-4192
SHEET 8 OF 9

© 2012 R.W. BUILDING CONSULTANTS INC.

R:\Clients\Therma Tru PERMANENT\B - Texas Dept of Ins\TDI - DR 330 - 68 Glazed FG Imp IS - OS Sgls Dbls w-wo Imp SL\C - Drawings\Current\TX-4190-94.dwg, 8.2

Item	DESCRIPTION	Material
1	DOOR SKIN; SMOOTH STAR SERIES (.065" MIN.)	FIBERGLASS
1A	DOOR SKIN; CLASSIC CRAFT SERIES & RUSTIC (.090" MIN.)	FIBERGLASS
1B	DOOR SKIN; FIBER CLASSIC SERIES (.065" MIN.)	FIBERGLASS
2	TOP RAIL DOOR THERMA-TRU (SMOOTH STAR)	COMP.
3	LATCH STILE DOOR THERMA-TRU (SMOOTH STAR)	LVL
4	HINGE STILE DOOR THERMA-TRU (SMOOTH STAR)	WOOD
5	BOTTOM RAIL DOOR THERMA-TRU (SMOOTH STAR)	COMP.
6	POLYURETHANE FOAM	FOAM
7	MEDIUM REACH COMPRESSION WEATHER-STRIP (THERMA-TRU)	FOAM
8	LONG REACH COMPRESSION WEATHER-STRIP (THERMA-TRU)	FOAM
9	4" x 4" HINGE .097" THK. (THERMA-TRU)	STEEL
10	#10 x 3/4" PFH WOOD SCREW (Hinge to Frame)	STEEL
11	#10 x 1-1/2" PPH SHEET METAL SCREW	STEEL
12	#10 x 2" PFH WOOD SCREW	STEEL
13	#10 x 2-1/2" PFH WOOD SCREW	STEEL
14	2X FRAMING (G >= 0.42)	WOOD
16	MAX. 1/4" SHIM MATERIAL	WOOD
17	LOCK - KWIKSET 200 SERIES	STEEL
18	THRESHOLD OUTSWING (THERMA-TRU)	ALUM./WOOD
19	HEADER JAMB (4.656" x 1.25" THERMA-TRU, PINE)	WOOD
20	SIDE JAMB (4.656" x 1.25" THERMA-TRU) (FJ PINE)	WOOD
21	DEADBOLT - KWIKSET 600 SERIES	STEEL
22	INTERIOR LITE FRAME	ALUM.
23	EXTERIOR LITE FRAME	ALUM.
24	LOCK BLOCK (SMOOTH STAR)	WOOD
25	SILICONE CAULK	SILICONE
26	CELLULAR GLAZING TAPE	FOAM
27	LATCH STRIKE	STEEL
28	#8 x 2-1/2" PFH WOOD SCREW	STEEL
29	#8 x 3" PFH SCREW	STEEL
30	1" THK. INSUL. LAMINATED GLASS (PVB INTERLAYER BY SOLUTIA) 1/8" TEMP.-AIR- 5/32" ANN./.090" PVB INTERLAYER/1/8" ANN.	GLASS
32	DOOR BOTTOM SWEEP (INSWING)	PVC
33	INSWING THRESHOLD	ALUM./COMP.
35	1/4" ELCO OR ITW CONCRETE SCREW (1-3/4" MIN. EMB.)	STEEL
39	LITE FRAME TRIM	PVC
40	#9 x 3" PFH WOOD SCREW	STEEL
41	#9 x 2-1/2" PFH SCREW	STEEL
42	SIDELITE TOP RAIL (SMOOTH STAR)	COMP.
43	SIDELITE BOTTOM RAIL (SMOOTH STAR)	COMP.
44	OUTSWING SIDELITE SPACER	PVC
45	SIDELITE STILE (SMOOTH STAR)	WOOD
46	TOP RAIL (CLASSIC CRAFT & RUSTIC)	COMP.
47	BOTTOM RAIL (CLASSIC CRAFT & RUSTIC)	COMP.
48	LATCH SIDE STILE (CLASSIC CRAFT & RUSTIC)	LSL / OAK
49	HINGE SIDE STILE (CLASSIC CRAFT & RUSTIC)	LSL / OAK
50	TOP RAIL (FIBER CLASSIC)	COMP.
51	BOTTOM RAIL (FIBER CLASSIC)	COMP.
52	HINGE SIDE STILE (FIBER CLASSIC)	WOOD
53	LOCK BLOCK (FIBER CLASSIC)	WOOD
54	LATCH SIDE STILE (FIBER CLASSIC)	LVL / OAK
55	SIDELITE SPACER INSWING	COMP.
56	SIDELITE TOP & BOTTOM RAIL (CLASSIC CRAFT, RUSTIC & FIBER CLASSIC)	COMP.
57	SIDELITE BOTTOM RAIL (CLASSIC CRAFT, RUSTIC & FIBER CLASSIC)	WOOD
58	SIDELITE STILE (CLASSIC CRAFT, RUSTIC & FIBER CLASSIC)	PVC
60	2X MULLION (G >= 0.42)	WOOD

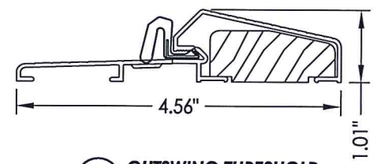

18 OUTSWING THRESHOLD

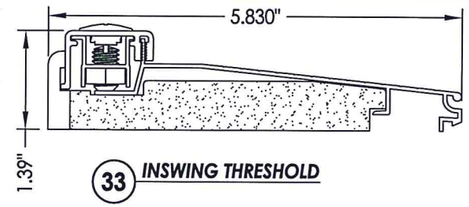

33 INSWING THRESHOLD

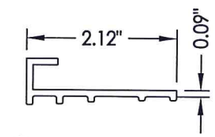

44 SIDELITE SPACER Outswing

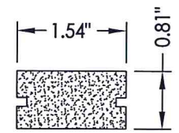

42 SIDELITE TOP RAIL (Smooth Star)

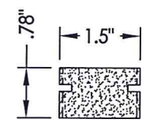

42 TOP RAIL (Classic craft & Rustic)

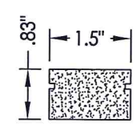

50 TOP RAIL (Fiber Classic)

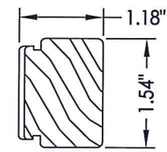

4 HINGE STILE (Smooth Star)

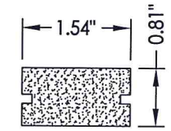

2 DOOR TOP RAIL (Smooth Star)

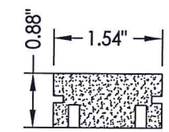

5 DOOR BOTTOM RAIL (Smooth Star)

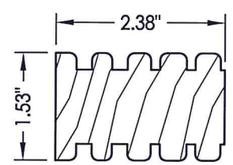

24 LOCK BLOCK (Smooth Star)

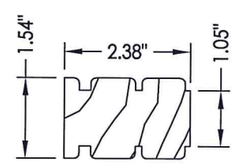

53 LOCK BLOCK (Fiber Classic)

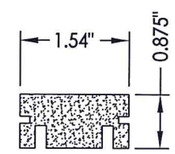

43 SIDELITE BOTTOM RAIL (Smooth Star)

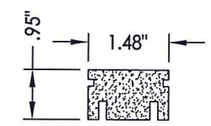

47 BOTTOM RAIL (Classic craft & Rustic)

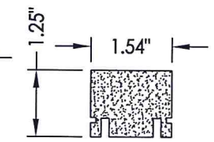

51 BOTTOM RAIL (Fiber Classic)

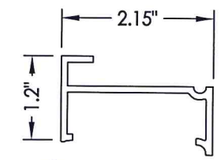

55 SIDELITE SPACER Inswing

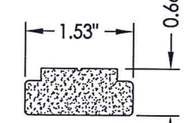

56 SIDELITE TOP & BOTTOM RAIL (Fiber Classic)

56 TOP RAIL (Classic Craft & Rustic)

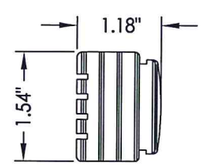

3 LATCH STILE (Smooth Star)

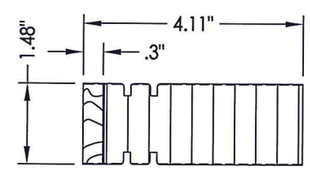

48 LATCH SIDE STILE (Classic Craft & Rustic)

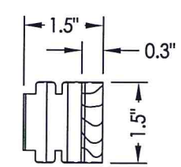

49 HINGE SIDE STILE (Classic Craft & Rustic)

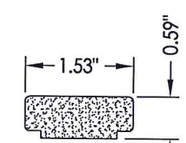

57 SIDELITE BOTTOM RAIL (Classic Craft, Rustic)

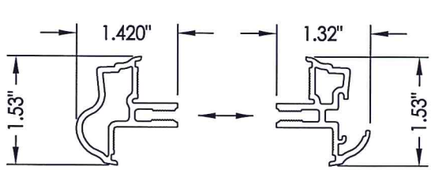

23 EXT. LITE FRAME

22 INT. LITE FRAME

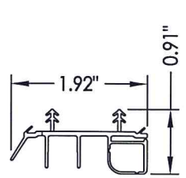

32 SWEEP

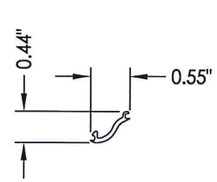

39 LITE FRAME TRIM

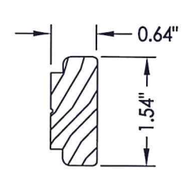

45 SIDELITE STILE (Smooth Star)

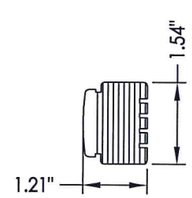

54 LATCH SIDE STILE (Fiber Classic)

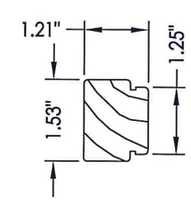

52 HINGE SIDE STILE (Fiber Classic)

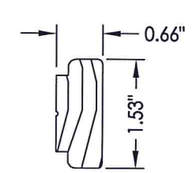

58 SIDELITE STILE (Classic Craft, Rustic & Fiber Classic)

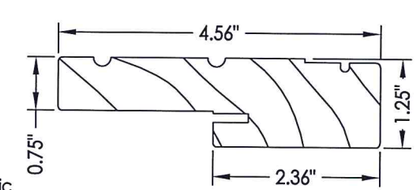

19 20 HEAD & SIDE Jamb

STATE OF TEXAS
LYNDON F. SCHMIDT
104123
LICENSED PROFESSIONAL ENGINEER
7.22.15

Documents Prepared By: Lyndon F. Schmidt, P.E.
TEXAS P.E. #104123

RW BUILDING CONSULTANTS, INC.
P.O. Box 230 Valrico FL. 33595
Phone No.: 813.659.9197

TEXAS BOARD OF PROFESSIONAL ENGINEERS
CERTIFICATE OF REGISTRATION # F-11852

PRODUCT: THERMA-TRU FIBERGLASS DOOR W/ GLAZED SIDELITE IN/OUTSWING "IMPACT"

PART OR ASSEMBLY: BILL OF MATERIALS & COMPONENTS

REVISIONS

NO.	DATE		BY
1	7/22/15	ADDED GENERAL NOTE 5.	LFS

DATE: 7/17/12
SCALE: N.T.S.
DWG. BY: JK
CHK. BY: LFS
DRAWING NO.: TX-4192
SHEET 9 OF 9

© 2012 R.W. BUILDING CONSULTANTS INC.

R:\Clients\Therma Tru PERMANENT\B - Texas Dept of Ins\TDI - DR 330 - 68 Glazed FG Imp IS - OS Sgls Dbls w-wo Imp SLIC - Drawings\Current\TX-4190-94.dwg, 9.2