Trinity Glass
INTERNATIONAL
4621 192nd STREET TACOMA, WA 98446

3'0 X 6'8
FLUSH-GLAZED FIBERGLASS SINGLE DOOR INSWING / OUTSWING
"NON-IMPACT"

EVALUATED FOR USE IN THE STATE OF TEXAS

The Trinity Flush-Glazed Premium Fiberglass Door described herein complies with the 2006 International Residential Code (IRC), Sections R301 & R613 and the 2006 International Building Code (IBC), Sections 1405.12, 1609, 1714.5, 2403 and 2404 (including Texas revisions) subject to the following conditions:

1. Anchors shall be as listed and spaced as shown in the details. Anchor embedment to base material shall be beyond wall dressing or stucco.
2. When used in areas requiring wind-borne debris protection this product is required to be protected with an impact resistant covering that complies with Section R301.2.1.2 of the IRC and Section 1609.1.2 of the IBC.
3. Allowable design pressure requirements must be equal to or less than the design pressure rating shown in the design pressure chart, sheet 1 of this drawing.
4. Conditions not covered by this drawing are subject to further engineering analysis.

SUPPORTING DOCUMENTS & EVIDENCE

1. Testing per ASTM E330-02 as performed by Testing Evaluation Laboratories Inc. and reported in test report numbers TEL 05-0411-7 and TEL 08-01370020, signed by Wendell W. Haney, P.E.
2. Calculations (Anchoring and Glass load resistance report ASTM E1300-04) prepared by Lyndon F. Schmidt, P.E.
3. Certificate of Participation issued by the National Accreditation and Management Institute, Inc., certifying that Trinity Glass Int'l is manufacturing products within a Quality Assurance program.

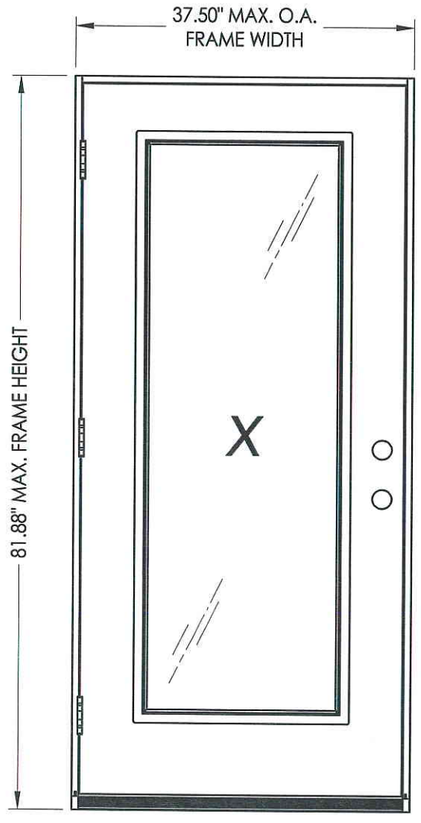

TABLE OF CONTENTS	
SHEET #	DESCRIPTION
1	Typical elevations, design pressures & general notes
2	Door panel construction details & glazing details
3	Horizontal cross sections
4	Vertical cross sections
5	Frame anchoring
6	Components
7	Bill of materials

SWING	MAX. FRAME DIMENSION	GLASS TYPE	DESIGN PRESSURE (PSF)	
			POSITIVE	NEGATIVE
INSWING	37.50" x 81.88"	G1, G2 & G3	+65.0	-65.0
OUTSWING	37.50" x 80.75"		+65.0	-65.0

Refer to Table (sheet 3) for Passage Lock Rating Limitations

STATE OF TEXAS
LYNDON F. SCHMIDT
104123
LICENSED
PROFESSIONAL ENGINEER
1-7-10

Documents Prepared By: Lyndon F. Schmidt, P.E.
TEXAS P.E. #104123
RW BUILDING CONSULTANTS, INC.
P.O. Box 230 Valrico FL. 33595
Phone No.: 813.659.9197
TEXAS BOARD OF PROFESSIONAL ENGINEERS
CERTIFICATE OF REGISTRATION # F-11852

PRODUCT: TRINITY GLASS INT'L 6'8 FLSUH-GLAZED

PART OR ASSEMBLY: TYPICAL ELEVATION, DESIGN PRESSURES & GENERAL NOTES

NO.	DATE	REVISIONS	BY
2	7/27/09	TDI PRODUCT EVALUATION UPDATE	AL
1	6/28/06	REVISED LOCKSET NOMENCLATURE	EW

DATE: 8/29/05
SCALE: N.T.S.
DWG. BY: WH
CHK. BY: LFS
DRAWING NO.: TX-600
SHEET 1 OF 7

© 2009 R.W. BUILDING CONSULTANTS INC.

R:\A - Projects\Project Folders\Proj 801 - 900\pf895\TX-600\TX-600.dwg, TX-600

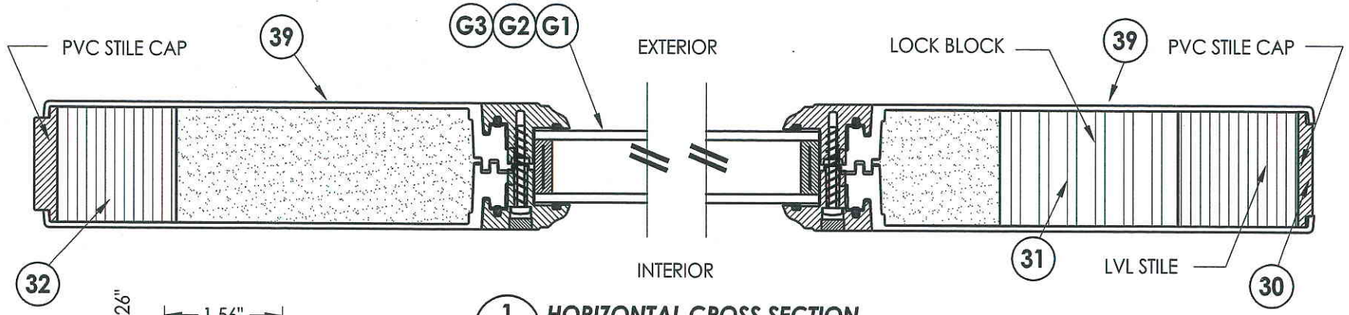

1/2 **HORIZONTAL CROSS SECTION**

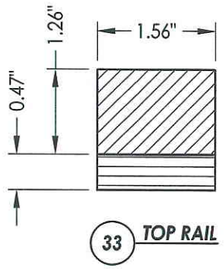

33 **TOP RAIL**

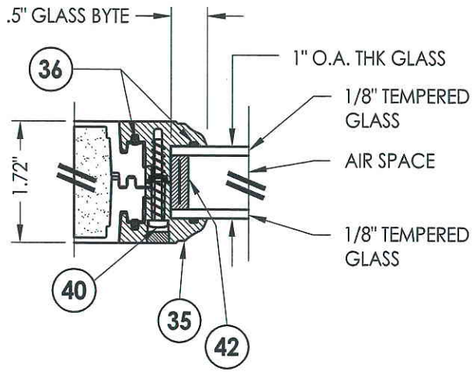

G1 **GLAZING DETAIL**

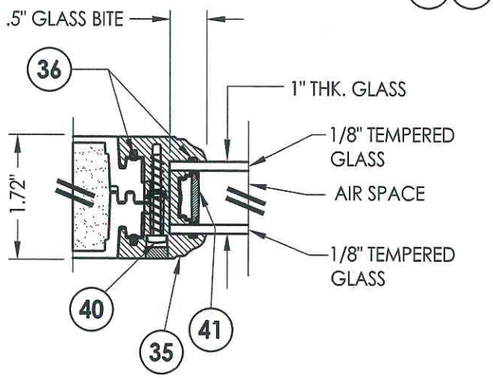

G2 **GLAZING DETAIL**

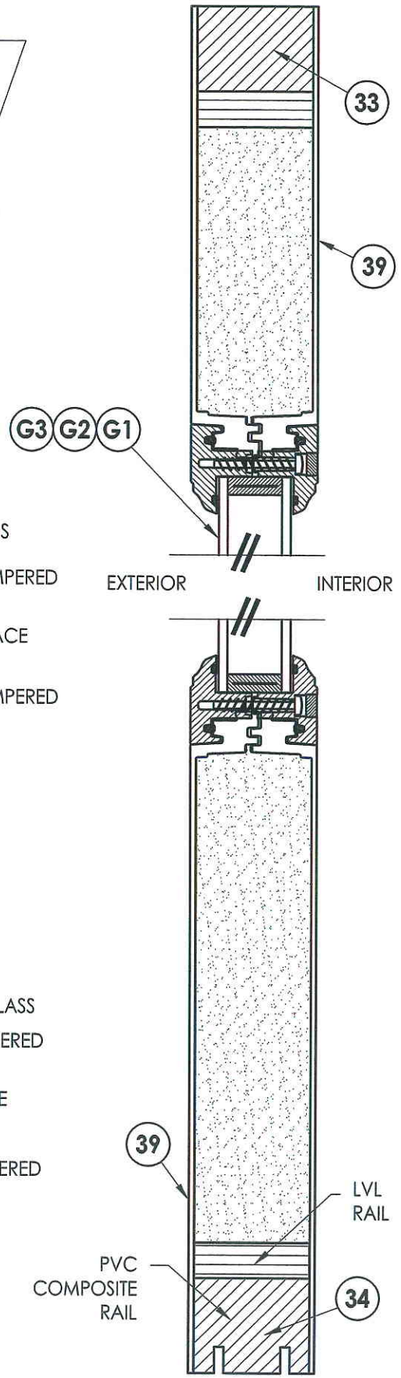

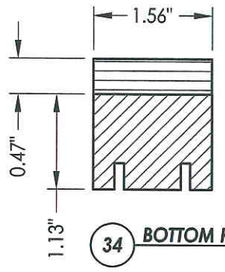

34 **BOTTOM RAIL**

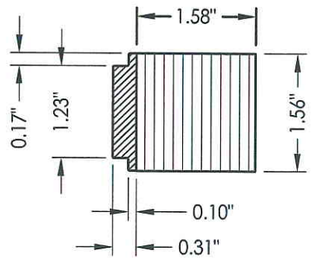

32 **HINGE STILE**

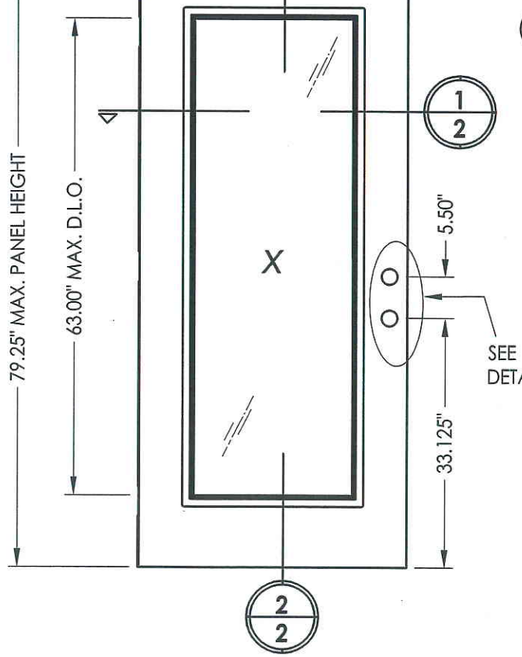

IMPACT FLUSH-GLAZED DOOR

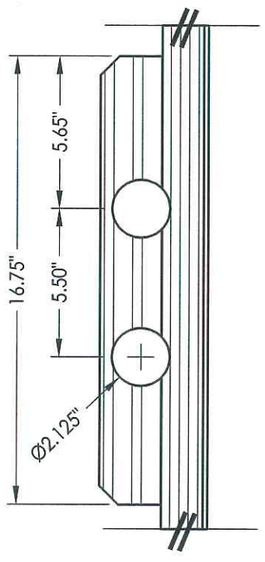

DETAIL 1

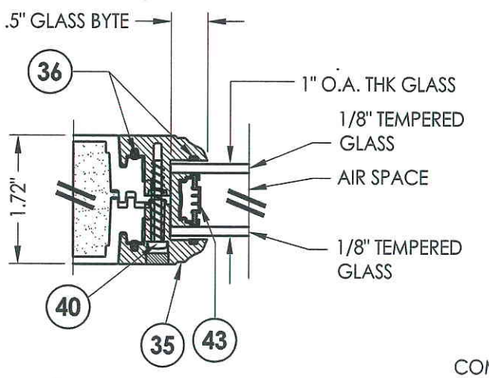

G3 **GLAZING DETAIL**

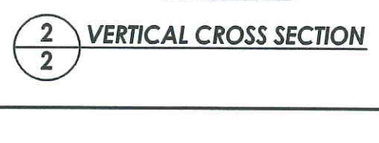

2/2 **VERTICAL CROSS SECTION**

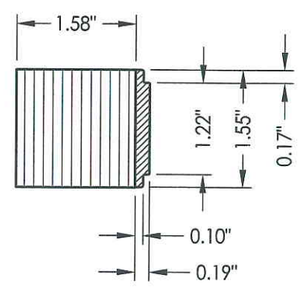

30 **LATCH STILE**

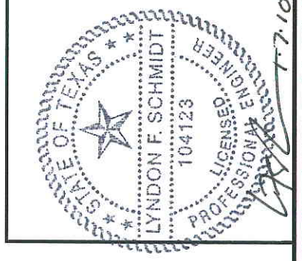

Documents Prepared By: Lyndon F. Schmidt, P.E.
TEXAS P.E. #104123

RW BUILDING CONSULTANTS, INC.
P.O. Box 230 Valrico FL. 33595
Phone No.: 813.659.9197

TEXAS BOARD OF PROFESSIONAL ENGINEERS
CERTIFICATE OF REGISTRATION # F-11852

PRODUCT: TRINITY GLASS INT'L 6'8 FLSUH-GLAZED

PART OR ASSEMBLY: DOOR PANEL CONSTRUCTION DETAILS AND GLAZING DETAILS

NO.	DATE	REVISIONS	BY
2	7/27/09	TDI PRODUCT EVALUATION UPDATE	AL
1	6/28/06	REVISED LOCKSET NOMENCLATURE	EW

DATE: 8/29/05
SCALE: N.T.S.
DWG. BY: WH
CHK. BY: LFS
DRAWING NO.: TX-600
SHEET 2 OF 7

© 2009 R.W. BUILDING CONSULTANTS INC.

R:\A - Projects\Project Folders\Proj 801 - 900\pf895\TX-600\TX-600.dwg, 2

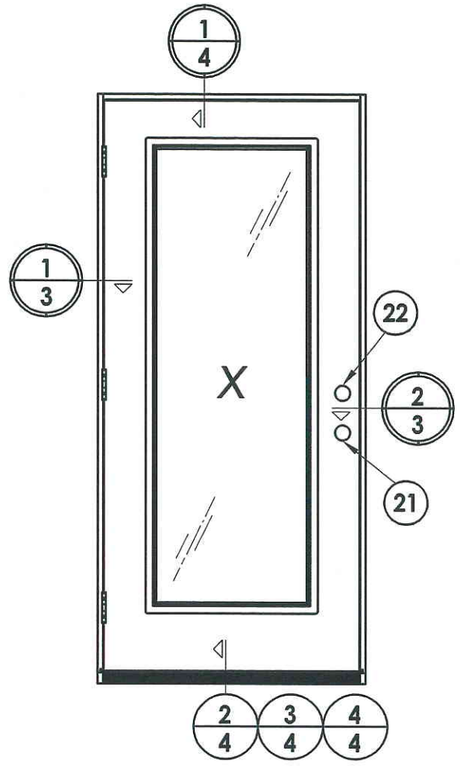

LOCK & DEADBOLT RATINGS CHART				
MANUFACTURER	MODEL	ITEM #	MAX. DESIGN PRESSURE (PSF)	
			POSITIVE	NEGATIVE
KWIKSET	LOCK: 740 DEADBOLT: 780	21 22	+65.0	-65.0
KWIKSET	LOCK: COMBO 660 DEADBOLT: COMBO 660	21 22	+65.0	-65.0
SCHLAGE	LOCK: MAX. SECURITY DEADBOLT: MAX. SECURITY	21 22	+60.0	-60.0

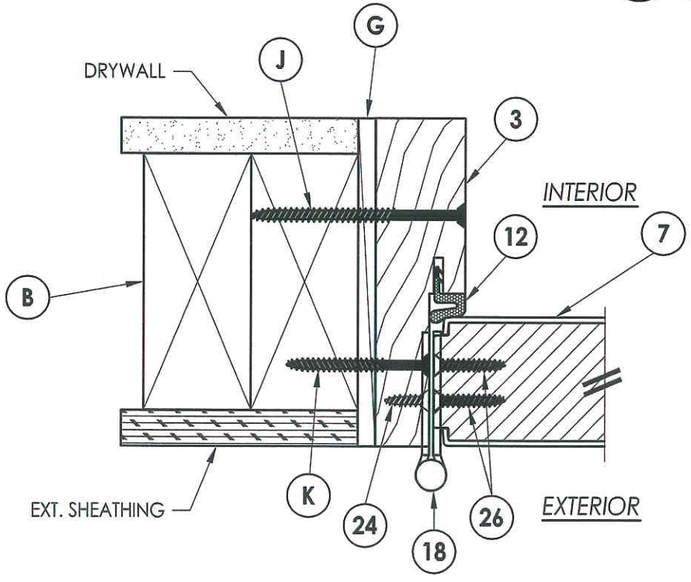

1/3 **HORIZONTAL CROSS SECTION**
Outswing shown
Inswing also approved

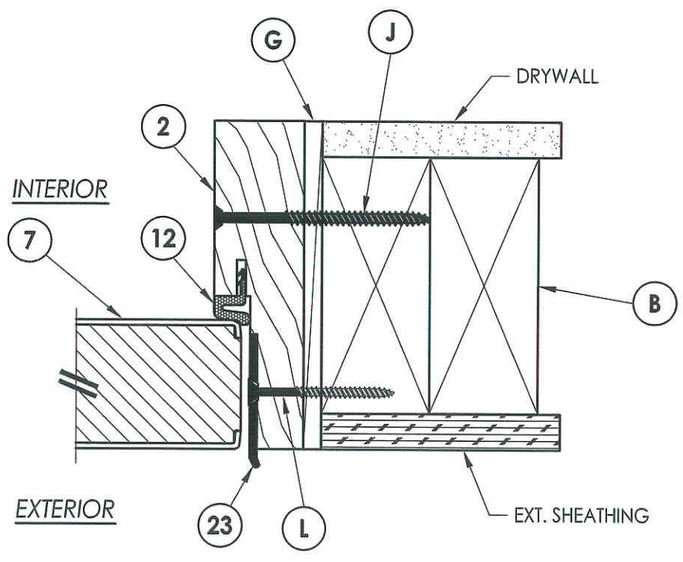

2/3 **HORIZONTAL CROSS SECTION**
Outswing shown
Inswing also approved

STATE OF TEXAS
LYNDON F. SCHMIDT
104123
LICENSED PROFESSIONAL ENGINEER
1.7.10

Documents Prepared By: Lyndon F. Schmidt, P.E.
TEXAS P.E. #104123

R|W BUILDING CONSULTANTS, INC.
P.O. Box 230 Valrico FL. 33595
Phone No.: 813.659.9197

TEXAS BOARD OF PROFESSIONAL ENGINEERS
CERTIFICATE OF REGISTRATION # F-11852

PRODUCT: TRINITY GLASS INT'L 6'8 FLSUH-GLAZED

PART OR ASSEMBLY: HORIZONTAL CROSS SECTIONS

NO.	DATE	REVISIONS	BY
2	7/27/09	TDI PRODUCT EVALUATION UPDATE	AL
1	6/28/06	REVISED LOCKSET NOMENCLATURE	EW

DATE: 8/29/05
SCALE: N.T.S.
DWG. BY: WH
CHK. BY: LFS
DRAWING NO.: TX-600
SHEET 3 OF 7

© 2009 R.W. BUILDING CONSULTANTS INC.

R:\A - Projects\Project Folders\Proj 801 - 900\pf895\TX-600\TX-600.dwg, 3

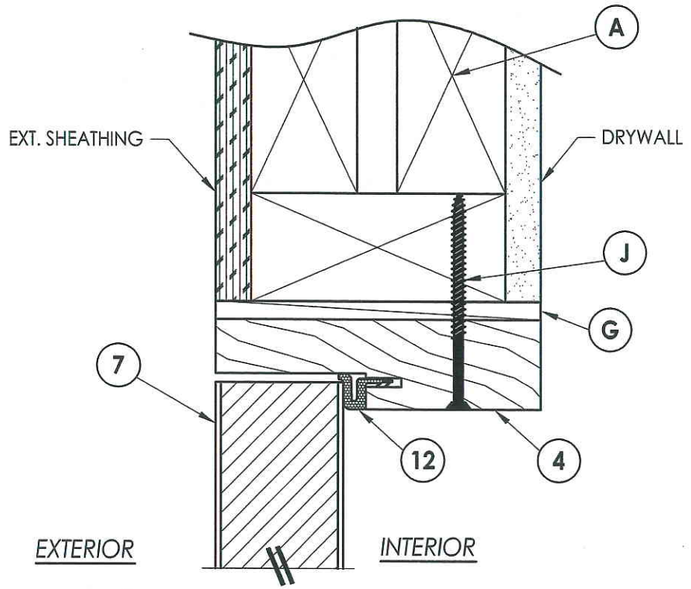

1/4 **VERTICAL CROSS SECTION**
Outswing shown
Inswing also approved

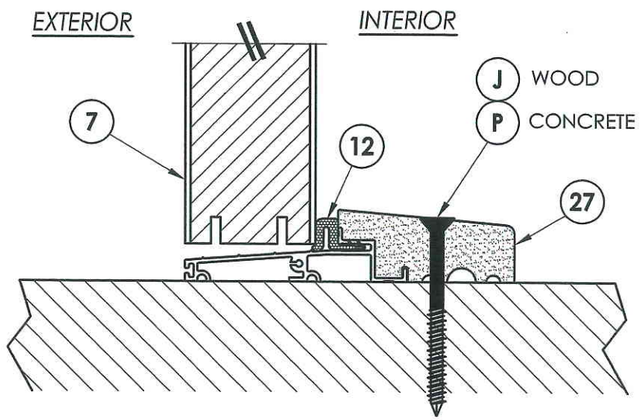

2/4 **VERTICAL CROSS SECTION**
Outswing configuration

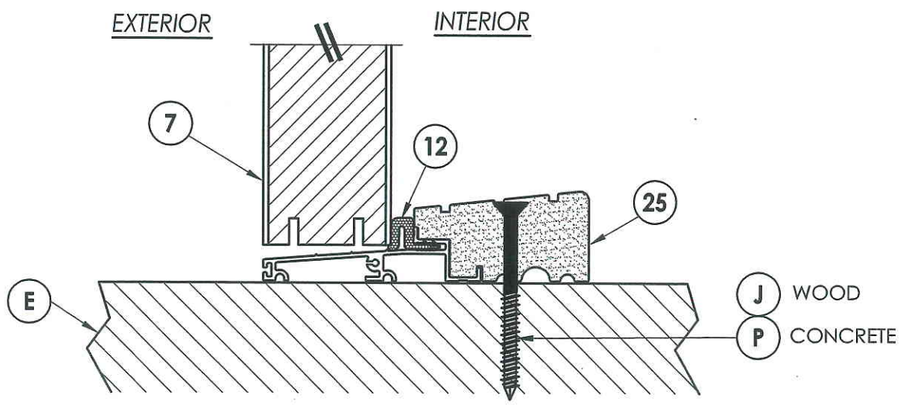

3/4 **VERTICAL CROSS SECTION**
Outswing configuration

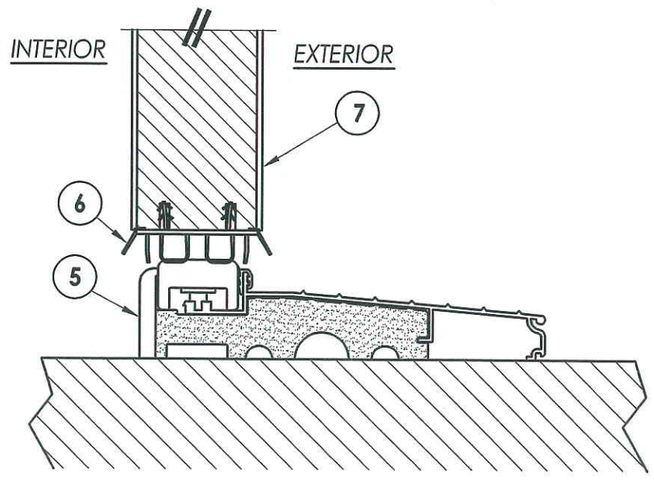

4/4 **VERTICAL CROSS SECTION**
Inswing configuration

STATE OF TEXAS
LYNDON F. SCHMIDT
104123
LICENSED PROFESSIONAL ENGINEER
1.7.10

Documents Prepared By: Lyndon F. Schmidt, P.E.
TEXAS P.E. #104123
RW BUILDING CONSULTANTS, INC.
P.O. Box 230 Valrico FL. 33595
Phone No.: 813.659.9197
TEXAS BOARD OF PROFESSIONAL ENGINEERS
CERTIFICATE OF REGISTRATION # F-11852

PRODUCT: TRINITY GLASS INT'L 6'8 FLSUH-GLAZED

PART OR ASSEMBLY: VERTICAL CROSS SECTIONS

NO.	DATE	REVISIONS	BY
2	7/27/09	TDI PRODUCT EVALUATION UPDATE	AL
1	6/28/06	REVISED LOCKSET NOMENCLATURE	EW

DATE: 8/29/05
SCALE: N.T.S.
DWG. BY: WH
CHK. BY: LFS
DRAWING NO.: TX-600
SHEET 4 OF 7

© 2009 R.W. BUILDING CONSULTANTS INC.

R:\A - Projects\Project Folders\Proj 801 - 900\pf895\TX-600\TX-600.dwg, 4

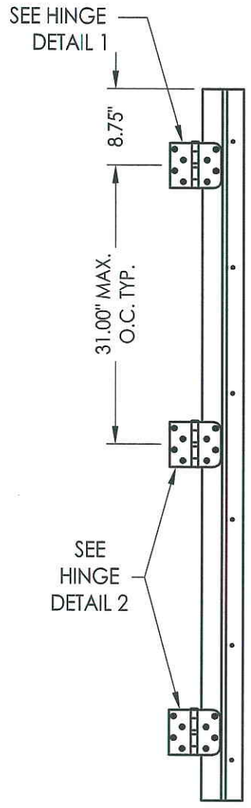

HINGE JAMB

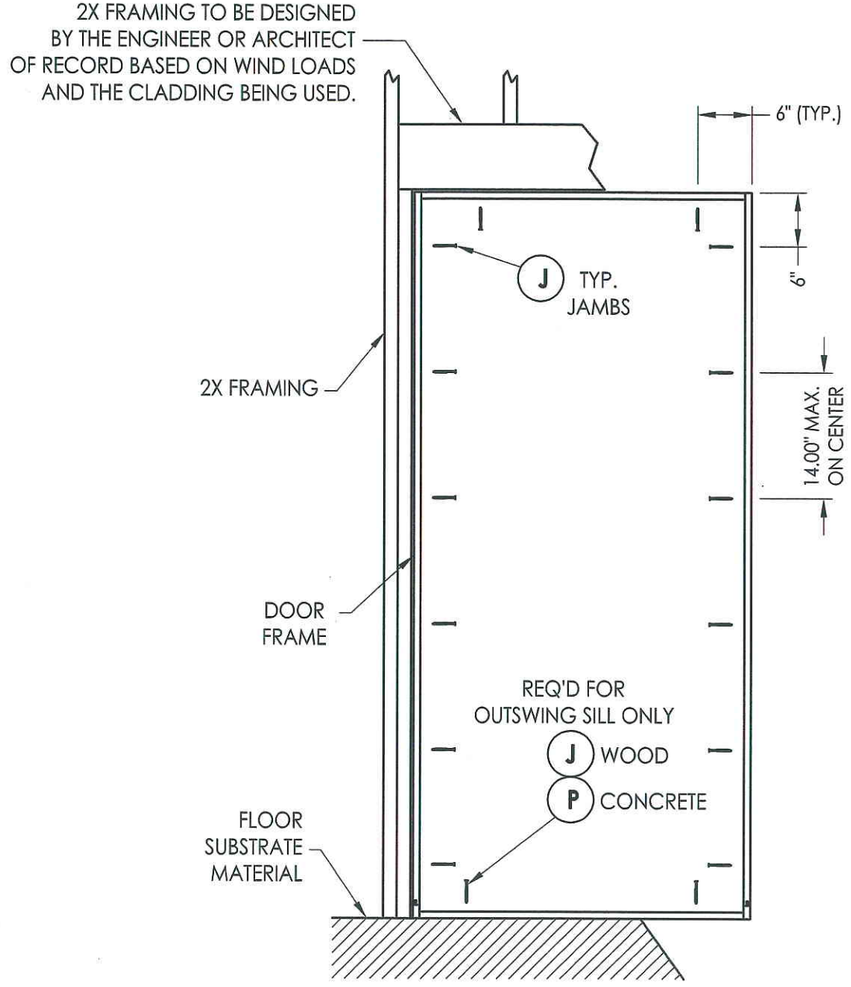

FRAME ANCHORING
Stud construction

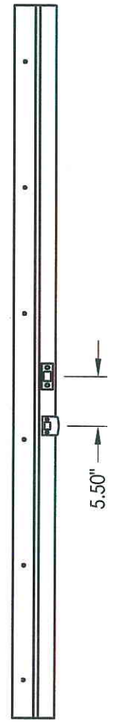

STRIKE JAMB

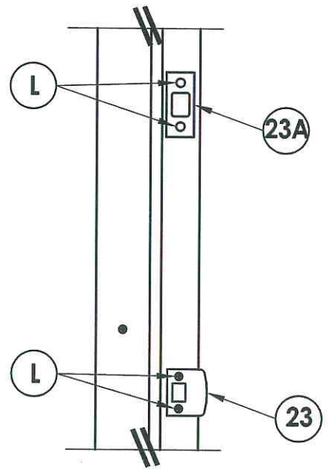

STRIKE PLATE DETAIL

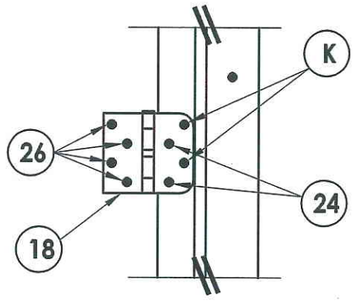

HINGE DETAIL 1

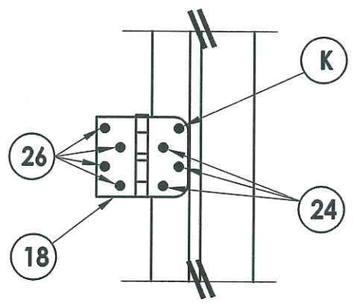

HINGE DETAIL 2

Documents Prepared By: Lyndon F. Schmidt, P.E.
TEXAS P.E. #104123

RW BUILDING CONSULTANTS, INC.
P.O. Box 230 Valrico FL. 33595
Phone No.: 813.659.9197

TEXAS BOARD OF PROFESSIONAL ENGINEERS
CERTIFICATE OF REGISTRATION # F-11852

STATE OF TEXAS · LYNDON F. SCHMIDT · 104123 · LICENSED PROFESSIONAL ENGINEER · 1-7-10

PRODUCT: TRINITY GLASS INT'L 6'8 FLSUH-GLAZED

PART OR ASSEMBLY: FRAME ANCHORING

NO.	DATE	REVISIONS	BY
2	7/27/09	TDI PRODUCT EVALUATION UPDATE	AL
1	6/28/06	REVISED LOCKSET NOMENCLATURE	EW

DATE: 8/29/05
SCALE: N.T.S.
DWG. BY: WH
CHK. BY: LFS
DRAWING NO.: TX-600
SHEET 5 OF 7

© 2009 R.W. BUILDING CONSULTANTS INC.

R:\A - Projects\Project Folders\Proj 801. - 900\pf895\TX-600\TX-600.dwg, 5

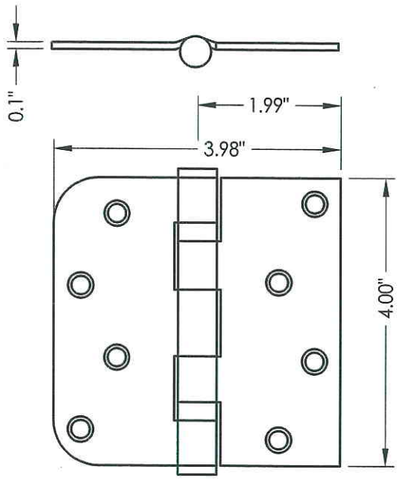

18 **HINGE**

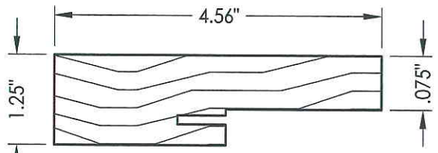

4 3 2 **SIDE & HEAD JAMBS**

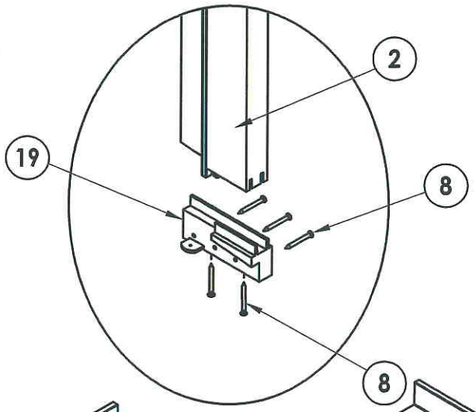

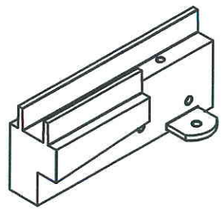

SILLKEY, LEFT
SCALE: NONE

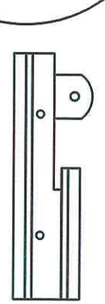

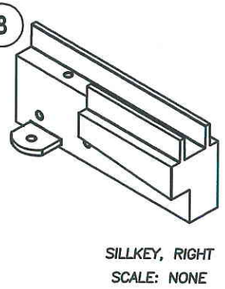

SILLKEY, RIGHT
SCALE: NONE

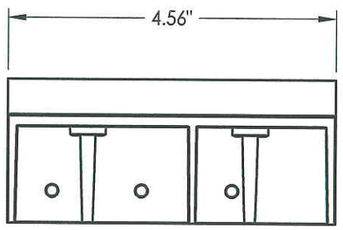

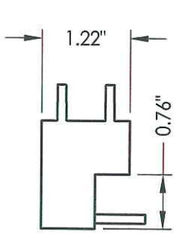

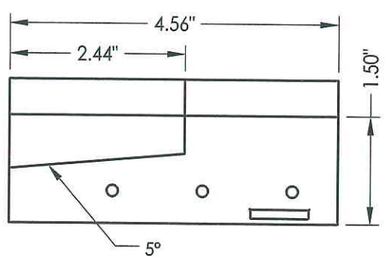

19 **SILLKEY DETAILS**
Optional

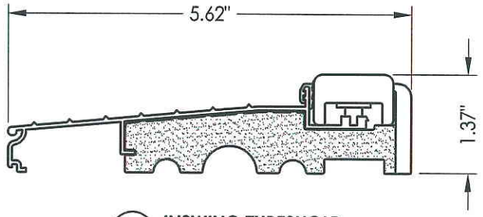

5 **INSWING THRESHOLD**

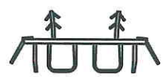

6 **DOOR BOTTOM SWEEP**

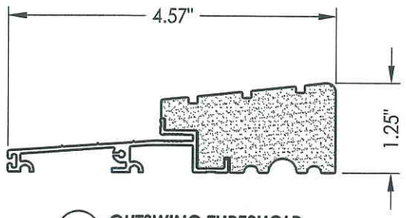

25 **OUTSWING THRESHOLD**
High-dam option

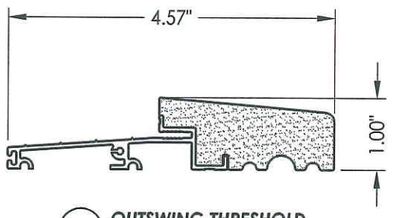

27 **OUTSWING THRESHOLD**

Documents Prepared By: Lyndon F. Schmidt, P.E.
TEXAS P.E. #104123

R|W BUILDING CONSULTANTS, INC.
P.O. Box 230 Valrico FL 33595
Phone No.: 813.659.9197

TEXAS BOARD OF PROFESSIONAL ENGINEERS
CERTIFICATE OF REGISTRATION # F-11852

STATE OF TEXAS
LYNDON F. SCHMIDT
104123
LICENSED
PROFESSIONAL ENGINEER
1-7-10

PRODUCT: TRINITY GLASS INT'L 6'8 FLSUH-GLAZED

PART OR ASSEMBLY: COMPONENTS

NO.	DATE	REVISIONS	BY
2	7/27/09	TDI PRODUCT EVALUATION UPDATE	AL
1	6/28/06	REVISED LOCKSET NOMENCLATURE	EW

DATE: 8/29/05
SCALE: N.T.S.
DWG. BY: WH
CHK. BY: LFS
DRAWING NO.: TX-600
SHEET 6 OF 7

© 2009 R.W. BUILDING CONSULTANTS INC.

R:\A - Projects\Project Folders\Proj 801 - 900\pf895\TX-600\TX-600.dwg, 6

BILL OF MATERIALS

ITEM	DESCRIPTION	MATERIAL
A	2X HEADER FRAMING SG >= 0.42	WOOD
B	2X FRAMING SG >= 0.42	WOOD
G	MAX. 1/4" SHIM SPACE	WOOD
J	#10 X 3" PFH WS	STEEL
K	#9 X 2" PFH WS	STEEL
L	#8 X 2-1/2" PFH WS	STEEL
P	3/16" X 2-3/4" ELCO OR ITW PFH CONCRETE SCREW	STEEL
2	STRIKE JAMB - FINGER-JOINT PINE - SG >= 0.42	WOOD
3	HINGE JAMB - FINGER-JOINT PINE - SG >= 0.42	WOOD
4	HEAD - FINGER-JOINT PINE - SG >= 0.42	WOOD
5	INSWING THRESHOLD ALUMINUM W/ COMPOSITE SUBSTRATE	ALUMINUM
6	DOOR BOTTOM SWEEP	PVC
7	DOOR PANEL - SEE DOOR PANEL DETAIL SHEET FOR CONSTRUCTION DETAILS	-
8	#6 X 1-1/4 PFH DRYWALL SCREW	STEEL
12	WEATHER STRIP QEBD650 Q-LON	-
18	3.983" X 4.0" HINGE MIN 0.098" THICK	STEEL
19	SILLKEY	PC/ASA
21	LOCK (SEE LOCK & DEADBOLT RATINGS CHART)	STEEL
22	DEADBOLT (SEE LOCK & DEADBOLT RATINGS CHART)	STEEL
23	STRIKE PLATE	STEEL
23A	DEADBOLT PLATE	STEEL
24	#9 X 5/8" PFH WS	STEEL
25	OUTSWING HIGH-DAM THRESHOLD ALUMINUM W/ COMPOSITE SUBSTRATE	ALUM./ COMP.
26	#9 X 1.0" PFH WS	STEEL
27	OUTSWING THRESHOLD ALUMINUM W/ COMPOSITE SUBSTRATE	ALUM./ COMP.
30	LATCH STILE - SG >= 0.42	LVL/PVC
31	LVL LOCK BLOCK	POPLAR
32	HINGE STILE - SG >= 0.42	LVL/PVC
33	TOP RAIL - POPLAR LVL & WPC COMBINATION	POPLAR/WPC
34	BOTTOM RAIL - POPLAR LVL & WPC COMBINATION	POPLAR/WPC
35	LITE FRAME	PC/ASA
36	GLAZING COMPOUND	SILICONE
39	FIBERGLASS SKIN 0.079" MIN. THICKNESS (Fy = 5,203 PSI MIN.)	FIBERGLASS
40	#8 X 1-1/8" SELF THREDING SCREW	STEEL
41	POLYPROPYLENE & ALUMINUM COMBINATION GLAZING SPACER	POLY./ALUM.
42	ALUMINUM & BUTYL SPACER SYSTEM	ALUM./BUTYL
43	PVC & ALUMINUM SPACER SYSTEM	PVC/ ALUM.

CONCRETE ANCHOR NOTES:

1. *Substitution of equal concrete anchors from a different supplier may have different edge distance and center distance requirements.*
2. *Concrete anchor locations at the corners may be adjusted to maintain the min. edge distance to mortar joints. If concrete anchor locations noted as "MAX. ON CENTER" must be adjusted to maintain the min. edge distance to mortar joints, additional concrete anchors may be required to ensure the "MAX. ON CENTER" dimensions are not exceeded.*
3. *Concrete anchor table:*

ANCHOR TYPE	ANCHOR SIZE	MIN. EMBEDMENT	MIN. CLEARANCE TO MASONRY EDGE	MIN. CLEARANCE TO ADJACENT ANCHOR
ITW	3/16"	1-3/4"	2-5/8"	2-1/4"
ELCO	3/16"	1-3/4"	1"	3"

STATE OF TEXAS · LYNDON F. SCHMIDT · 104123 · LICENSED PROFESSIONAL ENGINEER

1-7-10

Documents Prepared By: Lyndon F. Schmidt, P.E.
TEXAS P.E. #104123

R|W BUILDING CONSULTANTS, INC.
P.O. Box 230 Valrico FL. 33595
Phone No.: 813.659.9197

TEXAS BOARD OF PROFESSIONAL ENGINEERS
CERTIFICATE OF REGISTRATION # F-11852

PRODUCT: TRINITY GLASS INT'L 6'8 FLSUH-GLAZED

PART OR ASSEMBLY: BILL OF MATERIALS

NO.	DATE	BY	REVISIONS
2	7/27/09	AL	TDI PRODUCT EVALUATION UPDATE
1	6/28/06	EW	REVISED LOCKSET NOMENCLATURE

DATE: 8/29/05
SCALE: N.T.S.
DWG. BY: WH
CHK. BY: LFS
DRAWING NO.: TX-600
SHEET 7 OF 7

© 2009 R.W. BUILDING CONSULTANTS INC.

R:\A - Projects\Project Folders\Proj 801 - 900\pf895\TX-600\TX-600.dwg, 7