ARAMCO OUTSIDE BLINDS

DRAWINGS INDEX:

C1————————COVER SHEET
S1.1————————CLOSED BLIND VIEW
S1.2————————BLIND ASSEMBLY
S1.3————————OPEN BLIND VIEW
D1.1————————DETAILS

GENERAL NOTES:

1. THE OUTSIDE BLIND WAS TESTED IN ACCORDANCE WITH ASTM E330 TEST STANDARD.
2. MAXIMUM OVERALL DIMENSIONS: 36" WIDE X 60" TALL X 3" DEEP.
3 THE MAXIMUM DESIGN PRESSURE = +40.0 PSF / −50.0 PSF.
4. THE OUTSIDE BLIND IS NOT IMPACT RATED.
5. THE OUTSIDE BLIND MUST HAVE A MINIMUM SEPERATION DISTANCE OF 3 5/8" BETWEEN THE GLASS AND THE INSIDE OF THE BLIND BLADE.
6. ALL ALUMINUM SECTIONS ARE 3105−H24, 0.040" THICKNESS, PAINTED FINISH.
7. ALL FASTENERS SHALL BE CORROSION RESISTANCE IN ACCORDANCE WITH INTERNATIONAL RESIDENTIAL CODE (IRC) AND INTERNATIONAL BUILDING CODE (IBC).
8. ATTACHMENT TO WALL SHALL BE AS FOLLOWS:
   −EXISTING WOOD SHALL BE MINIMUM NO. 2 SOUTHERN YELLOW PINE WITH G=0.55.
   −#8−18 x 2" WOOD SCREW AT 6" O.C. ON EACH BLIND SIDE.
   −MINIMUM 3/4" THREADED PENETRATION INTO THE WOOD FRAMING OF THE STRUCTURE.
   −THE BLINDS MAY BE INSTALLED ONTO THE FACE OF SIDING OR WOOD TRIM WITH A THICKNESS NO GREATER THAN 1 1/4".
9. IT SHALL BE THE RESPONSIBILITY OF THE CONTRACTOR TO VERIFY THE SOUNDNESS OF THE WOOD FRAMING WHERE THE OUTSIDE BLIND IS TO BE ATTACHED TO INSURE PROPER ATTACHMENT. THE OUTSIDE BLIND SHALL BE ATTACHED TO THE WOOD FRAMING OF THE STRUCTURE.
10. THE OUTSIDE BLIND SHALL COMPLY WITH ALL SPECIFICATIONS INDICATED IN THESE DRAWINGS AND ANY BUILDING AND ZONING REGULATIONS PROVIDED BY THE JURISDICTION WHERE PERMIT IS APPLIED.
11. THIS PRODUCT EVALUATION DOCUMENT WILL BE CONSIDERED INVALID IF ALTERED BY ANY MEANS.

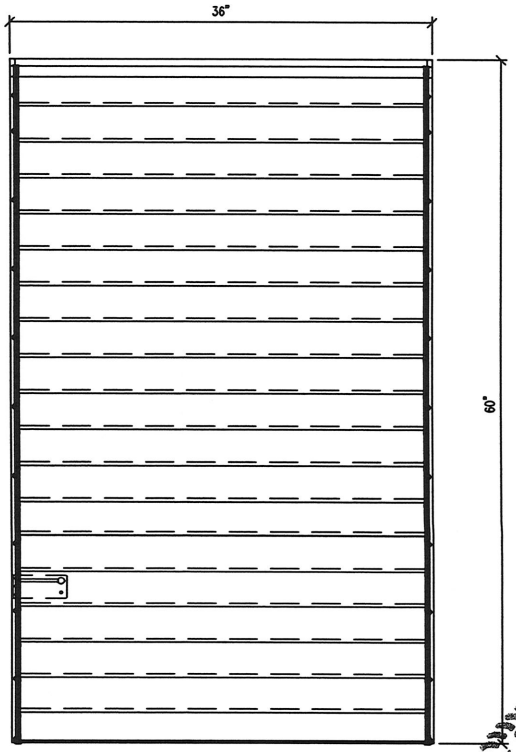

OUTSIDE BLIND
(19 LOUVERS)

STATE OF TEXAS
BRANDON T. JASEK
95727
LICENSED
PROFESSIONAL ENGINEER

12-3-15

DESCRIPTION	DATE	BY	REV

DRAWN BY: RD
DATE DRAWN: 12/1/2015
CHECKED BY:
DATE CHECKED:
APPROVED BY:
DATE APPROVED:
SCALE: A.N.

Pena Engineering & Testing Inc.
18530 RAMBLEWOOD DRIVE, HUMBLE, TX 77338
(281) 540-4900 Fax: (281) 540-4999

PROJECT: ARAMCO OUTSIDE BLINDS
LOCATION:
CONTRACTOR:
ARCHITECT:
JOB NO: 562-0229-15
DRAWING NO: C1
REV NO: A

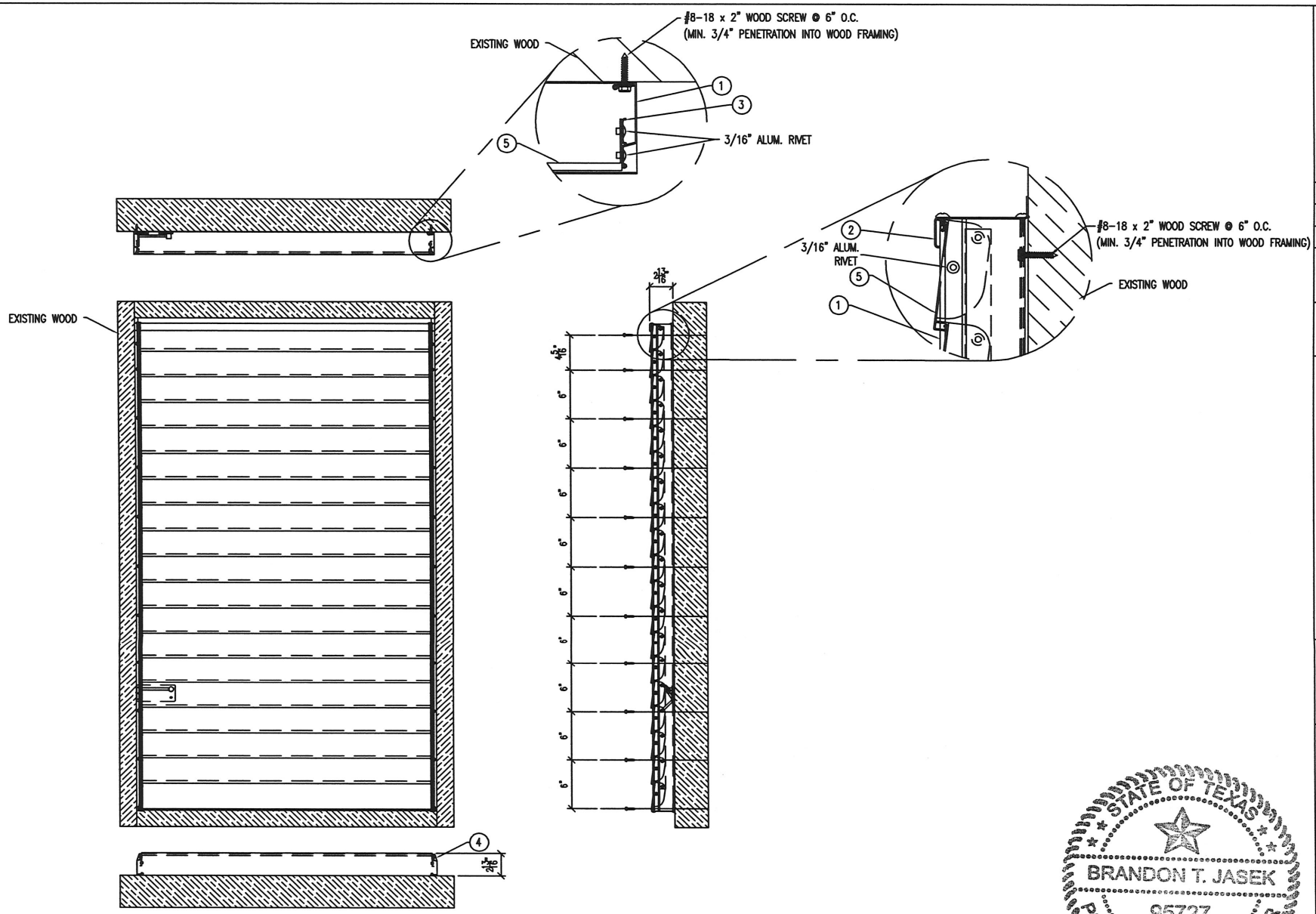

1 CLOSED BLIND VIEW

STATE OF TEXAS
BRANDON T. JASEK
95727
LICENSED
PROFESSIONAL ENGINEER

12-3-15

REV	BY	DATE	DESCRIPTION

DRAWN BY: KD
DATE DRAWN: 12/1/2015
CHECKED BY:
DATE CHECKED:
APPROVED BY:
DATE APPROVED:
SCALE: A.N.

Force Engineering & Testing Inc.
19330 RAMBLEWOOD DRIVE HAMBLE, TX 77338
(281) 540-9003 Fax: (281) 540-9006

PROJECT: ARAMCO OUTSIDE BLINDS
LOCATION:
CONTRACTOR:
ARCHITECT:
JOB NO: 562-0229-15
DRAWING NO: S1.1
REV NO: A

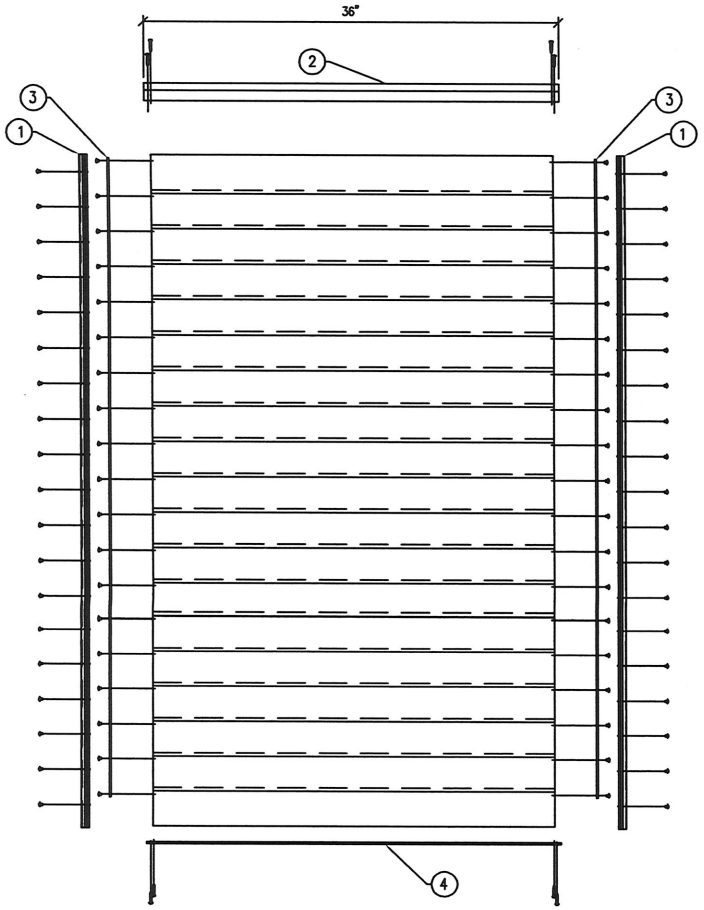

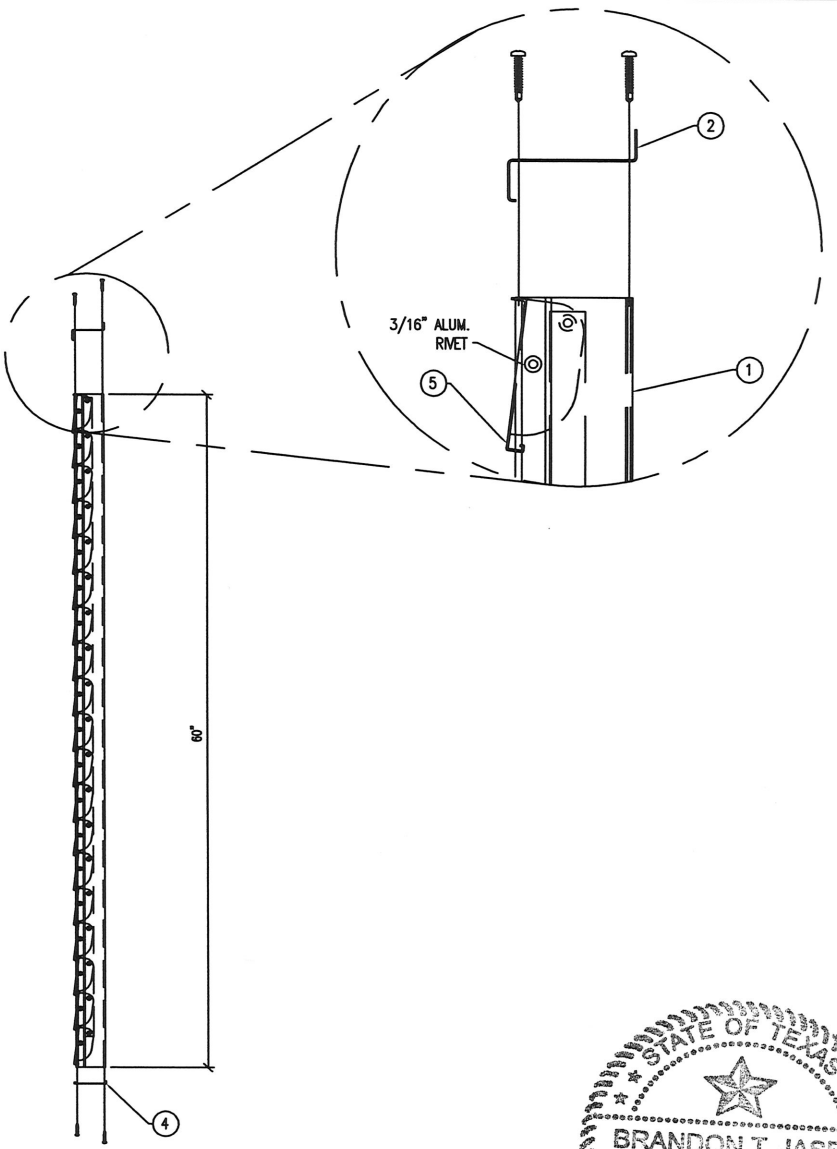

1 BLIND ASSEMBLY

STATE OF TEXAS
BRANDON T. JASEK
95727
LICENSED
PROFESSIONAL ENGINEER

11-3-15

REV	BY	DATE	DESCRIPTION

DRAWN BY: KD
DATE DRAWN: 12/1/2015
CHECKED BY:
DATE CHECKED:
APPROVED BY:
DATE APPROVED:
SCALE: A.N.

Pierce Engineering & Testing Inc.
18530 HAMBLEDON DRIVE, HOUSTON, TX 77336
(281) 540-6603 Fax: (281) 540-6666

PROJECT: ARAMCO OUTSIDE BLINDS
LOCATION:
CONTRACTOR:
ARCHITECT:
JOB NO: 562-0229-15
DRAWING NO: S1.2
REV NO: A

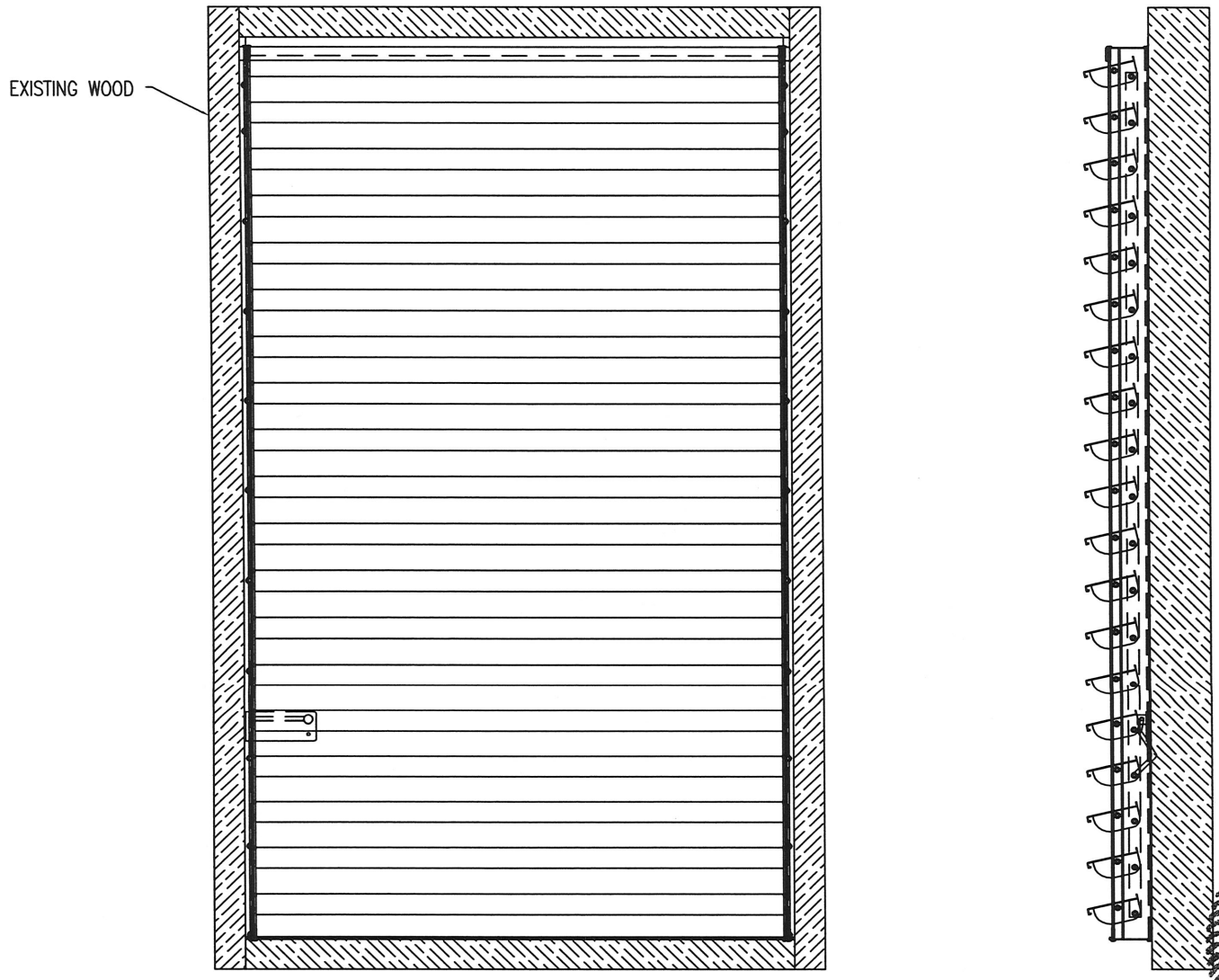

1 OPEN BLIND VIEW
NOT TO SCALE

STATE OF TEXAS
BRANDON T. JASEK
95727
LICENSED
PROFESSIONAL ENGINEER

12-3-15

REV	BY	DATE	DESCRIPTION

DRAWN BY: KD
DATE DRAWN: 12/1/2015
CHECKED BY:
DATE CHECKED:
APPROVED BY:
DATE APPROVED:
SCALE: A.N.

Force Engineering & Testing Inc.
19530 RAMBLEWOOD DRIVE HUMBLE, TX 77338
(281) 540-0003 Fax: (281) 540-9998

PROJECT: ARAMCO OUTSIDE BLINDS
LOCATION:
CONTRACTOR:
ARCHITECT:
JOB NO: 562-0229-15
DRAWING NO: S1.3
REV NO: A

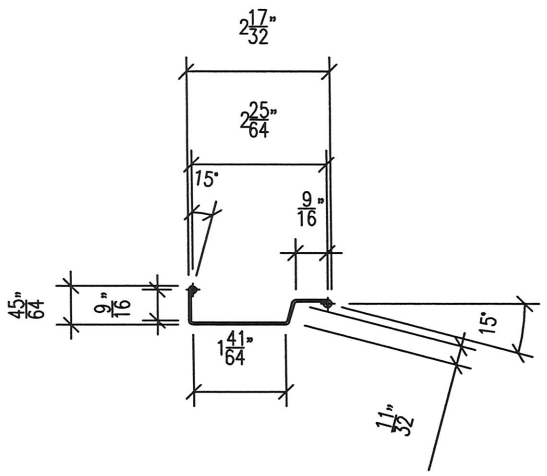

1 DETAIL ITEM '1' (FRAME SIDE)

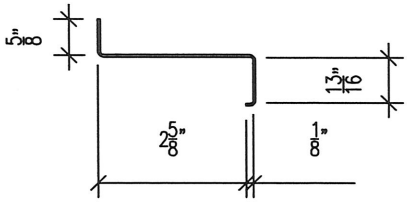

2 DETAIL ITEM '2' (FRAME TOP)

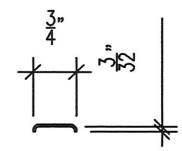

3 DETAIL ITEM '3' (LOUVER CHANNEL)

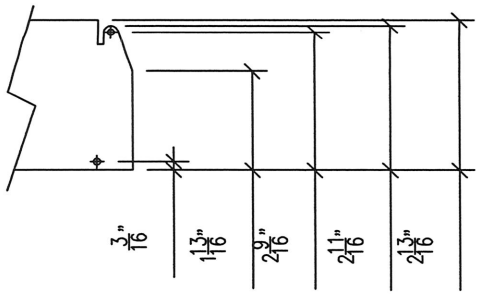

4 DETAIL ITEM '4' (FRAME BOTTOM)

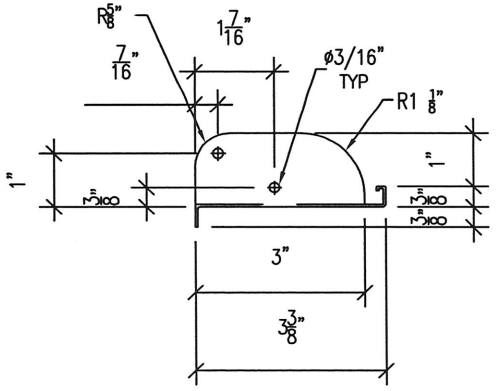

5 DETAIL ITEM '5' (LOUVER BLADE)

STATE OF TEXAS
BRANDON T. JASEK
95727
LICENSED
PROFESSIONAL ENGINEER

12-3-15

REV	BY	DATE	DESCRIPTION

DRAWN BY: KD
DATE DRAWN: 12/1/2015
CHECKED BY:
DATE CHECKED:
APPROVED BY:
DATE APPROVED:
SCALE: A.N.

Force Engineering & Testing Inc.
19530 RAMBLEWOOD DRIVE HUMBLE, TX 77338
(281) 540-6003 Fax (281) 540-9998

PROJECT: ARAMCO OUTSIDE BLINDS
LOCATION:
CONTRACTOR:
ARCHITECT:
JOB NO: 562-0229-15
DRAWING NO: D1.1
REV NO: A