REVISIONS			
REV	DESCRIPTION	DATE	APPROVED

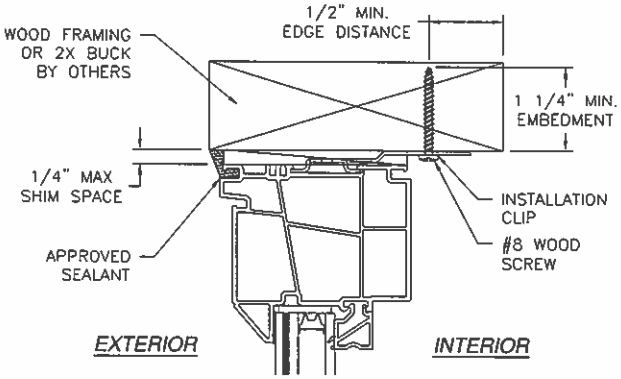

VERTICAL CROSS SECTION
WOOD FRAMING OR 2X BUCK INSTALLATION
HEAD SHOWN, SILL AND JAMBS SIMILAR

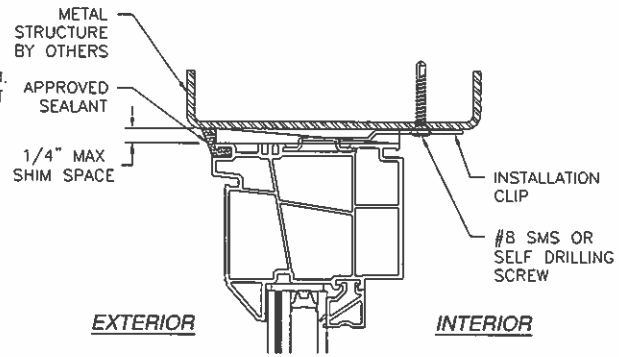

VERTICAL CROSS SECTION
METAL STRUCTURE INSTALLATION
HEAD SHOWN, SILL AND JAMBS SIMILAR

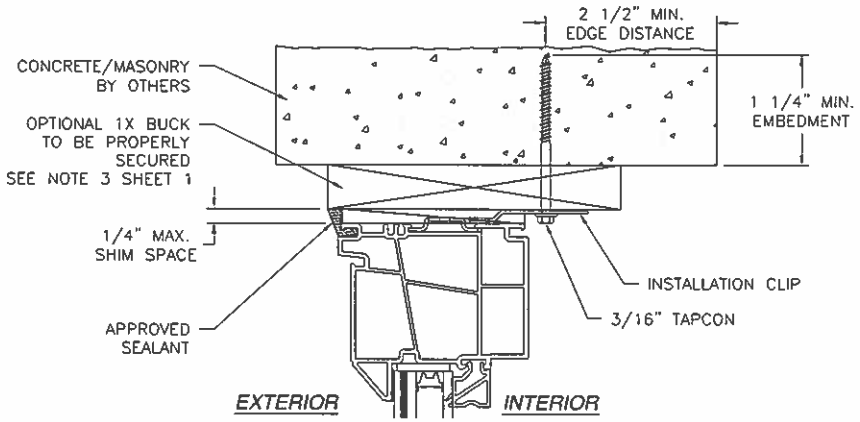

VERTICAL CROSS SECTION
CONCRETE/MASONRY INSTALLATION
HEAD SHOWN, SILL AND JAMBS SIMILAR

NOTE:
INTERIOR AND EXTERIOR FINISHES, BY OTHERS, NOT SHOWN FOR CLARITY.

SIGNED: 07/23/2013

KOLBE & KOLBE MILLWORK
1211 DEPOT ST.
MANAWA, WI 54949

WINDQUEST FIXED WINDOW
60" x 96"
INSTALLATION DETAILS

DRAWN:	DWG NO.	REV
J.L.	08-02165	-
SCALE NTS	DATE 07/23/13	SHEET 4 OF 4

STATE OF TEXAS
LUIS R. LOMAS
101889
LICENSED
PROFESSIONAL ENGINEER

Luis R. Lomas P.E.
Texas No. 101889

REVISIONS			
REV	DESCRIPTION	DATE	APPROVED

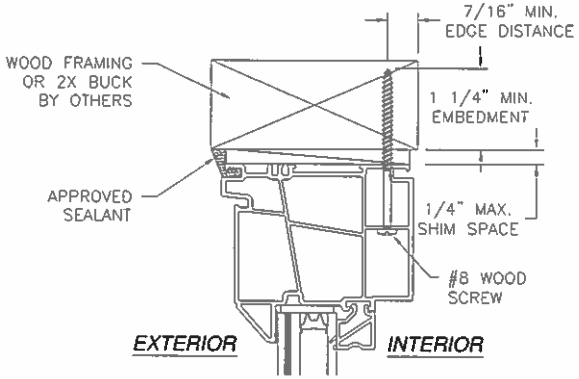

VERTICAL CROSS SECTION
WOOD FRAMING OR 2X BUCK INSTALLATION
HEAD SHOWN, SILL AND JAMBS SIMILAR

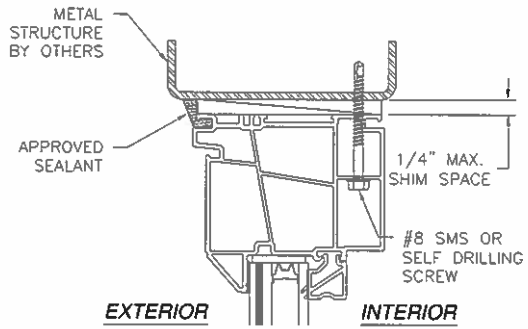

VERTICAL CROSS SECTION
METAL STRUCTURE INSTALLATION
HEAD SHOWN, SILL AND JAMBS SIMILAR

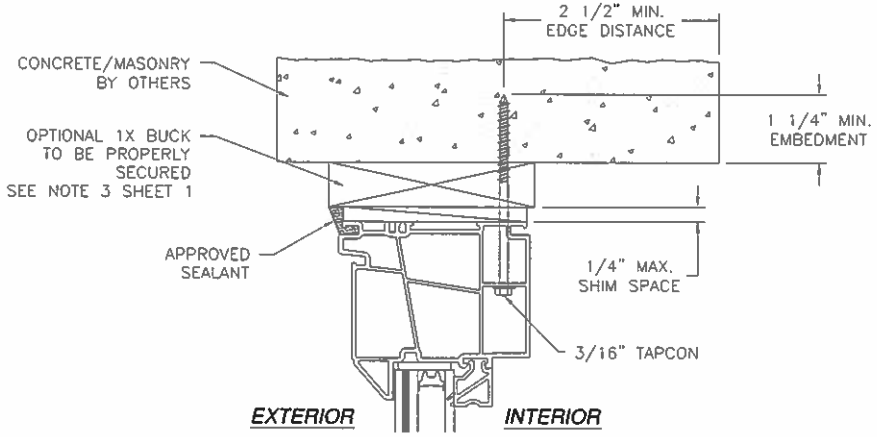

VERTICAL CROSS SECTION
CONCRETE/MASONRY INSTALLATION
HEAD SHOWN, SILL AND JAMBS SIMILAR

NOTE:
INTERIOR AND EXTERIOR FINISHES, BY OTHERS, NOT SHOWN FOR CLARITY.

SIGNED: 07/23/2013

KOLBE & KOLBE MILLWORK
1211 DEPOT ST.
MANAWA, WI 54949

WINDQUEST FIXED WINDOW
60" x 96"
INSTALLATION DETAILS

DRAWN: J.L.	DWG NO. 08-02165	REV –
SCALE NTS	DATE 07/23/13	SHEET 3 OF 4

STATE OF TEXAS
LUIS R. LOMAS
101889
LICENSED
PROFESSIONAL ENGINEER

Luis R. Lomas P.E.
Texas No. 101889

PARTS LIST				
NO.	PART NUMBER	DESCRIPTION	MANUFACTURER	MATERIAL
1	4509A	FRAME	THERMOPLAST INC	WHITE PVC
2	4413	GLAZING BEAD	THERMOPLAST INC	WHITE PVC
3		SETTING BLOCK		80 DUROMETER
4		DOW 995 SEALANT	DOW CORNING	
5	4560	INSTALLATION STRIP		STEEL G60

REVISIONS			
REV	DESCRIPTION	DATE	APPROVED

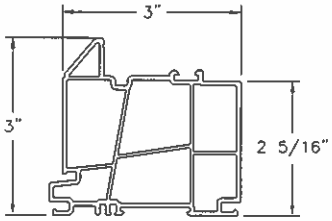

1 FRAME
VINYL PVC .079 THICK

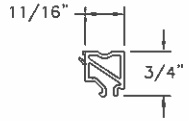

2 GLAZING BEAD
VINYL PVC .059 THICK

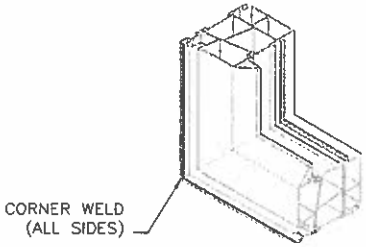

FRAME CORNER CONSTRUCTION

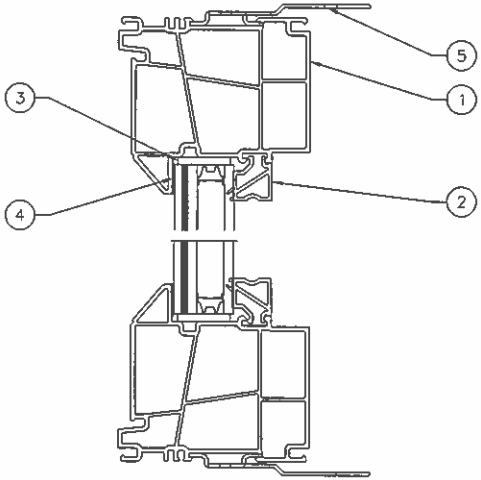

VERTICAL SECTION

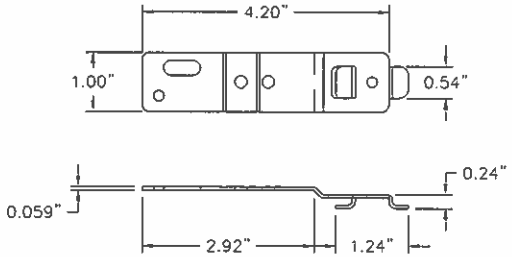

5 INSTALLATION STRIP
GALVANIZED STEEL G60

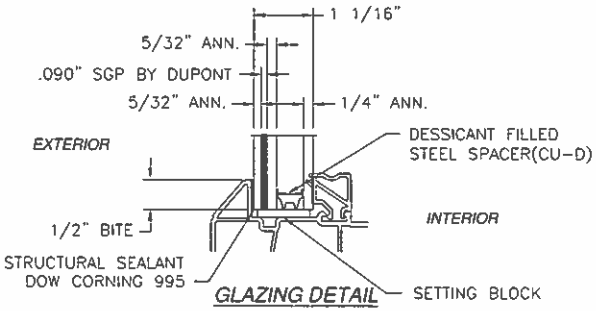

GLAZING DETAIL

SIGNED: 07/23/2013

KOLBE & KOLBE MILLWORK
1211 DEPOT ST.
MANAWA, WI 54949

WINDQUEST FIXED WINDOW
60" x 96"
CROSS SECTIONS, B.O.M. AND COMPONENTS

DRAWN: J.L.	DWG NO. 08-02165	REV -
SCALE NTS	DATE 07/23/13	SHEET 2 OF 4

Luis R. Lomas P.E.
Texas No. 101889

REVISIONS			
REV	DESCRIPTION	DATE	APPROVED

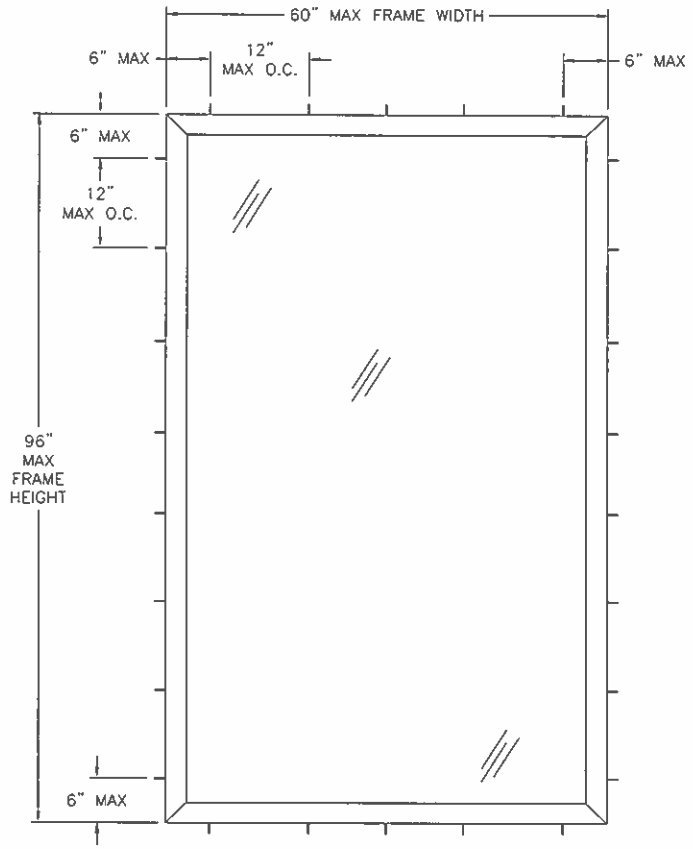

WINDQUEST FIXED WINDOW

EXTERIOR VIEW FRAME AND CLIP INSTALLATION

DESIGN PRESSURE RATING	IMPACT RATING
±50PSF	LARGE AND SMALL MISSILE IMPACT

MISSILE LEVEL D, WIND ZONE 4, AND HVHZ

NOTES:

1. THE PRODUCT SHOWN HEREIN IS DESIGNED AND MANUFACTURED TO COMPLY WITH REQUIREMENTS OF THE 2006 IBC AND 2006 IRC WITH STATE OF TEXAS MODIFICATIONS.
2. WOOD FRAMING AND MASONRY OPENING TO BE DESIGNED AND ANCHORED TO PROPERLY TRANSFER ALL LOADS TO STRUCTURE. FRAMING AND MASONRY OPENING IS THE RESPONSIBILITY OF THE ARCHITECT OR ENGINEER OF RECORD.
3. 1X BUCK OVER MASONRY/CONCRETE IS OPTIONAL. WHERE 1X BUCK IS NOT USED DISSIMILAR MATERIALS MUST BE SEPARATED WITH APPROVED COATING OR MEMBRANE. SELECTION OF COATING OR MEMBRANE IS THE RESPONSIBILITY OF THE ARCHITECT OR ENGINEER OF RECORD.
4. ALLOWABLE STRESS INCREASE OF 1/3 WAS NOT USED IN THE DESIGN OF THE PRODUCT SHOWN HEREIN. WIND LOAD DURATION FACTOR Cd=1.6 WAS USED FOR WOOD ANCHOR CALCULATIONS.
5. FRAME MATERIAL: EXTRUDED RIGID PVC.
6. UNITS MUST BE GLAZED PER ASTM E1300-04, SEE SHEET 2 FOR GLASS OPTIONS.
7. APPROVED IMPACT PROTECTIVE SYSTEM IS NOT REQUIRED FOR THIS PRODUCT IN WIND BORNE DEBRIS REGIONS.
8. SHIM AS REQUIRED AT EACH INSTALLATION ANCHOR WITH LOAD BEARING SHIM. SHIM WHERE SPACE OF 1/16" OR GREATER OCCURS. MAXIMUM ALLOWABLE SHIM STACK TO BE 1/4".
9. FOR ANCHORING INTO WOOD FRAMING OR 2X BUCK USE #8 WOOD SCREWS WITH SUFFICIENT LENGTH TO ACHIEVE A 1 1/4" MINIMUM EMBEDMENT INTO SUBSTRATE. LOCATE ANCHORS AS SHOWN IN ELEVATIONS AND INSTALLATION DETAILS.
10. FOR ANCHORING INTO MASONRY/CONCRETE USE 3/16" TAPCONS WITH SUFFICIENT LENGTH TO ACHIEVE A 1 1/4" MINIMUM EMBEDMENT INTO SUBSTRATE WITH 2 1/2" MINIMUM EDGE DISTANCE. LOCATE ANCHORS AS SHOWN IN ELEVATIONS AND INSTALLATION DETAILS.
11. FOR ANCHORING INTO METAL STRUCTURE USE #8 SMS OR SELF DRILLING SCREWS WITH SUFFICIENT LENGTH TO ACHIEVE 3 THREADS MINIMUM BEYOND STRUCTURE INTERIOR WALL. LOCATE ANCHORS AS SHOWN IN ELEVATIONS AND INSTALLATION DETAILS.
12. ALL FASTENERS TO BE CORROSION RESISTANT.
13. INSTALLATION ANCHORS SHALL BE INSTALLED IN ACCORDANCE WITH ANCHOR MANUFACTURER'S INSTALLATION INSTRUCTIONS AND ANCHORS SHALL NOT BE USED IN SUBSTRATES WITH STRENGTHS LESS THAN THE MINIMUM STRENGTH SPECIFIED BELOW:
    A. WOOD – MINIMUM SPECIFIC GRAVITY OF G=0.42
    B. CONCRETE – MINIMUM COMPRESSIVE STRENGTH OF 3,192 PSI.
    C. MASONRY – STRENGTH CONFORMANCE TO ASTM C-90, GRADE N, TYPE 1 (OR GREATER).
    D. METAL STRUCTURE: STEEL 18GA, 33KSI OR ALUMINUM 6063-T5 1/8" THICK MINIMUM

SIGNED: 07/23/2013

TABLE OF CONTENTS

SHEET NO.	DESCRIPTION
1 – 2	ELEVATION, ANCHORING AND NOTES
3	CROSS SECTIONS, B.O.M., COMPONENTS
4	INSTALLATION DETAILS

KOLBE & KOLBE MILLWORK
1211 DEPOT ST.
MANAWA, WI 54949

WINDQUEST FIXED WINDOW
60" x 96"
ELEVATION AND NOTES

DRAWN:	DWG NO.	REV
J.L.	08-02165	–

SCALE	DATE	SHEET
NTS	07/23/13	1 OF 4

STATE OF TEXAS
LUIS R. LOMAS
101889
LICENSED
PROFESSIONAL ENGINEER

Luis R. Lomas P.E.
Texas No. 101889