NAIL FIN INSTALLATION

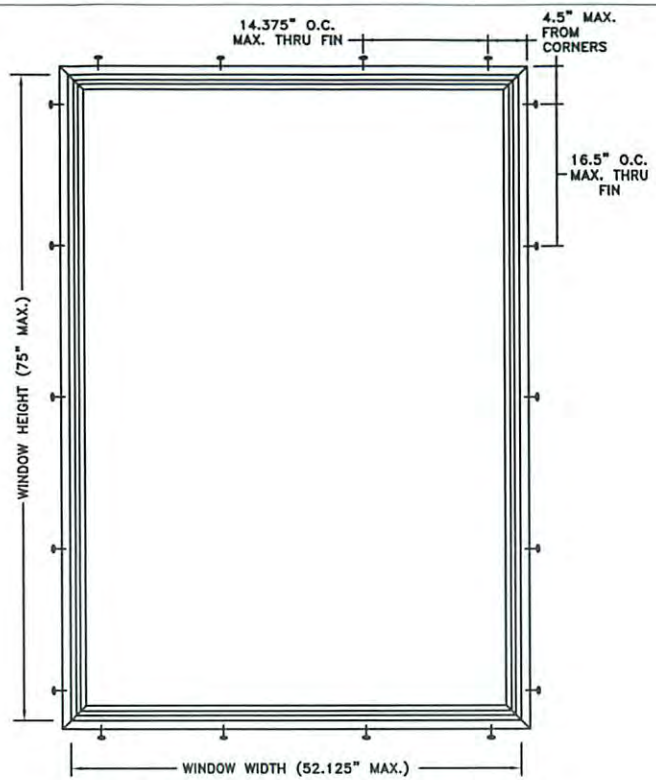

TYPICAL ELEVATION WITH FASTENER SPACING

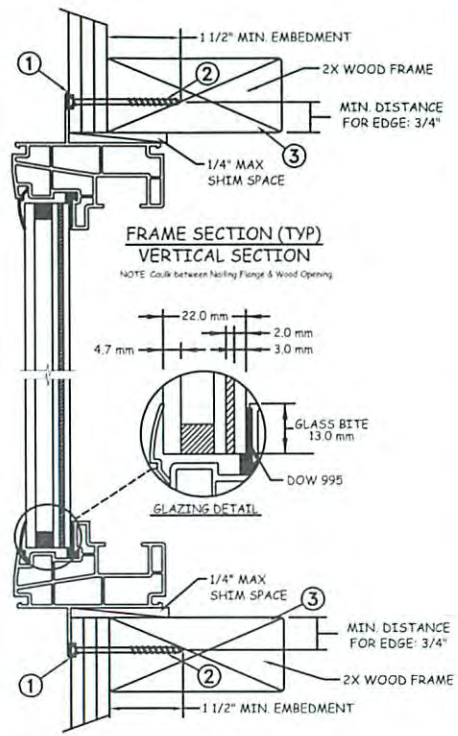

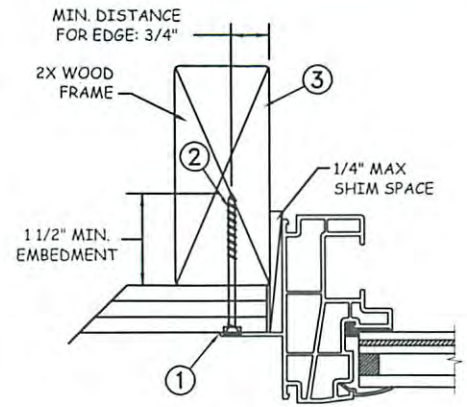

JAMB SECTION (TYP)
HORIZONTAL SECTION
NOTE: Caulk between Nailing Flange & Wood Opening

Max Frame	DP RATING	IMPACT
52 1/8 x 75	+/-65	YES

Installation Notes:

1. Seal flange/frame to substrate.
2. Use #10 PH or greater fastener though the nail fin with sufficient length to penetrate a minimum of 1 1/2" into the wood framing. For 2X wood frame substrate (min. S.G. = 0.42).
3. Host structure (wood buck, masonry, steel) to be designed and anchored to properly transfer all loads to the structure. The host structure is the responsibility of the architect or engineer of record for the project of installation.

General Notes:

1. The product shown herein is designed, tested and manufactured to comply with the wind load criteria of the adopted International Building Code(IBC), the International Residential Code(IRC), the Texas Revisions and the industry requirement for the stated conditions.
2. All glazing shall conform to ASTM E1300.
3. At minimum, glazing shall be 4.7mm tempered - 17mm airspace - 3.0 annealed - 2.0mm SGP Interlayer - 3.0 annealed.
4. Use structural or composite shims where required.
5. Installation methods can be interchanged within the same opening.
6. An impact protective system is not required where wind borne debris protection is mandated by local building code.
7. Maximum sizes are buck sizes and do not include fin or flange.

This schedule addresses only the fasteners required to anchor the window to achieve the rated design pressure up to the size limitations noted. It is not intended as a guide to the installation process and does not address the sealing consideration that may arise in different wall conditions. For the complete installation procedure, see the instructions packaged with the window or go to www.jeld-wen.com/resources/installation.

DISCLAIMER:
This drawing and its contents are confidential and are not to be reproduced or copied in whole or in part or used or disclosed to others except as authorized by JELD-WEN Inc.

STATE OF TEXAS
ALEXIS SPYROU
102957
LICENSED
PROFESSIONAL ENGINEER
3-6-14

ALEXIS SPYROU, P.E.
Texas P.E. No. 102957
398 East Dania Beach Blvd., Suite 338
Dania Beach, FL 33004

PROJECT ENGINEER: --	DATE: 01/30/2014	JELD-WEN	3737 Lakeport Blvd, Klamath Falls, OR. 97601, Phone: (541) 882-3451
DRAWN BY: D. Vezo	SCALE: NTS		
CHECKED BY: J. Kantola	TITLE: Premium Atlantic Vinyl Impact Fixed Window Nail Fin Installation (52.125" x 75")		
APPROVED BY: --			
PART/PROJECT No.: D009461			
IDENTIFIER No. NCTL210-3908-1	PLANT NAME AND LOCATION: -TDI	CAD DWG. No.:	REV: 00 / SHEET 1 OF 4

THROUGH FRAME INSTALLATION

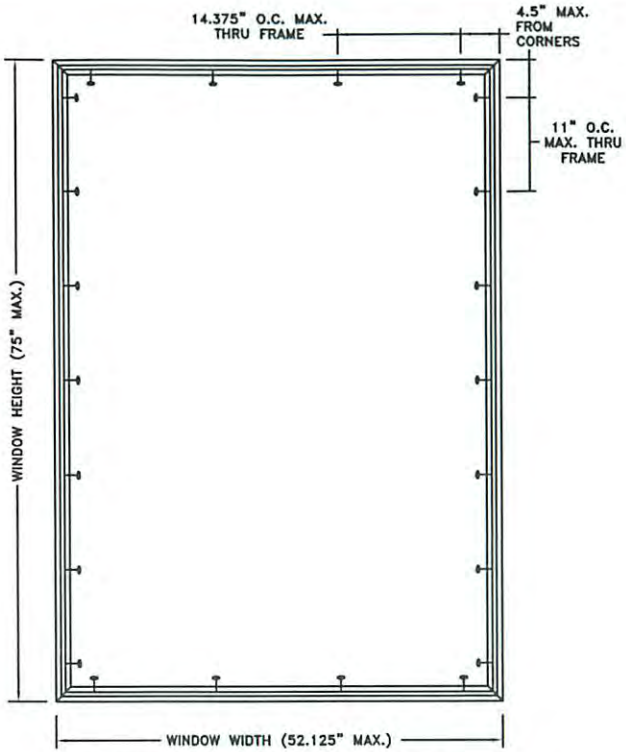

TYPICAL ELEVATION WITH FASTENER SPACING

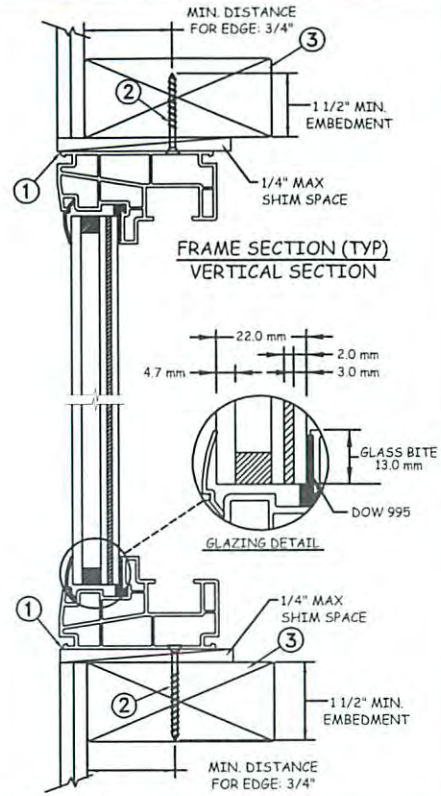

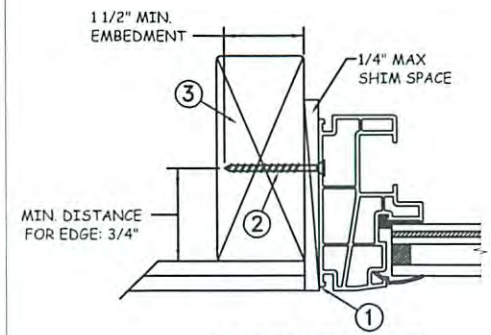

JAMB SECTION (TYP)
HORIZONTAL SECTION

Max Frame	DP RATING	IMPACT
52 1/8 x 75	+/-65	YES

Installation Notes:

1. Seal flange/frame to substrate.
2. Use #10 PH or greater fastener though the frame with sufficient length to penetrate a minimum of 1 1/2" into the wood framing. For 2X wood frame substrate (min. S.G. = 0.42).
3. Host structure (wood buck, masonry, steel) to be designed and anchored to properly transfer all loads to the structure. The host structure is the responsibility of the architect or engineer of record for the project of installation.

General Notes:

1. The product shown herein is designed, tested and manufactured to comply with the wind load criteria of the adopted International Building Code(IBC), the International Residential Code(IRC), the Texas Revisions and the industry requirement for the stated conditions.
2. All glazing shall conform to ASTM E1300.
3. At minimum, glazing shall be 4.7mm tempered - 17mm airspace - 3.0 annealed - 2.0mm SGP Interlayer - 3.0 annealed.
4. Use structural or composite shims where required.
5. Installation methods can be interchanged within the same opening.
6. An impact protective system is not required where wind borne debris protection is mandated by local building code.
7. Maximum sizes are buck sizes and do not include fin or flange.

This schedule addresses only the fasteners required to anchor the window to achieve the rated design pressure up to the size limitations noted. It is not intended as a guide to the installation process and does not address the sealing consideration that may arise in different wall conditions. For the complete installation procedure, see the instructions packaged with the window or go to www.jeld-wen.com/resources/installation.

DISCLAIMER:
This drawing and its contents are confidential and are not to be reproduced or copied in whole or in part or used or disclosed to others except as authorized by JELD-WEN Inc.

STATE OF TEXAS
ALEXIS SPYROU
102957
LICENSED
PROFESSIONAL ENGINEER

3-6-14

ALEXIS SPYROU, P.E.
Texas P.E. No. 102957
398 East Dania Beach Blvd., Suite 338
Dania Beach, FL 33004

PROJECT ENGINEER: --	DATE: 02/03/2014	JELD-WEN 3737 Lakeport Blvd Klamath Falls, OR. 97601 Phone: (541) 882-3451
DRAWN BY: D. Vezo	SCALE: NTS	
CHECKED BY: J. Kantola	TITLE: Premium Atlantic Vinyl Impact Fixed Window Through Frame Installation (52.125" x 75")	
APPROVED BY: --		
PART/PROJECT No.: D009461		
IDENTIFIER No. NCTL210-3908-1-TDI	PLANT NAME AND LOCATION:	CAD DWG. No.: / REV: 00 / SHEET 2 OF 4

MASONRY INSTALLATION

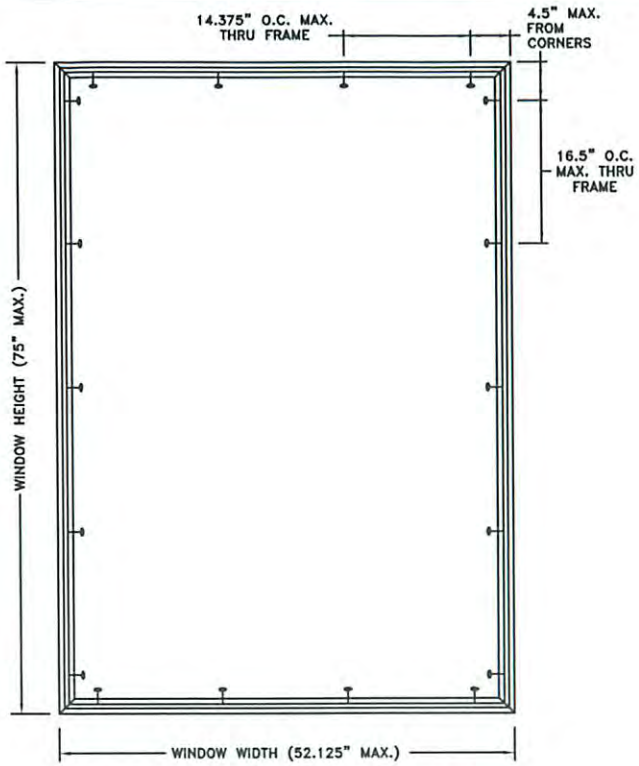

TYPICAL ELEVATION WITH FASTENER SPACING

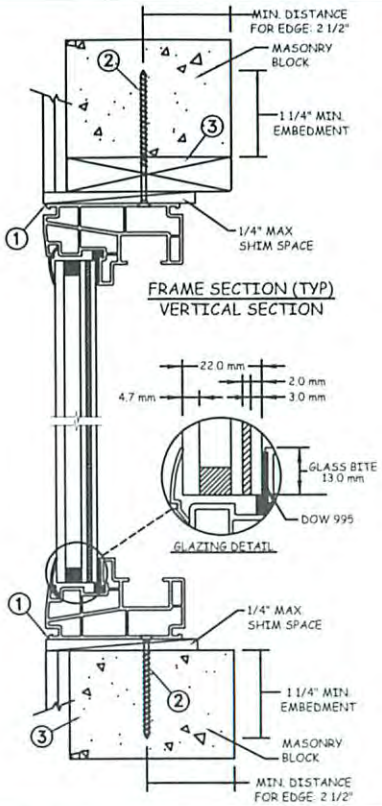

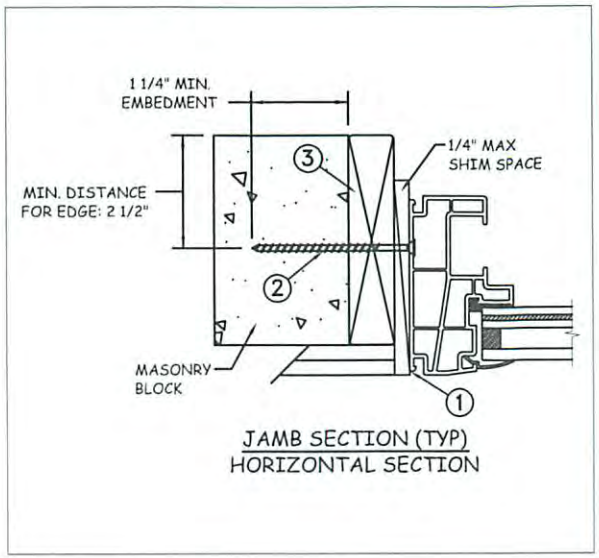

Max Frame	DP RATING	IMPACT
52 1/8 x 75	+/-65	YES

Installation Notes:

1. Seal flange/frame to substrate.
2. Use 3/16" Tapcon or equivalent fasteners through frame with sufficient length to penetrate a minimum of 1 1/4" into concrete or masonry at each location with a 2 1/2" min from edge distance. For concrete (min. f'c = 3000psi) or masonry substrate (CMU shall conform to ASTM C90).
3. Host structure (wood buck, masonry, steel) to be designed and anchored to properly transfer all loads to the structure. The host structure is the responsibility of the architect or engineer of record for the project of installation.

General Notes:

1. The product shown herein is designed, tested and manufactured to comply with the wind load criteria of the adopted International Building Code(IBC), the International Residential Code(IRC), the Texas Revisions and the industry requirement for the stated conditions.
2. All glazing shall conform to ASTM E1300.
3. At minimum, glazing shall be 4.7mm tempered - 17mm airspace - 3.0 annealed - 2.0mm SGP Interlayer - 3.0 annealed.
4. Use structural or composite shims where required.
5. Installation methods can be interchanged within the same opening.
6. An impact protective system is not required where wind borne debris protection is mandated by local building code.
7. Maximum sizes are buck sizes and do not include fin or flange.

This schedule addresses only the fasteners required to anchor the window to achieve the rated design pressure up to the size limitations noted. It is not intended as a guide to the installation process and does not address the sealing consideration that may arise in different wall conditions. For the complete installation procedure, see the instructions packaged with the window or go to www.jeld-wen.com/resources/installation.

DISCLAIMER:
This drawing and its contents are confidential and are not to be reproduced or copied in whole or in part or used or disclosed to others except as authorized by JELD-WEN Inc.

STATE OF TEXAS
ALEXIS SPYROU
102957
LICENSED
PROFESSIONAL ENGINEER

3674

ALEXIS SPYROU, P.E.
Texas P.E. No. 102957
398 East Dania Beach Blvd., Suite 338
Dania Beach, FL 33004

PROJECT ENGINEER: --	DATE: 01/30/2014	JELD-WEN 3737 Lakeport Blvd Klamath Falls, OR. 97601 Phone: (541) 882-3451
DRAWN BY: D. Vezo	SCALE: NTS	
CHECKED BY: J. Kantola	TITLE: Premium Atlantic Vinyl Impact Fixed Window Masonry Installation (52.125" x 75")	
APPROVED BY: --		
PART/PROJECT No.: D009461		
IDENTIFIER No. NCTL210-3908-1	PLANT NAME AND LOCATION: -TDI	CAD DWG. No.: / REV: 00 / SHEET 3 OF 4

STEEL INSTALLATION

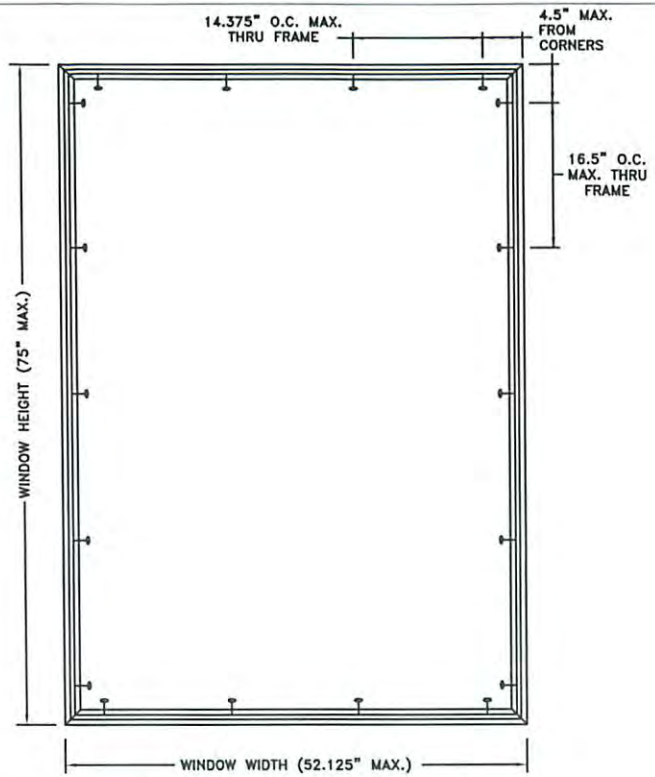

TYPICAL ELEVATION WITH FASTENER SPACING

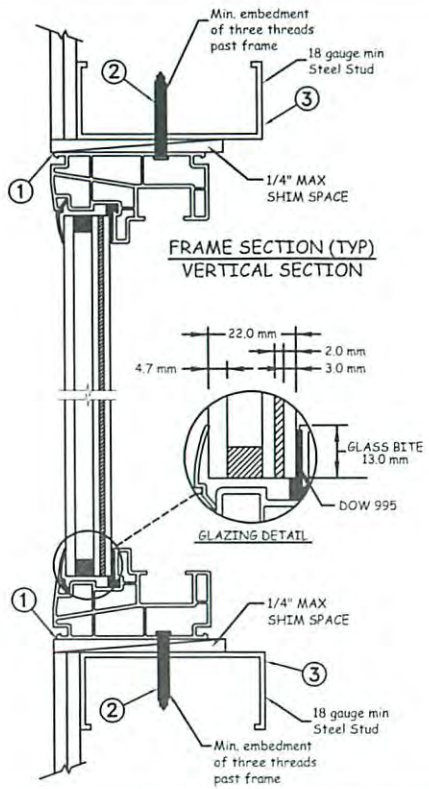

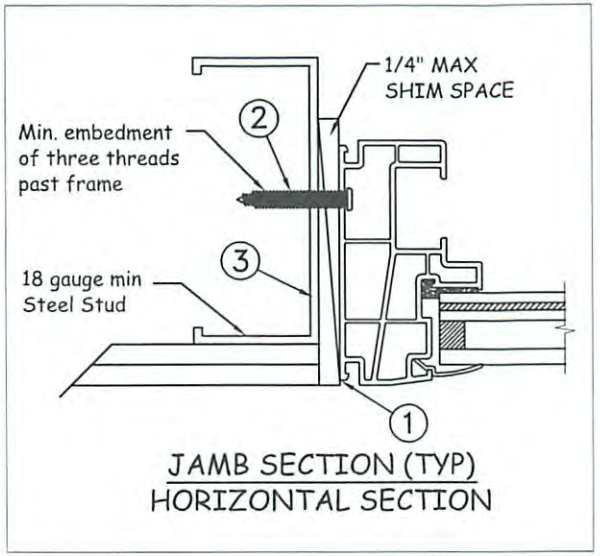

JAMB SECTION (TYP)
HORIZONTAL SECTION

Max Frame	DP RATING	IMPACT
52 1/8 x 75	+/-65	YES

Installation Notes:

1. Seal flange/frame to substrate.
2. For anchoring into metal framing use #10 TEK Self Tapping screws with sufficient length to achieve a minimum embedment of three threads past the frame thickness. Steel substrate min. 18ga., fy = 33 ksi.
3. Host structure (wood buck, masonry, steel) to be designed and anchored to properly transfer all loads to the structure. The host structure is the responsibility of the architect or engineer of record for the project of installation.

General Notes:

1. The product shown herein is designed, tested and manufactured to comply with the wind load criteria of the adopted International Building Code(IBC), the International Residential Code(IRC), the Texas Revisions and the industry requirement for the stated conditions.
2. All glazing shall conform to ASTM E1300.
3. At minimum, glazing shall be 4.7mm tempered - 17mm airspace - 3.0 annealed - 2.0mm SGP Interlayer - 3.0 annealed.
4. Use structural or composite shims where required.
5. Installation methods can be interchanged within the same opening.
6. An impact protective system is not required where wind borne debris protection is mandated by local building code.
7. Maximum sizes are buck sizes and do not include fin or flange.

This schedule addresses only the fasteners required to anchor the window to achieve the rated design pressure up to the size limitations noted. It is not intended as a guide to the installation process and does not address the sealing consideration that may arise in different wall conditions. For the complete installation procedure, see the instructions packaged with the window or go to www.jeld-wen.com/resources/installation.

DISCLAIMER:
This drawing and its contents are confidential and are not to be reproduced or copied in whole or in part or used or disclosed to others except as authorized by JELD-WEN Inc.

STATE OF TEXAS
ALEXIS SPYROU
102957
LICENSED
PROFESSIONAL ENGINEER
3614

ALEXIS SPYROU, P.E.
Texas P.E. No. 102957
398 East Dania Beach Blvd., Suite 338
Dania Beach, FL 33004

PROJECT ENGINEER: --	DATE: 01/30/2014	JELD-WEN 3737 Lakeport Blvd Klamath Falls, OR. 97601 Phone: (541) 882-3451
DRAWN BY: D. Vezo	SCALE: NTS	
CHECKED BY: J. Kantola	TITLE: Premium Atlantic Vinyl Impact Fixed Window Steel Installation (52.125" x 75")	
APPROVED BY: --		
PART/PROJECT No.: D009461		
IDENTIFIER No. NCTL210-3908-1	PLANT NAME AND LOCATION: -TDI	CAD DWG. No.: / REV: 00 / SHEET 4 OF 4