WINCORE™
WINDOWS & DOORS
250 Staunton Turnpike, Parkersburg, WV 26104

400/500 Series Vinyl Fixed Window w/ Nailing Fin "NON-IMPACT"

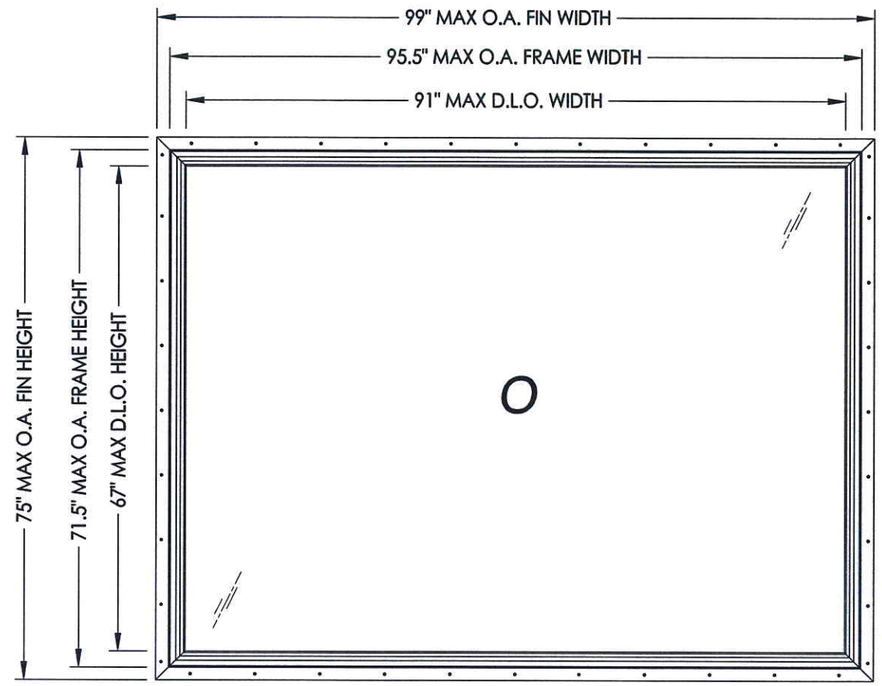

EVALUATED FOR USE IN THE STATE OF TEXAS

The Wincore Fixed Window described herein complies with the 2006 International Residential Code (IRC), Sections R301 & R613 and the 2006 International Building Code (IBC), Sections 1405.12, 1609, 1714.5, 2403 and 2404 (including Texas revisions) subject to the following conditions:

1. Anchors shall be as listed and spaced as shown in the details. Anchor embedment to base material shall be beyond wall dressing or stucco.
2. When used in areas requiring wind-borne debris protection this product is required to be protected with an impact resistant covering that complies with Section R301.2.1.2 of the IRC and Section 1609.1.2 of the IBC.
3. Allowable design pressure requirements must be equal to or less than the design pressure rating shown in the design pressure chart, sheet 1 of this drawing.
4. Conditions not covered by this drawing are subject to further engineering analysis.

TABLE OF CONTENTS

SHEET#	DESCRIPTION
1	Typical elevations, design pressures and general notes
2	Cross section & frame anchoring
3	Bill of materials, components and glazing details

MAX. FRAME DIMENSION	MAX. D.L.O. DIMENSION	GLASS TYPE	DESIGN PRESSURE (PSF)	
			POSITIVE	NEGATIVE
48.0" X 36.0"	43.5" X 31.5"	G4	+50.0	-50.0
45.0" X 45.0"	40.5" X 40.5"	G4	+50.0	-50.0
60.0" X 34.0"	55.5" X 29.5"	G4	+40.0	-40.0
72.0" X 28.0"	67.5" X 23.5"	G4	+35.0	-35.0
84.0" X 24.0"	79.5" X 19.5"	G4	+30.0	-30.0
52.0" X 52.0"	47.5" X 47.5"	G3	+50.0	-50.0
63.0" X 44.0"	58.5" X 39.5"	G3	+50.0	-50.0
72.0" X 49.0"	67.5" X 44.5"	G3	+40.0	-40.0

MAX. FRAME DIMENSION	MAX. D.L.O. DIMENSION	GLASS TYPE	DESIGN PRESSURE (PSF)	
			POSITIVE	NEGATIVE
60.0" X 59.0"	55.5" X 54.5"	G3	+35.0	-35.0
84.0" X 42.0"	79.5" X 37.5"	G3	+35.0	-35.0
96.0" X 38.0"	91.5" X 33.5"	G2	+50.0	-50.0
84.0" X 58.0"	79.5" X 53.5"	G2	+50.0	-50.0
96.0" X 58.0"	91.5" X 53.5"	G2	+45.0	-45.0
77.0" X 72.0"	72.5" X 67.5"	G2	+45.0	-45.0
84.0" X 66.0"	79.5" X 61.5"	G2	+35.0	-35.0
95.5" X 71.5"	91.0" X 67.0"	G1	+35.0	-35.0

STATE OF TEXAS
LYNDON F. SCHMIDT
104123
LICENSED PROFESSIONAL ENGINEER
9-3-14

Documents Prepared By: Lyndon F. Schmidt, P.E.
TEXAS P.E. #104123
RW BUILDING CONSULTANTS, INC.
P.O. Box 230 Valrico FL. 33595
Phone No.: 813.659.9197
TEXAS BOARD OF PROFESSIONAL ENGINEERS
CERTIFICATE OF REGISTRATION # F-11852

PRODUCT: 400/500 SERIES

PART OR ASSEMBLY: TYPICAL ELEVATION, DESIGN PRESSURES & GENERAL NOTES

REVISIONS

NO.	DATE	BY

DATE: 9/2/14
SCALE: N.T.S.
DWG. BY: JK
CHK. BY: LFS
DRAWING NO.: TX-4457
SHEET 1 OF 3

© 2014 R.W. BUILDING CONSULTANTS INC.

R:\A - Projects\Project Folders\Proj 1701 - 1800\PF 1769\D. RWBC Drawings\TX-4457.dwg, TX-4457

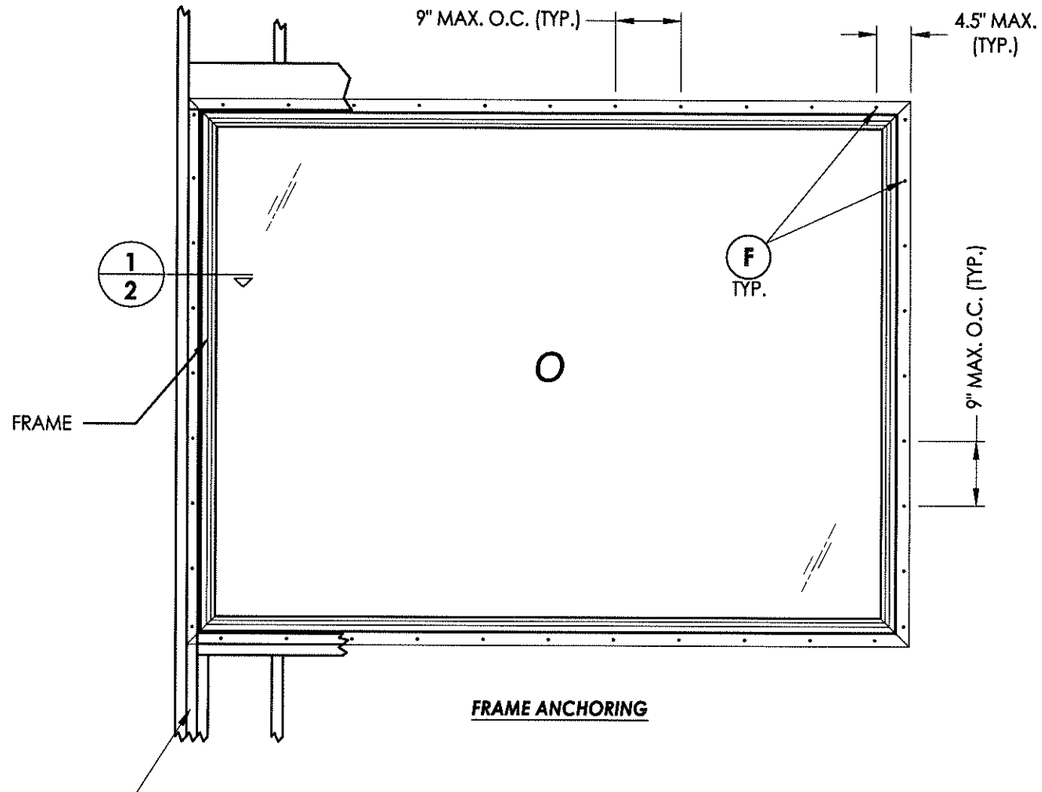

FRAME ANCHORING

2x framing to be designed by the engineer or architect of record based on wind loads and the cladding being used (typ.).

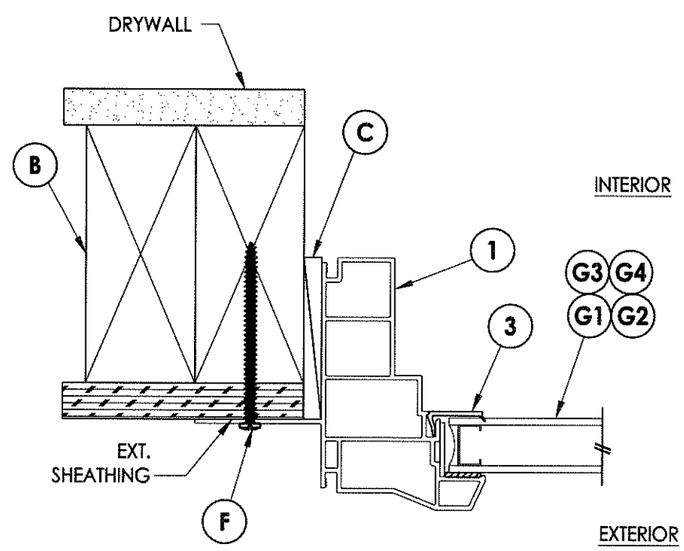

1/2 **CROSS SECTION**
Shown w/ 400 Series Frame

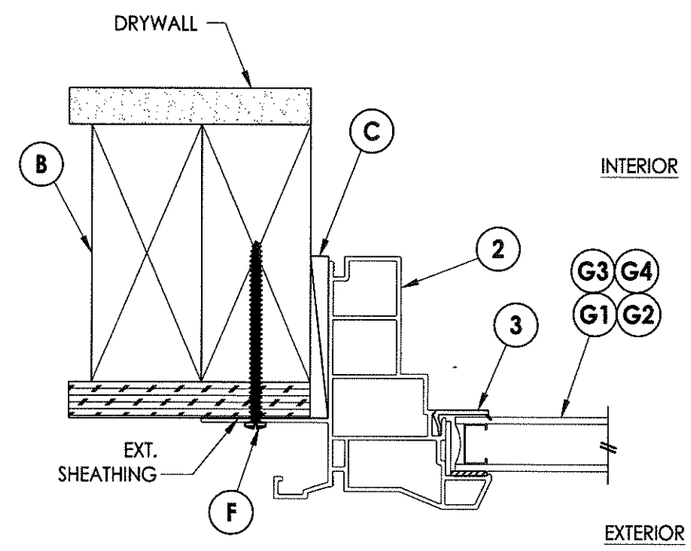

1/2 **CROSS SECTION**
Shown w/ 500 Series Frame w/ J-Channel

STATE OF TEXAS
LYNDON F. SCHMIDT
104123
LICENSED PROFESSIONAL ENGINEER
9.3.14

Documents Prepared By: Lyndon F. Schmidt, P.E.
TEXAS P.E. #104123

RW BUILDING CONSULTANTS, INC.
P.O. Box 230 Valrico FL. 33595
Phone No.: 813.659.9197

TEXAS BOARD OF PROFESSIONAL ENGINEERS
CERTIFICATE OF REGISTRATION # F-11852

PRODUCT: 400/500 SERIES

PART OR ASSEMBLY: HORIZONTAL CROSS SECTIONS

NO.	DATE	BY

REVISIONS

DATE: 9/2/14
SCALE: N.T.S.
DWG. BY: JK
CHK. BY: LFS
DRAWING NO.: TX-4457
SHEET 2 OF 3

© 2014 R.W. BUILDING CONSULTANTS INC.

R:\A - Projects\Project Folders\Proj 1701 - 1800\PF 1769\D. RWBC Drawings\TX-4457.dwg, 7.2

BILL OF MATERIALS		
ITEM #	DESCRIPTION	MATERIAL
B	2X FRAMING (SG >= 0.42)	WOOD
C	1/4" MAX. SHIM SPACE	-
F	#8 X 2-1/2" PPH WOOD SCREW	STEEL
1	FRAME (P15401E)*	PVC
2	FRAME (PI5401)*	PVC
3	GLAZING BEAD (22841)*	PVC

* THE APPROVED WHITE RIGID PVC EXTERIOR EXTRUSIONS FOR WINDOWS ARE TO BE PRODUCED BY EXTRUDERS LICENSEES IN "AAMA CERTIFICATION PROGRAMS FOR RIGID PVC EXTRUSIONS".

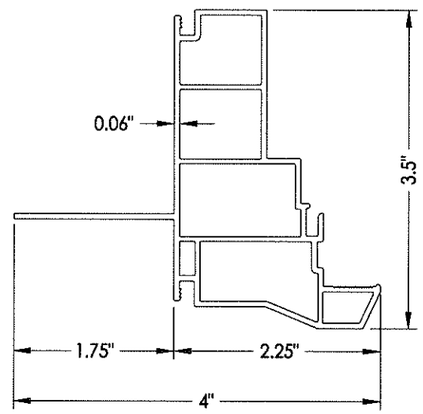

1 FRAME (400 Series)

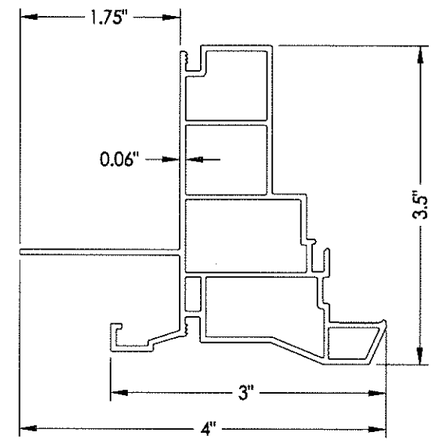

2 FRAME (500 Series w/ J-Channel)

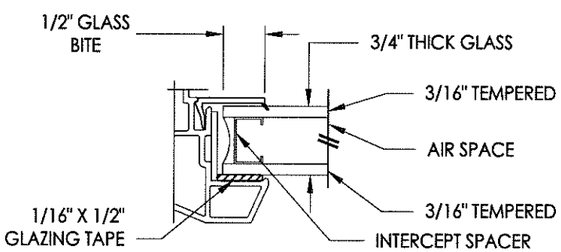

G1 GLAZING DETAIL

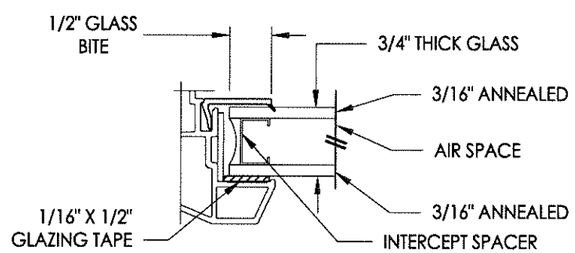

G2 GLAZING DETAIL

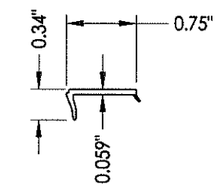

3 GLAZING BEAD

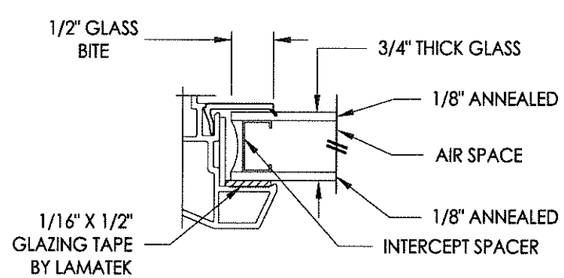

G3 GLAZING DETAIL

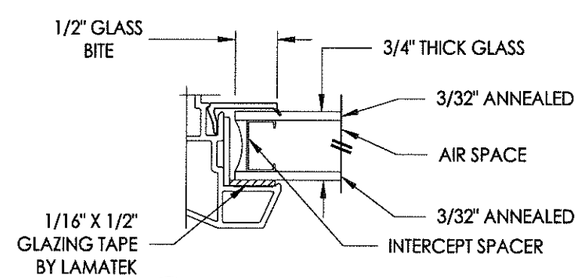

G4 GLAZING DETAIL

Documents Prepared By: Lyndon F. Schmidt, P.E. TEXAS P.E. #104123
RW BUILDING CONSULTANTS, INC.
P.O. Box 230 Valrico FL 33595
Phone No.: 813.659.9197
TEXAS BOARD OF PROFESSIONAL ENGINEERS CERTIFICATE OF REGISTRATION # F-11852

STATE OF TEXAS LYNDON F. SCHMIDT 104123 LICENSED PROFESSIONAL ENGINEER

PRODUCT: 400/500 SERIES

PART OR ASSEMBLY: BILL OF MATERIALS, COMPONENTS AND GLAZING DETAILS

NO.	DATE	REVISIONS	BY

DATE: 9/2/14
SCALE: N.T.S.
DWG. BY: JK
CHK. BY: LFS
DRAWING NO.: TX-4457
SHEET 3 OF 3

© 2014 R.W. BUILDING CONSULTANTS INC.

R:\A - Projects\Project Folders\Proj 1701 - 1800\PF 1769\D. RWBC Drawings\TX-4457.dwg, 7.3