Alside BECAUSE LIFE IS FOR LIVING®

3773 STATE ROAD, CUYAHOGA FALLS, OH 44223

MODEL 03A2 ST HORIZONTAL SLIDER

"NON-IMPACT"

ALSO DISTRIBUTED UNDER THE FOLLOWING TRADE NAMES:

ASSOCIATED MATERIALS, INC.
GENTEK BUILDING PRODUCTS
REVERE BUILDING PRODUCTS

EVALUATED FOR USE IN THE STATE OF TEXAS

The Horizontal Sliding Window described herein complies with the 2006 International Residential Code (IRC), Sections R301 & R613 and the 2006 International Building Code (IBC), Sections 1405.12, 1609, 1714.5, 2403 and 2404 (including Texas revisions) subject to the following conditions:

1. Anchors shall be as listed and spaced as shown in the details. Anchor embedment to base material shall be beyond wall dressing or stucco.
2. When used in areas requiring wind-borne debris protection this product is required to be protected with an impact resistant covering that complies with Section R301.2.1.2 of the IRC and Section 1609.1.2 of the IBC.
3. Allowable design pressure requirements must be equal to or less than the design pressure rating shown in the design pressure chart, sheet 1 of this drawing.
4. Conditions not covered by this drawing are subject to further engineering analysis.

TABLE OF CONTENTS

SHEET#	DESCRIPTION
1	Typical elevations, design pressures & general notes
2	Frame anchoring & cross sections
3	Bill of materials, glazing detail and components

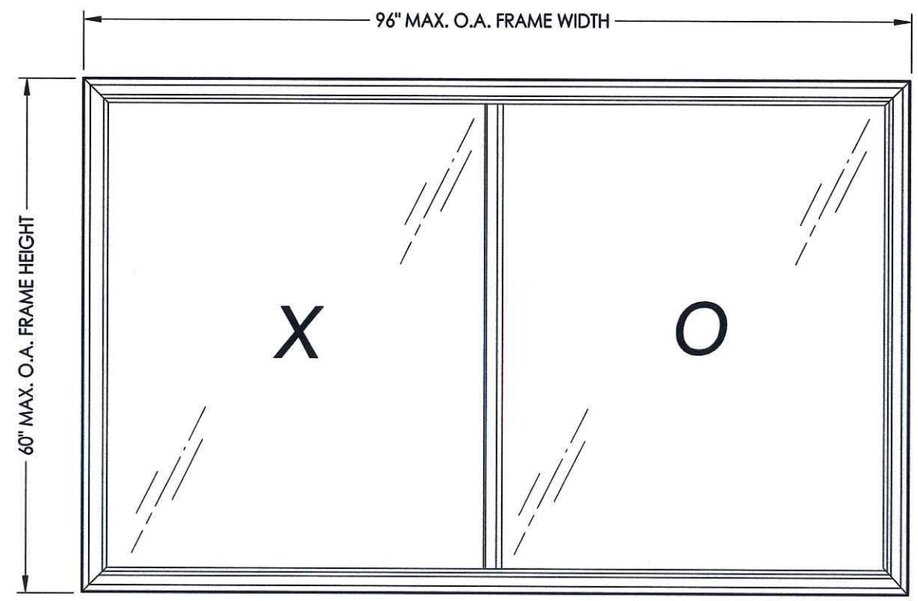

OVERALL FRAME DIMENSION	MAX. D.L.O. DIMENSION	GLASS TYPE	DESIGN PRESSURE (PSF)	
			POS.	NEG.
96.0" x 60.0"	44.38" x 54.25"	G1	+25.0	-25.0
72.0" x 56.0"	32.38" x 50.25"		+35.0	-35.0

STATE OF TEXAS LYNDON F. SCHMIDT 104123 LICENSED PROFESSIONAL ENGINEER

Documents Prepared By: Lyndon F. Schmidt, P.E. TEXAS P.E. #104123

RW BUILDING CONSULTANTS, INC.
P.O. Box 230 Valrico FL 33595
Phone No.: 813.659.9197

TEXAS BOARD OF PROFESSIONAL ENGINEERS CERTIFICATE OF REGISTRATION # F-11852

PRODUCT: HORIZONTAL SLIDER

PART OR ASSEMBLY: TYPICAL ELEVATION, DESIGN PRESSURES & GENERAL NOTES

REVISIONS

NO.	DATE	BY

DATE: 3/27/14
SCALE: N.T.S.
DWG. BY: JK
CHK. BY: LFS
DRAWING NO.: TX-4447
SHEET 1 OF 3

© 2014 R.W. BUILDING CONSULTANTS INC.

\\2012ess\rwbc\A - Projects\Project Folders\Proj 1301-1400\pf 1316\Texas 2014\TX-4447.dwg, TX-4447

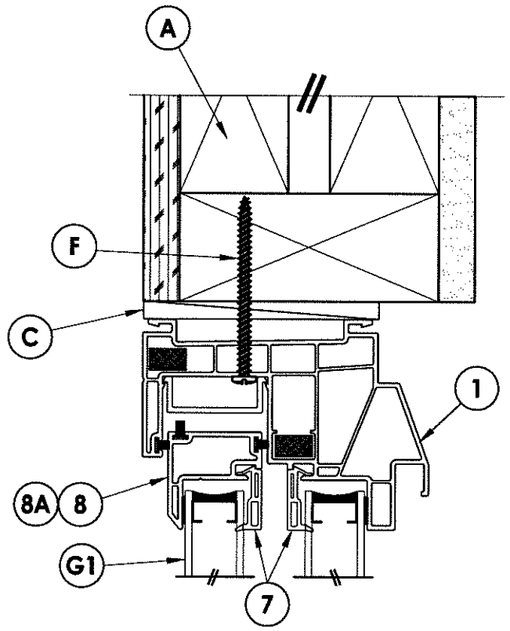

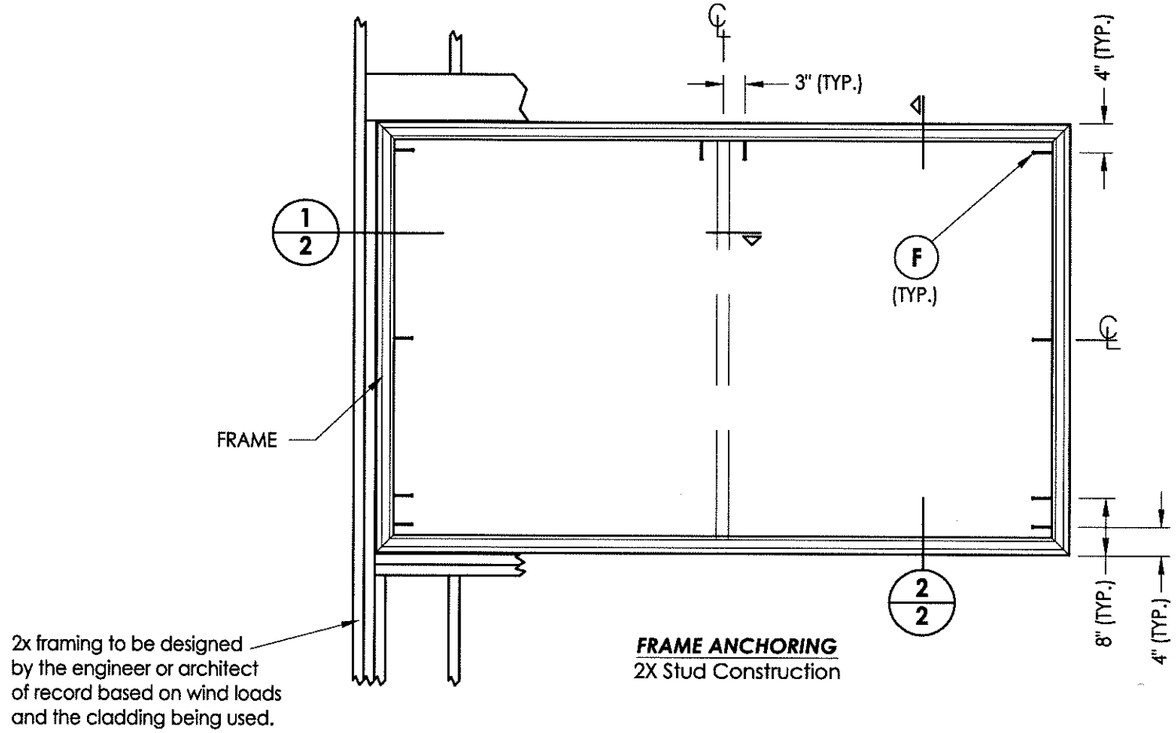

FRAME ANCHORING
2X Stud Construction

NOTE:
1. Locks located 10" from the top and bottom of sash (2 total).

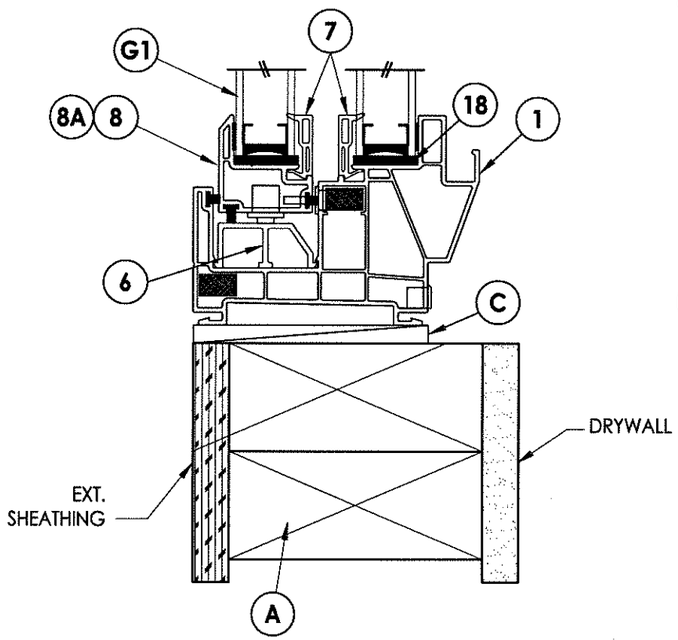

2/2 **VERTICAL CROSS SECTION**

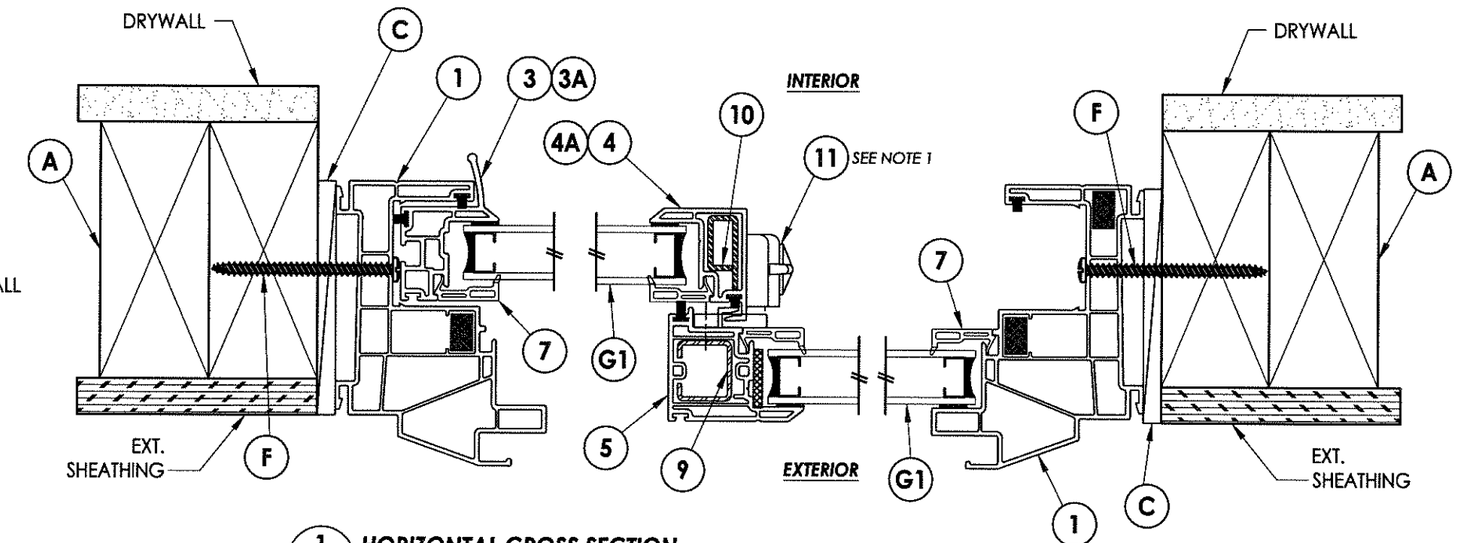

1/2 **HORIZONTAL CROSS SECTION**

Documents Prepared By: Lyndon F. Schmidt, P.E. TEXAS P.E. #104123

RW BUILDING CONSULTANTS, INC.
P.O. Box 230 Valrico FL. 33595
Phone No.: 813.659.9197

TEXAS BOARD OF PROFESSIONAL ENGINEERS CERTIFICATE OF REGISTRATION # F-11852

PRODUCT: HORIZONTAL SLIDER

PART OR ASSEMBLY: FRAME ANCHORING & CROSS SECTIONS

NO.	DATE	REVISIONS	BY

DATE: 3/27/14
SCALE: N.T.S.
DWG. BY: JK
CHK. BY: LFS
DRAWING NO.: TX-4447
SHEET 2 OF 3

© 2014 R.W. BUILDING CONSULTANTS INC.

\\2012ess\rwbc\A - Projects\Project Folders\Proj 1301-1400\pf 1316\Texas 2014\TX-4447.dwg, 1-2

BILL OF MATERIALS

ITEM #	DESCRIPTION	MATERIAL
A	2X FRAMING (SG >= 0.42)	WOOD
C	1/4" MAX. SHIM SPACE	-
F	#8 X 2-1/2" PPH SMS	STEEL
1	EXTRUDED VINYL FRAME *	RIGID PVC
3	EXTRUDED VINYL SASH PULL STILE (SMALL) *	RIGID PVC
3A	EXTRUDED VINYL SASH PULL STILE (MEDIUM) *	RIGID PVC
4	EXTRUDED VINYL LOCK STILE (SMALL) *	RIGID PVC
4A	EXTRUDED VINYL LOCK STILE (MEDIUM) *	RIGID PVC
5	EXTRUDED VINYL ASTRAGAL *	RIGID PVC
6	EXTRUDED VINYL SILL TRACK *	RIGID PVC
7	EXTRUDED VINYL GLAZING BEAD *	RIGID PVC
8	EXTRUDED VINYL TOP AND BOTTOM RAIL (SMALL) *	RIGID PVC
8A	EXTRUDED VINYL TOP AND BOTTOM RAIL (MEDIUM) *	RIGID PVC
9	SASH REINFORCEMENT	STEEL
10	SASH REINFORCEMENT	STEEL
11	LOCK	-
18	SETTING BLOCK	-

*THE APPROVED WHITE RIGID PVC EXTERIOR EXTRUSIONS FOR WINDOWS ARE TO BE PRODUCED BY EXTRUDERS LICENSEES IN "AAMA CERTIFICATION PROGRAMS FOR RIGID PVC EXTRUSIONS."

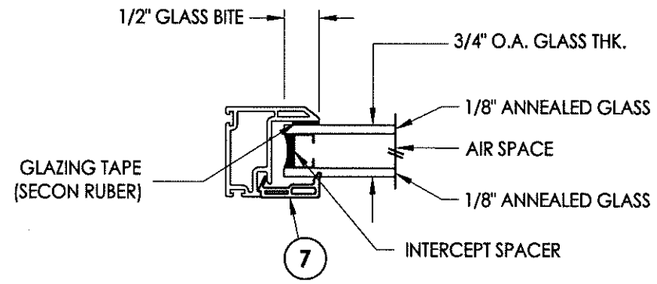

G1 GLAZING DETAIL

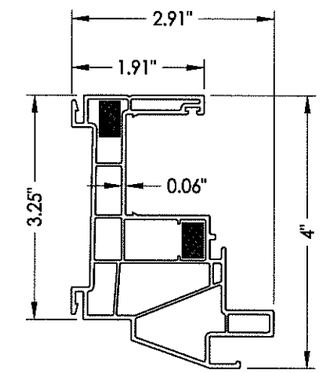

1 FRAME

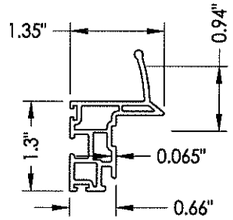

3 SASH PULL STILE
Small

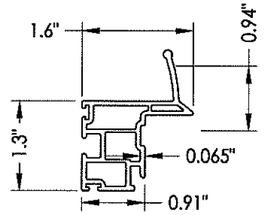

3A SASH PULL STILE
Medium

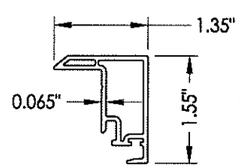

4 LOCK STILE
Small

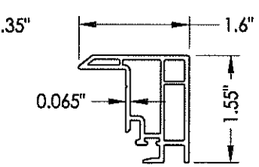

4A LOCK STILE
Medium

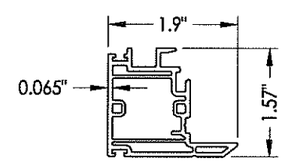

5 ASTRAGAL

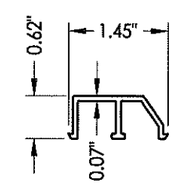

6 SILL TRACK

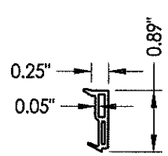

7 GLAZING BEAD

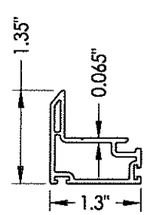

8 TOP AND BOTTOM RAIL
Small

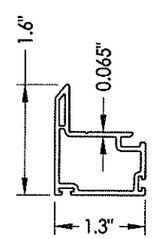

8A TOP AND BOTTOM RAIL
Medium

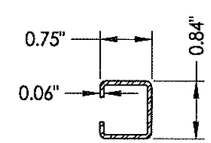

9 REINFORCEMENT

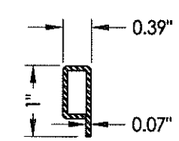

10 REINFORCEMENT

Documents Prepared By: Lyndon F. Schmidt, P.E.
TEXAS P.E. #104123

RW BUILDING CONSULTANTS, INC.
P.O. Box 230 Valrico FL 33595
Phone No.: 813.659.9197

TEXAS BOARD OF PROFESSIONAL ENGINEERS
CERTIFICATE OF REGISTRATION # F-11852

STATE OF TEXAS · LYNDON F. SCHMIDT · 104123 · LICENSED · PROFESSIONAL ENGINEER

PRODUCT: HORIZONTAL SLIDER

PART OR ASSEMBLY: BILL OF MATERIALS, GLAZING DETAILS & COMPONENTS

NO.	DATE	REVISIONS	BY

DATE: 3/27/14
SCALE: N.T.S.
DWG. BY: JK
CHK. BY: LFS
DRAWING NO.: TX-4447
SHEET 3 OF 3

© 2014 R.W. BUILDING CONSULTANTS INC.

\\2012ess\rwbc\A - Projects\Project Folders\Proj 1301-1400\pf 1316\Texas 2014\TX-4447.dwg, 1-3