WINCORE™
WINDOWS & DOORS
250 Staunton Turnpike, Parkersburg, WV 26104

400 SERIES
Vinyl Horizontal Sliding Window w/ Nailing Fin
"NON-IMPACT"

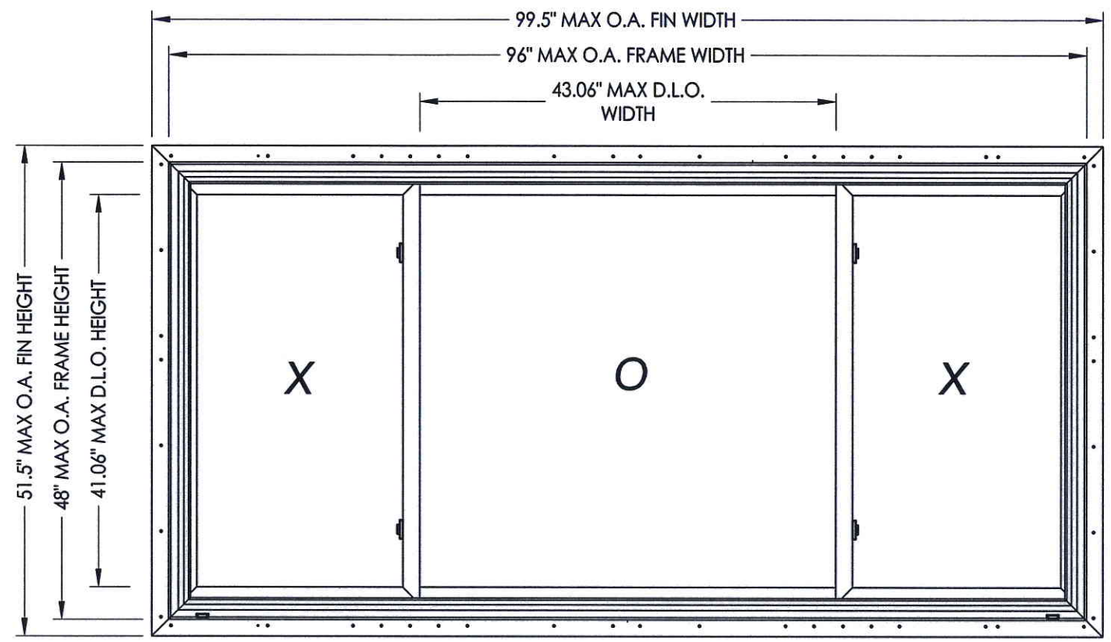

EVALUATED FOR USE IN THE STATE OF TEXAS

The Wincore Horizontal Sliding Window described herein complies with the 2006 International Residential Code (IRC), Sections R301 & R613 and the 2006 International Building Code (IBC), Sections 1405.12, 1609, 1714.5, 2403 and 2404 (including Texas revisions) subject to the following conditions:

1. Anchors shall be as listed and spaced as shown in the details. Anchor embedment to base material shall be beyond wall dressing or stucco.
2. When used in areas requiring wind-borne debris protection this product is required to be protected with an impact resistant covering that complies with Section R301.2.1.2 of the IRC and Section 1609.1.2 of the IBC.
3. Allowable design pressure requirements must be equal to or less than the design pressure rating shown in the design pressure chart, sheet 1 of this drawing.
4. Conditions not covered by this drawing are subject to further engineering analysis.

MAX. FIN DIMENSION	MAX. FRAME DIMENSION	MAX. D.L.O. DIMENSION	GLASS TYPE	DESIGN PRESSURE (PSF)	
				POSITIVE	NEGATIVE
99.5" X 51.5"	96.0" X 48.0"	43.06" X 41.06"	G1	+40.0	-40.0

TABLE OF CONTENTS

SHEET#	DESCRIPTION
1	Typical elevations, design pressures and general notes
2	Horizontal & vertical cross sections & frame anchoring
3	Bill of materials, components & glazing details

STATE OF TEXAS
LYNDON F. SCHMIDT
104123
LICENSED PROFESSIONAL ENGINEER
11.18.13

Documents Prepared By: Lyndon F. Schmidt, P.E.
TEXAS P.E. #104123
RW BUILDING CONSULTANTS, INC.
P.O. Box 230 Valrico FL. 33595
Phone No.: 813.659.9197
TEXAS BOARD OF PROFESSIONAL ENGINEERS
CERTIFICATE OF REGISTRATION # F-11852

PRODUCT: 400 SERIES
PART OR ASSEMBLY: TYPICAL ELEVATION, DESIGN PRESSURES & GENERAL NOTES

NO.	DATE	BY

REVISIONS

DATE: 11/4/13
SCALE: N.T.S.
DWG. BY: JK
CHK. BY: LFS
DRAWING NO.: TX-4401
SHEET 1 OF 3

© 2013 R.W. BUILDING CONSULTANTS INC.

R:\A - Projects\Project Folders\Proj 1601 - 1700\PF 1679\Horizontal Slider\TX-2013\TX-4400-02.dwg, TX-4401

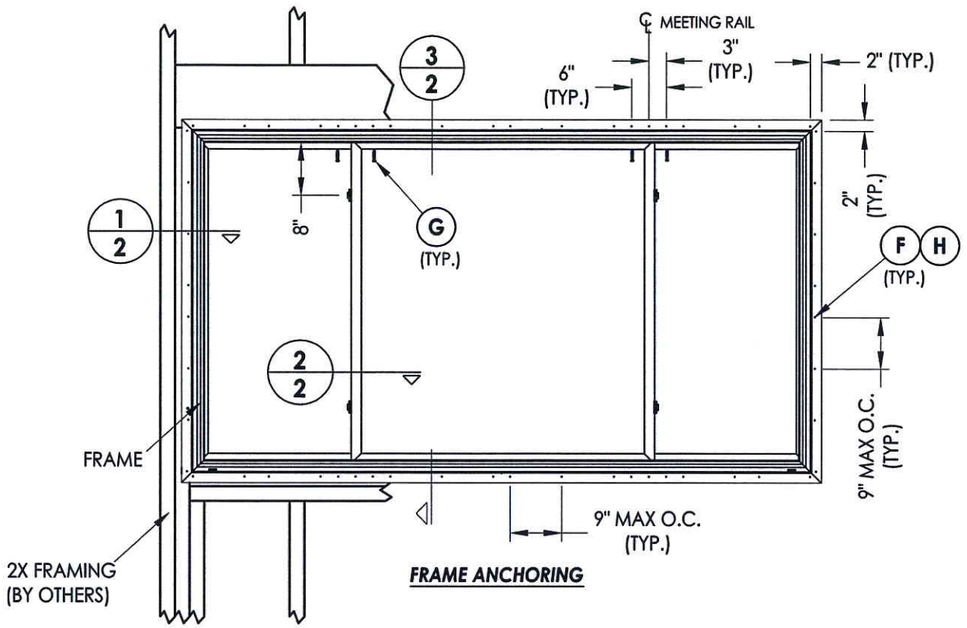

FRAME ANCHORING

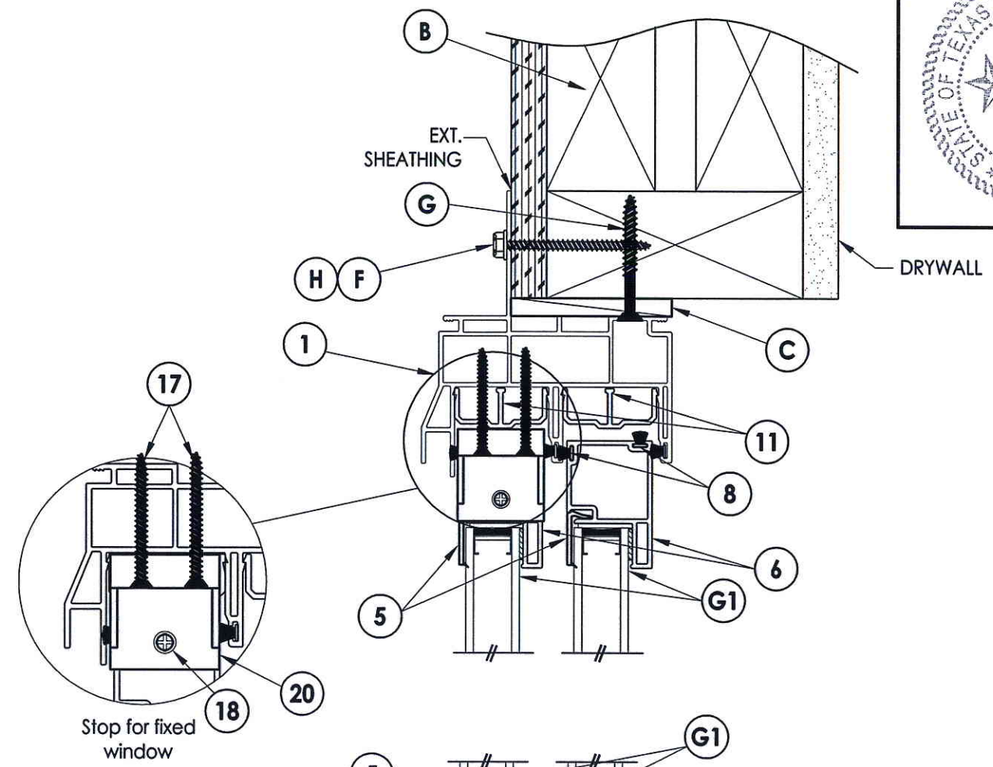

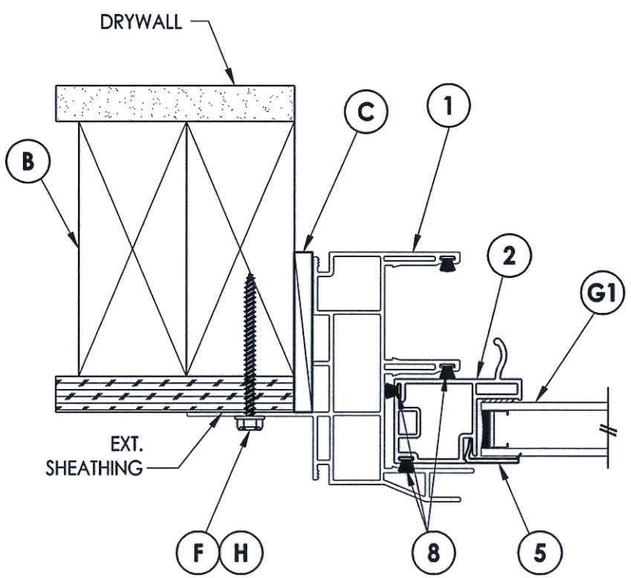

1/2 HORIZONTAL CROSS SECTION

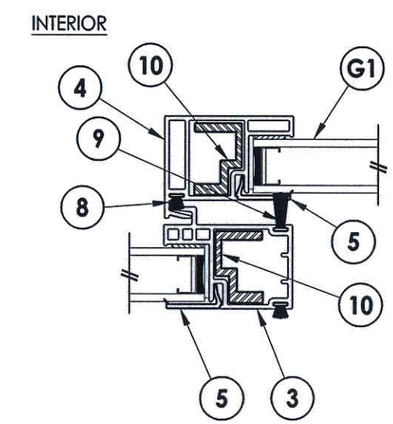

2/2 HORIZONTAL CROSS SECTION

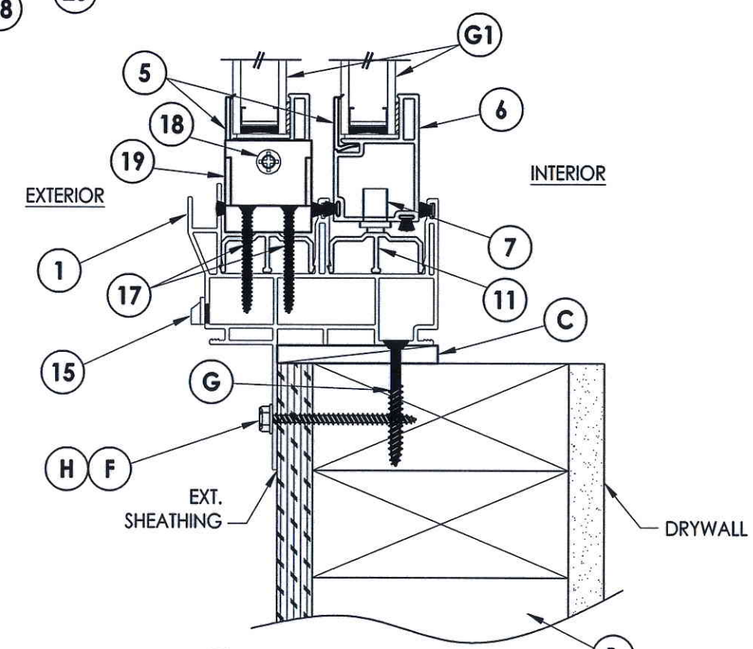

3/2 HORIZONTAL CROSS SECTION

STATE OF TEXAS
LYNDON F. SCHMIDT
104123
LICENSED PROFESSIONAL ENGINEER
11-18-13

Documents Prepared By: Lyndon F. Schmidt, P.E.
TEXAS P.E. #104123

R.W. BUILDING CONSULTANTS, INC.
P.O. Box 230 Valrico FL. 33595
Phone No.: 813.659.9197

TEXAS BOARD OF PROFESSIONAL ENGINEERS
CERTIFICATE OF REGISTRATION # F-11852

PRODUCT: 400 SERIES

PART OR ASSEMBLY: HORIZONTAL & VERTICAL CROSS SECTIONS & FRAME ANCHORING

NO.	DATE	REVISIONS	BY

DATE: 11/4/13
SCALE: N.T.S.
DWG. BY: JK
CHK. BY: LFS
DRAWING NO.: TX-4401
SHEET 2 OF 3

© 2013 R.W. BUILDING CONSULTANTS INC.

R:\A - Projects\Project Folders\Proj 1601 - 1700\PF 1679\Horizontal Slider\TX-2013\TX4400-02.dwg, 1.2

BILL OF MATERIALS		
ITEM #	DESCRIPTION	MATERIAL
B	2X FRAMING (SG >= 0.42)	WOOD
C	1/4" MAX. SHIM SPACE	-
F	#8 X 2" HWH SMS (1-3/8" MIN. EMBEDMENT)	STEEL
G	#10 X 1-1/2" PFH WOOD SCREW (1-3/8" MIN. EMBEDMENT)	STEEL
H	#8 X 2" PPH SMS (1-3/8" MIN. EMBEDMENT)	STEEL
1	FRAME (400 SERIES)*	PVC
2	SLIDER PULL STILE*	PVC
3	LOCK STILE*	PVC
4	KEEPER STILE*	PVC
5	GLAZING BEAD*	PVC
6	SLIDER COMMON RAIL*	PVC
7	METAL ROLLERS w/ PLASTIC HOUSING	-
8	WEATHERSTRIP (0.230")	-
9	WEATHERSTRIP (0.380")	-
10	REINFORCEMENT	ALUM
11	SILL TRACK*	PVC
15	WEEPHOLE CAP*	PVC
17	#8 X 1-1/4" PFH SMS	STEEL
18	#8 X 3/4" PFH WOOD SCREW	STEEL
19	LOWER FLANKER STOP	NYLON
20	UPPER FLANKER STOP	NYLON

* THE APPROVED WHITE RIGID PVC EXTERIOR EXTRUSIONS FOR WINDOWS ARE TO BE PRODUCED BY EXTRUDERS LICENSEES IN "AAMA CERTIFICATION PROGRAMS FOR RIGID PVC EXTRUSIONS".

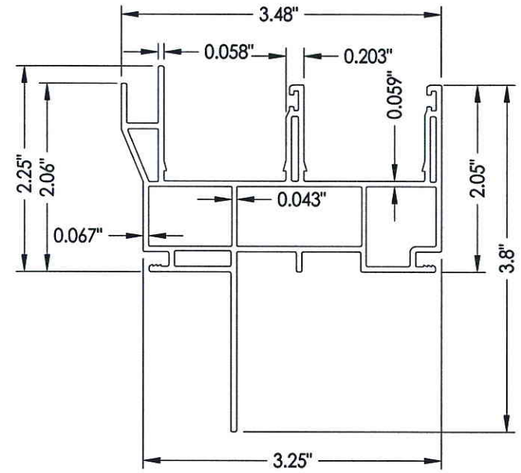

1 FRAME 400 SERIES

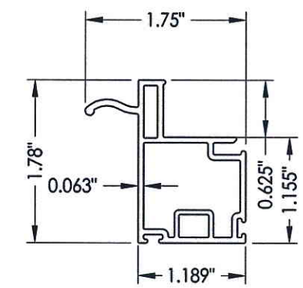

2 SLIDER PULL STILE

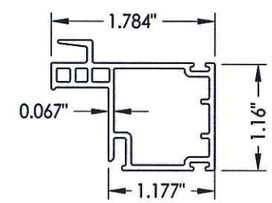

3 LOCK STILE

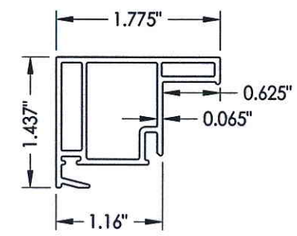

4 KEEPER STILE

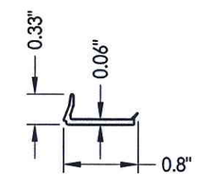

5 GLAZING BEAD

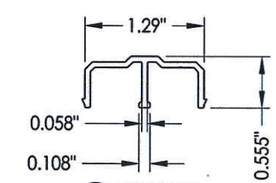

11 SILL TRACK

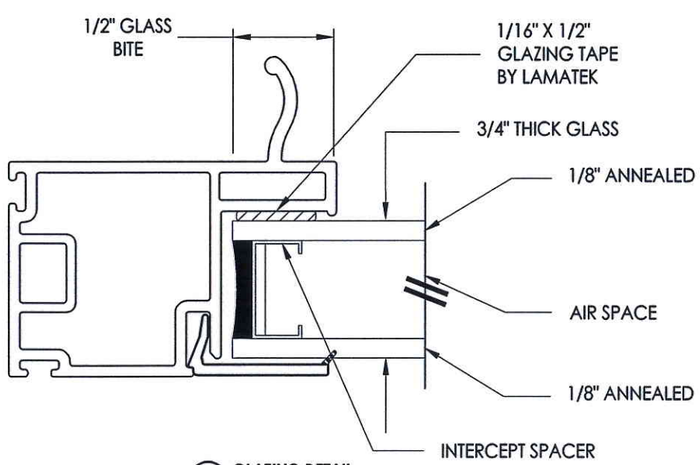

G1 GLAZING DETAIL

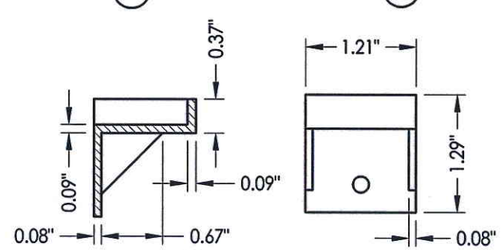

19 LOWER FLANKER STOP

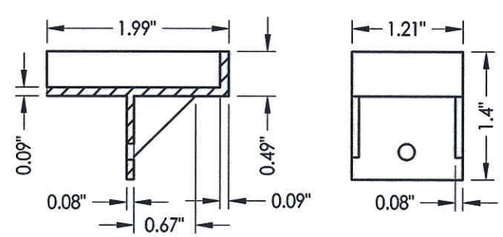

20 UPPER FLANKER STOP

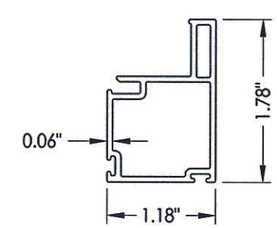

6 SLIDER COMMON RAIL

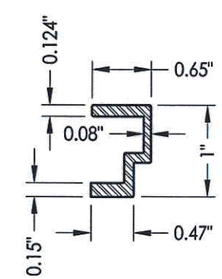

10 REINFORCEMENT

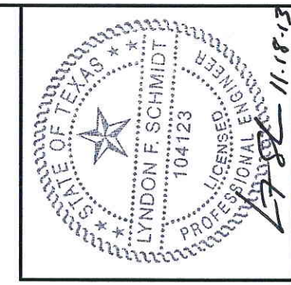

Documents Prepared By: Lyndon F. Schmidt, P.E.
TEXAS P.E. #104123

RW BUILDING CONSULTANTS, INC.
P.O. Box 230 Valrico FL. 33595
Phone No.: 813.659.9197

TEXAS BOARD OF PROFESSIONAL ENGINEERS
CERTIFICATE OF REGISTRATION # F-11852

PRODUCT: 400 SERIES

PART OR ASSEMBLY: BILL OF MATERIALS, COMPONENTS & GLAZING DETAILS

NO.	DATE	REVISIONS	BY

DATE: 11/4/13
SCALE: N.T.S.
DWG. BY: JK
CHK. BY: LFS
DRAWING NO.: TX-4401
SHEET 3 OF 3

© 2013 R.W. BUILDING CONSULTANTS INC.

R:\A - Projects\Project Folders\Proj 1601 - 1700\PF 1679\Horizontal Slider\TX-2013\TX-4400-02.dwg, 1.3