REVISIONS			
REV	DESCRIPTION	DATE	APPROVED

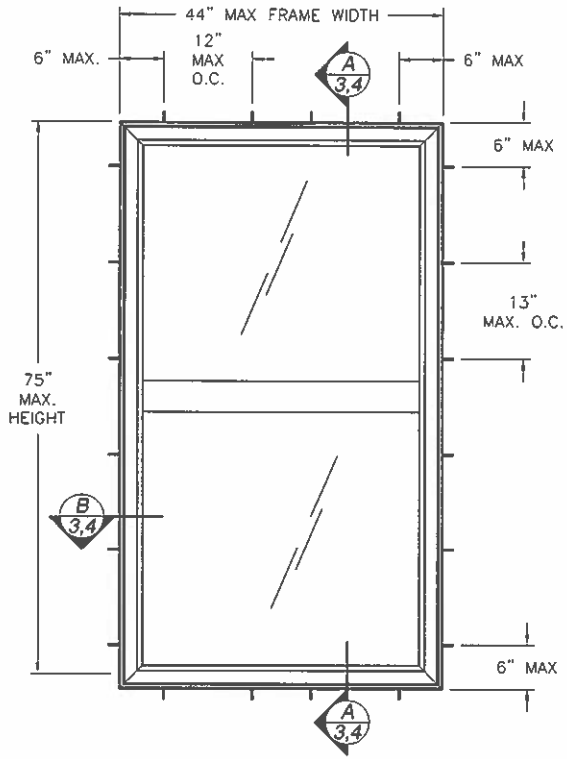

WINDQUEST V707 NON-IMPACT HP SINGLE HUNG

EXTERIOR VIEW FRAME FLUSH INSTALLATION

DESIGN PRESSURE RATING	IMPACT RATING
±70PSF	NONE

NOTES:

1. THE PRODUCT SHOWN HEREIN IS DESIGNED AND MANUFACTURED TO COMPLY WITH REQUIREMENTS OF THE 2006 IBC AND 2006 IRC WITH STATE OF TEXAS MODIFICATIONS.
2. WOOD FRAMING AND MASONRY OPENING TO BE DESIGNED AND ANCHORED TO PROPERLY TRANSFER ALL LOADS TO STRUCTURE. FRAMING AND MASONRY OPENING IS THE RESPONSIBILITY OF THE ARCHITECT OR ENGINEER OF RECORD.
3. 1X BUCK OVER MASONRY/CONCRETE IS OPTIONAL. WHERE 1X BUCK IS NOT USED DISSIMILAR MATERIALS MUST BE SEPARATED WITH APPROVED COATING OR MEMBRANE. SELECTION OF COATING OR MEMBRANE IS THE RESPONSIBILITY OF THE ARCHITECT OR ENGINEER OF RECORD.
4. ALLOWABLE STRESS INCREASE OF 1/3 WAS NOT USED IN THE DESIGN OF THE PRODUCT SHOWN HEREIN. WIND LOAD DURATION FACTOR Cd=1.6 WAS USED FOR WOOD ANCHOR CALCULATIONS.
5. FRAME MATERIAL: EXTRUDED RIGID PVC.
6. UNITS MUST BE GLAZED PER ASTM E1300-04.
7. APPROVED IMPACT PROTECTIVE SYSTEM <u>IS REQUIRED</u> FOR THIS PRODUCT IN WIND BORNE DEBRIS REGIONS.
8. SHIM AS REQUIRED AT EACH INSTALLATION ANCHOR WITH LOAD BEARING SHIM. SHIM WHERE SPACE OF 1/16" OR GREATER OCCURS. MAXIMUM ALLOWABLE SHIM STACK TO BE 1/4".
9. FOR ANCHORING INTO WOOD FRAMING OR 2X BUCK USE #10 WOOD SCREWS WITH SUFFICIENT LENGTH TO ACHIEVE A 1 3/8" MINIMUM EMBEDMENT INTO SUBSTRATE. LOCATE ANCHORS AS SHOWN IN ELEVATIONS AND INSTALLATION DETAILS.
10. FOR ANCHORING INTO MASONRY/CONCRETE USE 3/16" TAPCONS WITH SUFFICIENT LENGTH TO ACHIEVE A 1 1/4" MINIMUM EMBEDMENT INTO SUBSTRATE WITH 2 1/2" MINIMUM EDGE DISTANCE. LOCATE ANCHORS AS SHOWN IN ELEVATIONS AND INSTALLATION DETAILS.
11. FOR ANCHORING INTO METAL STRUCTURE USE #10 SMS OR SELF DRILLING SCREWS WITH SUFFICIENT LENGTH TO ACHIEVE 3 THREADS MINIMUM BEYOND STRUCTURE INTERIOR WALL. LOCATE ANCHORS AS SHOWN IN ELEVATIONS AND INSTALLATION DETAILS.
12. ALL FASTENERS TO BE CORROSION RESISTANT.
13. INSTALLATION ANCHORS SHALL BE INSTALLED IN ACCORDANCE WITH ANCHOR MANUFACTURER'S INSTALLATION INSTRUCTIONS AND ANCHORS SHALL NOT BE USED IN SUBSTRATES WITH STRENGTHS LESS THAN THE MINIMUM STRENGTH SPECIFIED BELOW:
    A. WOOD – MINIMUM SPECIFIC GRAVITY OF G=0.42
    B. CONCRETE – MINIMUM COMPRESSIVE STRENGTH OF 3,192 PSI.
    C. MASONRY – STRENGTH CONFORMANCE TO ASTM C-90, GRADE N, TYPE 1 (OR GREATER).
    D. METAL STRUCTURE: STEEL 18GA, 33KSI OR ALUMINUM 6063-T5 1/8" THICK MINIMUM

WEEP HOLE LOCATIONS:

1) 1/2" X 3/16" HOLES LOCATED AT EACH END OF INTERIOR SILL TRACK.
2) 1" X 1/4" HOLES, WITH COVER, LOCATED 4" FROM EACH END OF EXTERIOR SILL FACE.
3) 7/8" X 1/8" HOLES, LOCATED 1" FROM EACH END OF EXTERIOR SILL FACE.
4) 5/8" X 1/8" HOLES LOCATED 3" FROM EACH END OF BOTTOM RAIL.

TABLE OF CONTENTS

SHEET NO.	DESCRIPTION
1	ELEVATION, ANCHORING AND NOTES
2	CROSS SECTIONS AND B.O.M.
3 – 4	INSTALLATION DETAILS
5	COMPONENTS AND GLAZING DETAIL

SIGNED: 07/23/2013

KOLBE & KOLBE MILLWORK
1211 DEPOT ST
MANAWA, MI 54949

WINDQUEST V707 NON-IMPACT HP SINGLE HUNG
WINDOW 44 X 77
ELEVATION AND NOTES

DRAWN: N.G.	DWG NO. 08-02168	REV –
SCALE NTS	DATE 07/23/13	SHEET 1 OF 5

STATE OF TEXAS
LUIS R. LOMAS
101889
LICENSED
PROFESSIONAL ENGINEER

Luis R. Lomas P.E.
Texas No. 101889

PART LIST				
NO.		DESCRIPTION	MANUFACTURE	MATERIAL
1	4254	MULLION	THERMOPLASTIC INC.	WHITE PVC
2	4202	FRAME	THERMOPLASTIC INC.	WHITE PVC
3	4008	EXTERIOR SILL	THERMOPLASTIC INC.	WHITE PVC
4	4084A	SASH INTERLOCK	THERMOPLASTIC INC.	WHITE PVC
5	4027A	SAHS FRAME	THERMOPLASTIC INC.	WHITE PVC
6	4019	SILL ADAPTOR	THERMOPLASTIC INC.	WHITE PVC
7	4022	7/8" GLAZING BEAD	THERMOPLASTIC INC.	WHITE PVC
8	4010	SAHS STOP	THERMOPLASTIC INC.	WHITE PVC
9	4013	7/8" GLAZING BEAD	THERMOPLASTIC INC.	WHITE PVC
10		7/16" SCREEN FRAME		
11	LDB-100109T	WHEATHERSTRIP	SCHLEGEL	
12	HF-7320-187	WHEATHERSTRIP	SCHLEGEL	
13	PB-8830-187	WHEATHERSTRIP	SCHLEGEL	
14	19X25.4X3.2mm	SETTING BLOCK		80 DUROMETER
15	090101	BALANCE	FERCO	
16	090151	BALANCE SUPPORT	FERCO	
17	090155	TILT SHOE	FERCO	
18	090161	PIVOT	FERCO	
19		TILT LATCH	FASCO	
20	97-03-00-00	VALVE	GEARMOLD	
21	SL047500	LOCK	ROTO	
22	SL047550	KEEPER	ROTO	
23	995	STRUCTURAL SEALANT	DOW CORNING	
24	4052	MULLION CONNECTOR		
25		BALANCE SCREWS PH #8 X 1"		
26		LOCK SCREWS FH #6 X 1"		
27		KEEPER SCREWS FH #6 X 1 1/2"		
28		PIVOT SCREWS FH #8 X 1/2"		
29		SCREEN SUPPORT FH #8 X 1/2"		
30	4053	SCREEN SUPPORT		
31	A112	MULLION REINFORCEMENT		ALUMINUM 6063-T5
32		RECEPTACLE SCREWS FH #10 X 2"		
33		RECEPTACLE	FASCO	
34		TILT LATCH SCREWS FH #8 X 1"		
35	A110	SASH REINFORCEMENT		ALUMINUM 6063-T5
37		REINFORCEMENT SCREWS #8 X 1/2"		
37		MULLION SCREWS PH #10 X 3"		
38	A111	METTING RAIL REINFORCEMENT		ALUMINUM 6063-T5

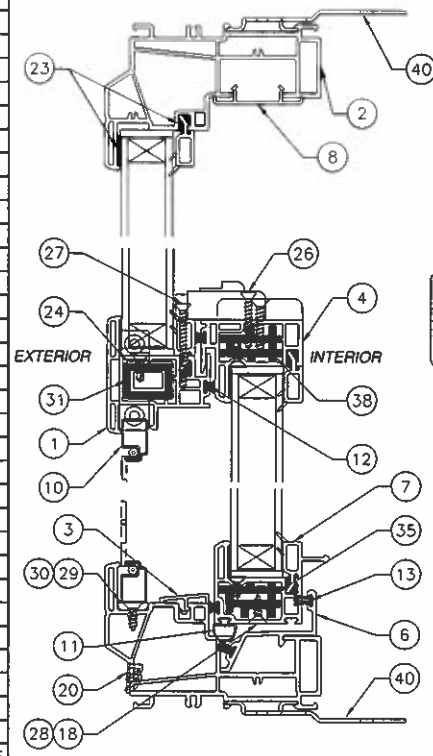

VERTICAL SECTION

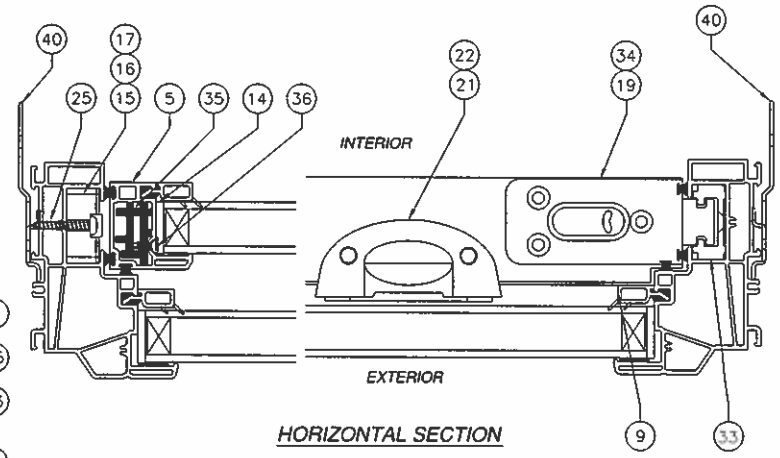

HORIZONTAL SECTION

REVISIONS			
REV	DESCRIPTION	DATE	APPROVED

SIGNED: 07/23/2013

KOLBE & KOLBE MILLWORK
1211 DEPOT ST
MANAWA, MI 54949

WINDQUEST V707 NON-IMPACT HP SINGLE HUNG
WINDOW 44 X 77
CROSS SECTIONS AND B.O.M.

DRAWN: N.G.	DWG NO. 08-02168	REV –
SCALE NTS	DATE 07/23/13	SHEET 2 OF 5

STATE OF TEXAS
LUIS R. LOMAS
101889
LICENSED
PROFESSIONAL ENGINEER

Luis R. Lomas P.E.
Texas No. 101889

REVISIONS			
REV	DESCRIPTION	DATE	APPROVED

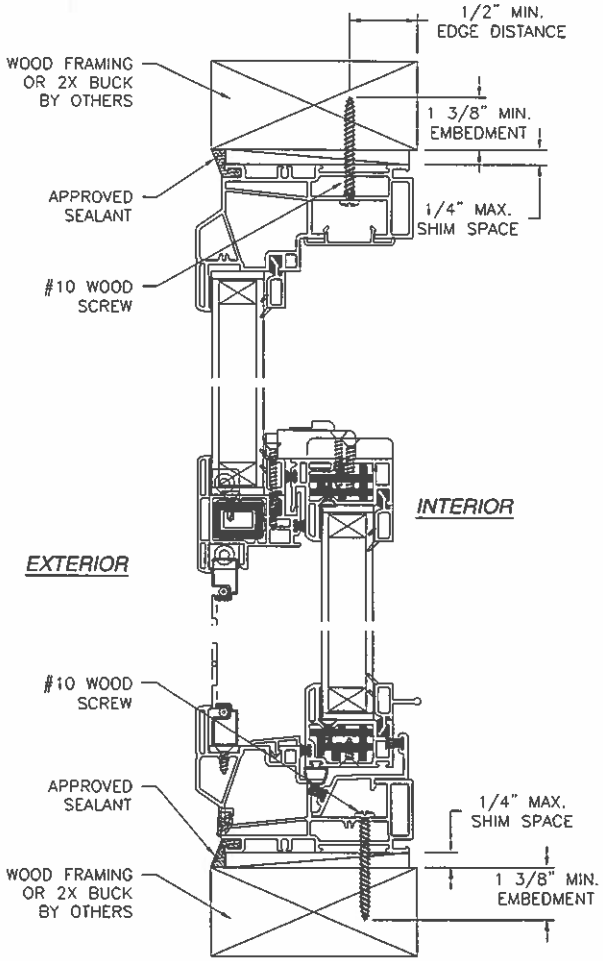

A/3 SECTION
FLUSH INSTALLATION
WOOD FRAMING OR 2X BUCK

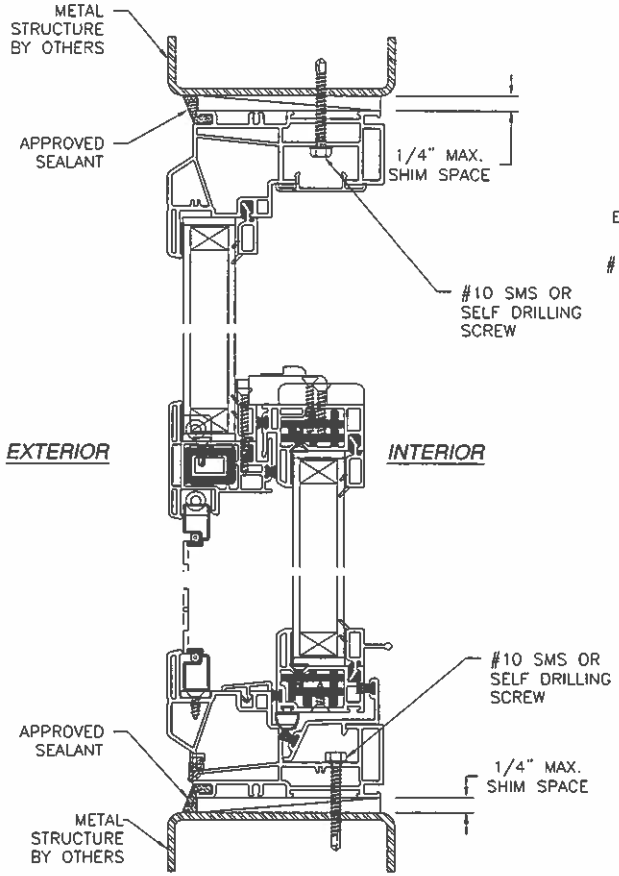

A/3 SECTION
FLUSH INSTALLATION
METAL STRUCTURE

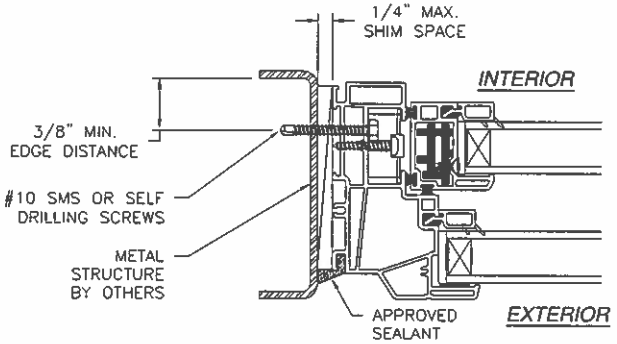

B/4 SECTION
FLUSH INSTALLATION
METAL STRUCTURE

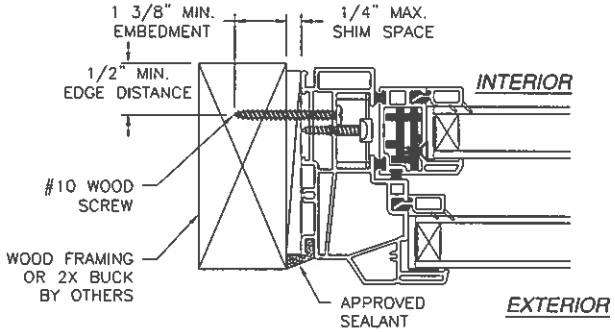

B/3 SECTION
FLUSH INSTALLATION
WOOD FRAMING OR 2X BUCK

SIGNED: 07/23/2013

NOTE:
INTERIOR AND EXTERIOR FINISHES, BY OTHERS, NOT SHOWN FOR CLARITY.

KOLBE & KOLBE MILLWORK
1211 DEPOT ST
MANAWA, MI 54949

WINDQUEST V707 NON-IMPACT HP SINGLE HUNG
WINDOW 44 X 77
INSTALLATION DETAILS

DRAWN: N.G.	DWG NO. 08-02168	REV –
SCALE NTS	DATE 07/23/13	SHEET 3 OF 5

Luis R. Lomas P.E.
Texas No. 101889

REVISIONS			
REV	DESCRIPTION	DATE	APPROVED

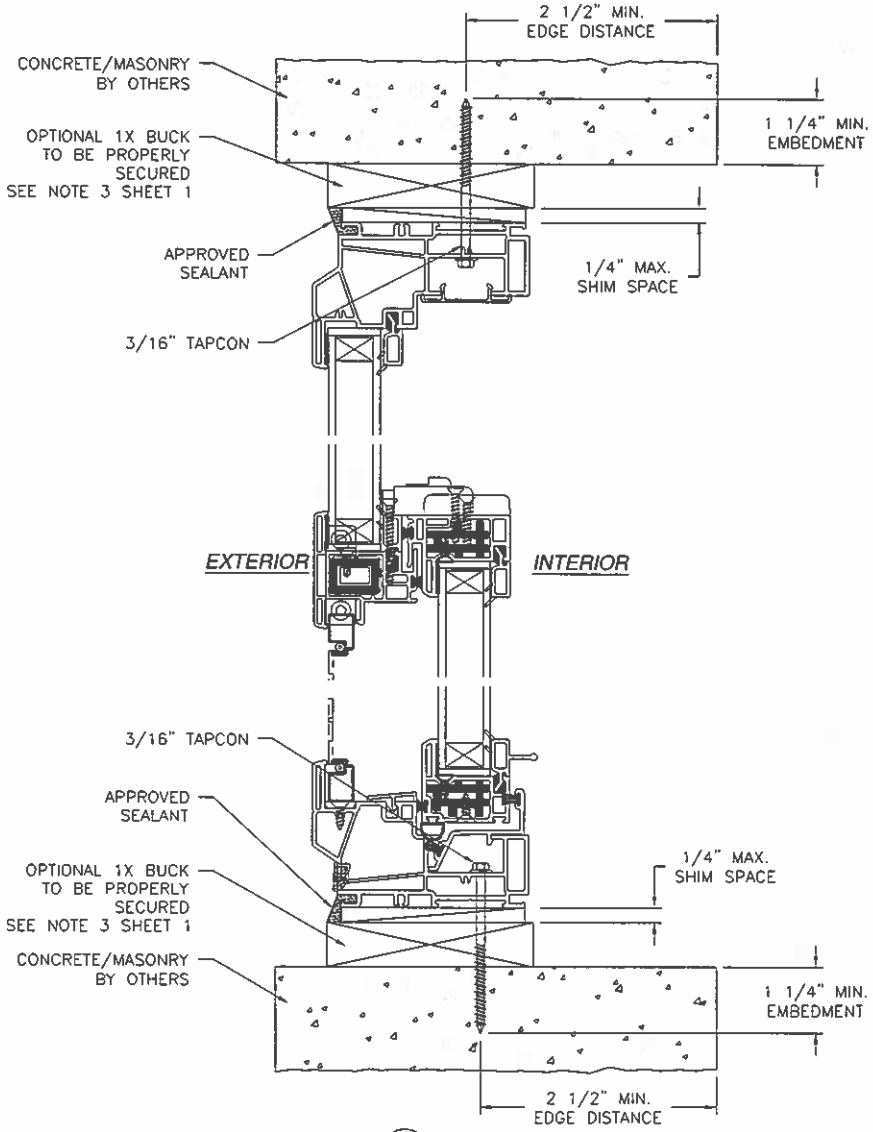

A/4 SECTION
FLUSH INSTALLATION
CONCRETE/MASONRY

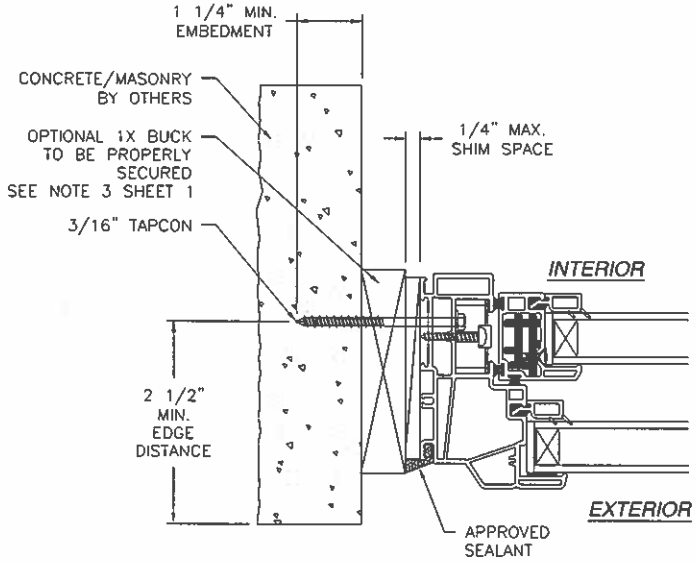

B/4 SECTION
FLUSH INSTALLATION
CONCRETE/MASONRY

NOTE:
INTERIOR AND EXTERIOR FINISHES, BY OTHERS, NOT SHOWN FOR CLARITY.

SIGNED: 07/23/2013

KOLBE & KOLBE MILLWORK
1211 DEPOT ST
MANAWA, MI 54949

WINDQUEST V707 NON-IMPACT HP SINGLE HUNG
WINDOW 44 X 77
INSTALLATION DETAILS

DRAWN: N.G.	DWG NO. 08-02168	REV –
SCALE NTS	DATE 07/23/13	SHEET 4 OF 5

Luis R. Lomas P.E.
Texas No. 101889

REVISIONS			
REV	DESCRIPTION	DATE	APPROVED

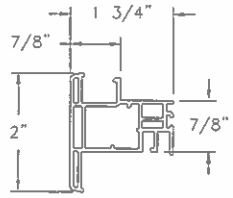

1 MULLION
VINYL PVC .059 THICK

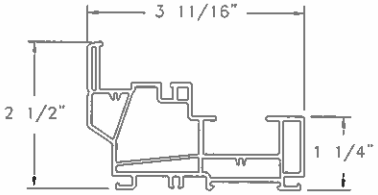

2 FRAME
VINYL PVC .069 THICK

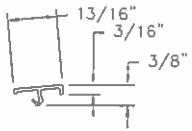

3 EXTERIOR SILL
VINYL PVC .051 THICK

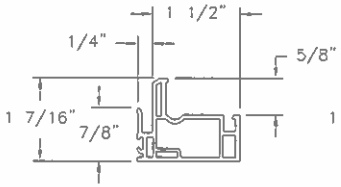

4 SASH INTERLOCK
VINYL PVC .069 THICK

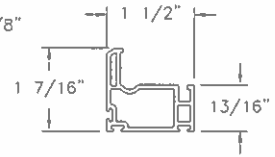

5 SASH FRAME
VINYL PVC .069 THICK

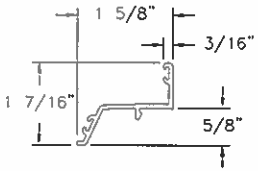

6 SILL ADAPTER
VINYL PVC .069 THICK

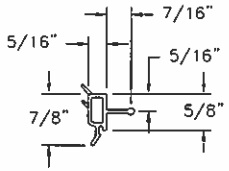

7 7/8" GLAZING BEAD
VINYL PVC .059 THICK

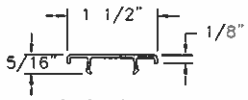

8 SASH STOP
VINYL PVC .047 THICK

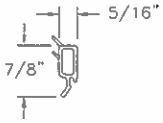

9 7/8" GLAZING BEAD
VINYL PVC .059 THICK

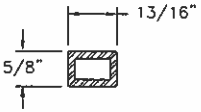

31 MULLION REINFORCEMENT
AL 6063-T5 .118 THICK

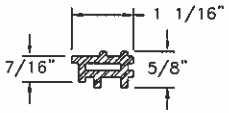

35 SASH REINFORCEMENT
AL 6063-T5 .118 THICK

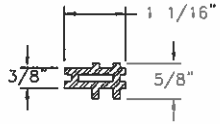

38 RAIL REINFORCEMENT
AL 6063-T5 .118 THICK

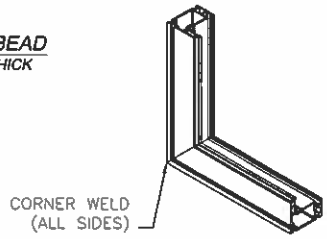

SASH CORNER CONSTRUCTION

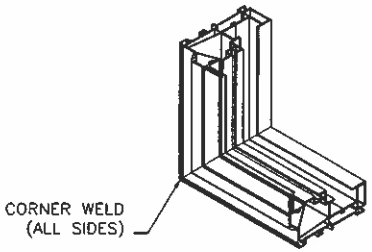

FRAME CORNER CONSTRUCTION

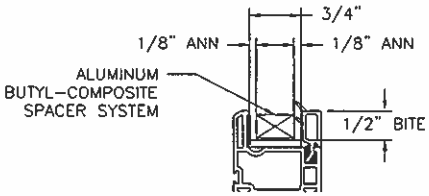

GLAZING DETAIL

SIGNED: 07/23/2013

KOLBE & KOLBE MILLWORK
1211 DEPOT ST
MANAWA, MI 54949

WINDQUEST V707 NON-IMPACT HP SINGLE HUNG
WINDOW 44 X 77
COMPONENTS AND GLAZING DETAIL

DRAWN:	DWG NO.	REV
N.G.	08-02168	–
SCALE NTS	DATE 07/23/13	SHEET 5 OF 5

STATE OF TEXAS
LUIS R. LOMAS
101889
LICENSED
PROFESSIONAL ENGINEER

Luis R. Lomas P.E.
Texas No. 101889