ANDERSEN CORPORATION

A-SERIES AWNING & VENTING TRANSOM WINDOWS- (IMPACT)

INSTALLATION NOTES:

1. ONE (1) INSTALLATION ANCHOR IS REQUIRED AT EACH ANCHOR LOCATION SHOWN.
2. THE NUMBER OF INSTALLATION ANCHORS DEPICTED IS THE MINIMUM NUMBER OF ANCHORS TO BE USED FOR PRODUCT INSTALLATION OF THE MAXIMUM SIZE LISTED.
3. INSTALL INDIVIDUAL INSTALLATION ANCHORS WITHIN A TOLERANCE OF ±1/2 INCH THE DEPICTED LOCATION & SPACING IN THE ANCHOR LAYOUT DETAILS (I.E., WITHOUT CONSIDERATION OF TOLERANCES). TOLERANCES ARE NOT CUMULATIVE FROM ONE INSTALLATION ANCHOR TO THE NEXT.
4. SHIM AS REQUIRED AT EACH INSTALLATION ANCHOR WITH LOAD BEARING SHIM(S). MAXIMUM ALLOWABLE SHIM STACK TO BE 3/8 INCH. SHIM WHERE SPACE OF 1/16 INCH OR GREATER OCCURS. SHIM(S) SHALL BE CONSTRUCTED OF HIGH DENSITY PLASTIC OR BETTER.
5. **INSTALLATION CLIP:** FOR INSTALLATION INTO WOOD FRAMING USE TWO (2) #10 WOOD SCREWS PER LOCATION OF SUFFICIENT LENGTH TO ACHIEVE 1-1/2 INCH MINIMUM EMBEDMENT INTO WOOD SUBSTRATE.
6. **INSTALLATION CLIP:** FOR INSTALLATION INTO METAL STUD OR APPROVED MULLION USE TWO (2) #10-16 GR. 5 SELF-TAPPING SCREW PER LOCATION OF SUFFICIENT LENGTH TO ACHIEVE A MINIMUM OF 3 THREADS PENETRATION BEYOND METAL FRAME SUBSTRATE.
7. **INSTALLATION CLIP:** FOR INSTALLATION THROUGH 1X BUCK TO CONCRETE/MASONRY, OR DIRECTLY INTO CONCRETE/MASONRY, USE TWO (2) 3/16 INCH DIAMETER ITW TAPCONS OR ONE (1) 1/4 INCH DIAMETER ITW TAPCON PER LOCATION OF SUFFICIENT LENGTH TO ACHIEVE 1-1/4 INCH MINIMUM EMBEDMENT. ANCHORS SHALL BE INSTALLED THROUGH CLIP SUCH THAT A MINIMUM 1-3/4" O.C. SPACING IS MAINTAINED.
8. MINIMUM EMBEDMENT AND EDGE DISTANCE EXCLUDE WALL FINISHES, INCLUDING BUT NOT LIMITED TO STUCCO, FOAM, BRICK VENEER, AND SIDING.
9. INSTALLATION ANCHORS AND ASSOCIATED HARDWARE MUST BE MADE OF CORROSION RESISTANT MATERIAL OR HAVE A CORROSION RESISTANT COATING.
10. FOR HOLLOW BLOCK AND GROUT FILLED BLOCK, DO NOT INSTALL INSTALLATION ANCHORS INTO MORTAR JOINTS. EDGE DISTANCE IS MEASURED FROM FREE EDGE OF BLOCK OR EDGE OF MORTAR JOINT INTO FACE SHELL OF BLOCK.
11. INSTALLATION ANCHORS SHALL BE INSTALLED IN ACCORDANCE WITH ANCHOR MANUFACTURER'S INSTALLATION INSTRUCTIONS, AND ANCHORS SHALL NOT BE USED IN SUBSTRATES WITH STRENGTHS LESS THAN THE MINIMUM STRENGTH SPECIFIED BY THE ANCHOR MANUFACTURER.
12. INSTALLATION ANCHOR CAPACITIES FOR PRODUCTS HEREIN ARE BASED ON SUBSTRATE MATERIALS WITH THE FOLLOWING PROPERTIES:
    A. WOOD - MINIMUM SPECIFIC GRAVITY OF 0.42.
    B. CONCRETE -MINIMUM COMPRESSIVE STRENGTH OF 3000 PSI.
    C. GROUT-FILLED CMU- UNIT STRENGTH CONFORMS TO ASTM C-90 WITH MINIMUM COMPRESSIVE STRENGTH OF 2000 PSI AND GROUT CONFORMS TO ASTM C 476, MINIMUM GROUT COMPRESSIVE STRENGTH OF 2000 PSI.
    D. HOLLOW BLOCK CMU - UNIT STRENGTH CONFORMS TO ASTM C-90 WITH MINIMUM COMPRESSIVE STRENGTH OF 2000 PSI.
    E. STEEL - MINIMUM YIELD STRENGTH OF 33 KSI. MINIMUM WALL THICKNESS OF 35.9 MIL (0.0359" or 20 GAUGE). MIN. 1/2" EDGE DISTANCE.
    F. ALUMINUM - MINIMUM ALLOY 6063-T5. MINIMUM WALL THICKNESS OF 0.078". MIN. 1/2" EDGE DISTANCE.

GENERAL NOTES:

1. THE PRODUCT SHOWN HEREIN IS DESIGNED AND MANUFACTURED TO COMPLY WITH THE 2006 INTERNATIONAL BUILDING CODE (IBC) AND INTERNATIONAL RESIDENTIAL CODE (IRC) WITH 2006 TEXAS REVISIONS, EFFECTIVE JANUARY 1, 2008 AND HAS BEEN EVALUATED ACCORDING TO THE FOLLOWING:
    - AAMA/WDMA/CSA 101/I.S.2/A440-05/08
    - ASTM E1886-02/05
    - ASTM E1996-02/05
2. ADEQUACY OF THE EXISTING STRUCTURAL CONCRETE/MASONRY, 2X FRAMING, AND METAL FRAMING AS A MAIN WIND FORCE RESISTING SYSTEM CAPABLE OF WITHSTANDING AND TRANSFERRING APPLIED PRODUCT LOADS TO THE FOUNDATION IS THE RESPONSIBILITY OF THE ENGINEER OR ARCHITECT OF RECORD FOR THE PROJECT OF INSTALLATION.
3. 1X AND 2X BUCKS (WHEN USED) SHALL BE DESIGNED AND ANCHORED TO PROPERLY TRANSFER ALL LOADS TO THE STRUCTURE. BUCK DESIGN AND INSTALLATION IS THE RESPONSIBILITY OF THE ENGINEER OR ARCHITECT OF RECORD FOR THE PROJECT OF INSTALLATION.
4. THE INSTALLATION DETAILS DESCRIBED HEREIN ARE GENERIC AND MAY NOT REFLECT ACTUAL CONDITIONS FOR A SPECIFIC SITE. IF SITE CONDITIONS CAUSE INSTALLATION TO DEVIATE FROM THE REQUIREMENTS DETAILED HEREIN, A LICENSED ENGINEER OR ARCHITECT SHALL PREPARE SITE SPECIFIC DOCUMENTS FOR USE WITH THIS DOCUMENT IN NON-HVHZ AREAS.
5. APPROVED IMPACT PROTECTIVE SYSTEM **IS NOT REQUIRED** ON THIS PRODUCT IN AREAS REQUIRING IMPACT RESISTANCE.
6. WINDOW FRAME MATERIAL: PINE
7. CLADDING MATERIAL: FIBREX ® AND FIBERGLASS
8. WOOD COMPONENTS SHALL HAVE BEEN PRESERVATIVE TREATED OR SHALL BE OF A DURABLE SPECIES.
9. GLASS MEETS THE REQUIREMENTS OF ASTM E 1300-04 GLASS CHARTS. SEE SHEET 4 FOR GLAZING DETAILS.

TABLE OF CONTENTS

SHEET	REVISION	SHEET DESCRIPTION
1	-	INSTALLATION & GENERAL NOTES
2	-	ELEVATION, ANCHOR LAYOUTS, & ASSEMBLY NOTES
3	-	VERTICAL SECTIONS
4	-	HORIZONTAL SECTIONS & GLAZING OPTIONS
5	-	BILL OF MATERIALS & COMPONENTS

OVERALL SIZE		DESIGN PRESSURE	MISSILE IMPACT RATING
WIDTH	HEIGHT		
59 1/4"	31 1/4"	+70/- 70 PSF	LARGE & SMALL MISSILE IMPACT
51 1/4"	35 1/4"	+70/- 70 PSF	LARGE & SMALL MISSILE IMPACT

Andersen AW WINDOWS • DOORS
100 FOURTH AVE. NORTH
BAYPORT, MN 55003-1096
PH: (651) 264-5150 FX: (651) 264-5485

TITLE: A-SERIES AWNING & VENTING TRANSOM INSTALLATION & GENERAL NOTES

PREPARED BY:
BUILDING DROPS, INC.
398 E. DANIA BEACH BLVD. #338
DANIA BEACH, FL 33004
PH: (954) 399-8478 FX: (954) 744-4738

REVISIONS

NO.	DESCRIPTION	BY	DATE

STATE OF TEXAS
ALEXIS SPYROU
102957
LICENSED
PROFESSIONAL ENGINEER

12-372

DATE: 08.06.12 | DWN BY: MSS | CHK BY: HFN | SCALE: NTS

DWG #: AWD066

SHEET: 1 OF 5

10/5/2012 10:21 AM
\\traffic-srv\common\projects\andersen windows\12-0531 (full submittal - windows and doors)\awd044-awd066 a series awning\awd066 aam + ent.dwg

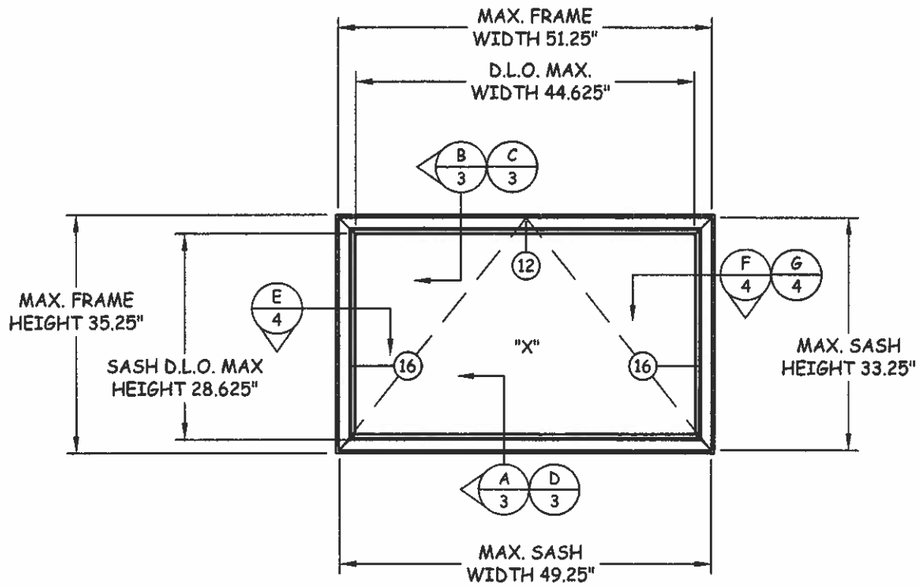

ELEVATION

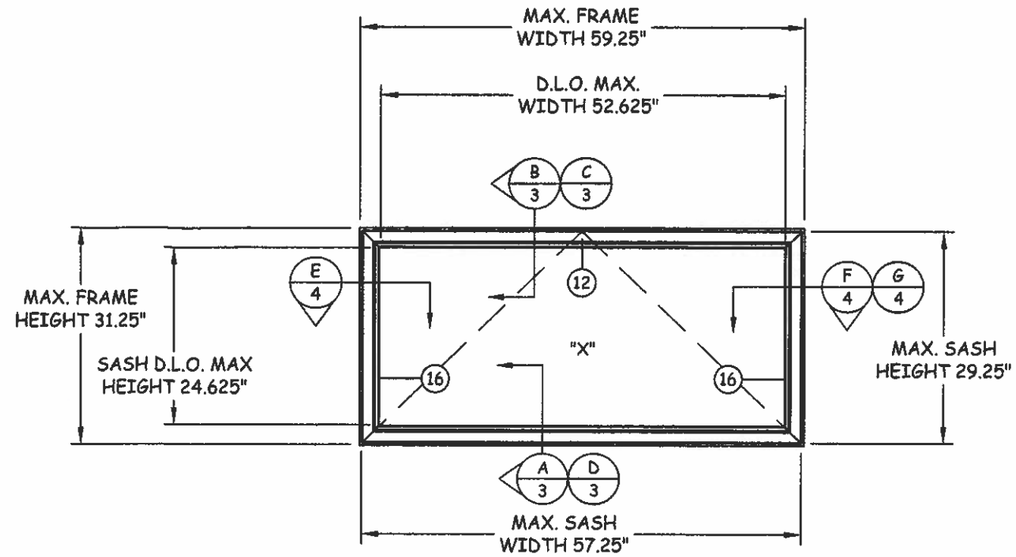

ELEVATION

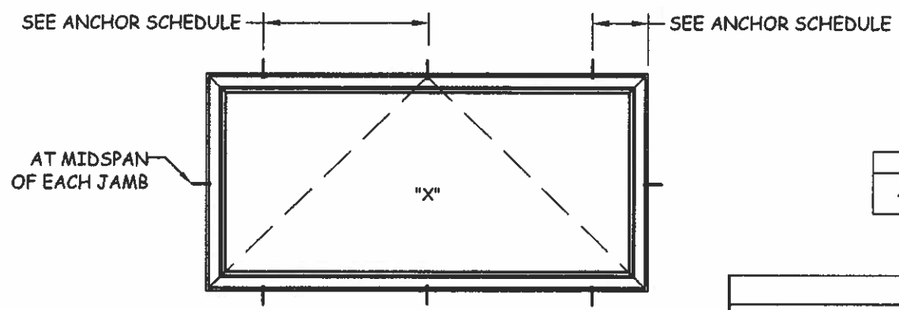

TYPICAL ANCHOR LAYOUT

INSTALLATION CLIP

ANCHOR LEGEND
— INSTALLATION CLIP LOCATION.

ANCHOR SCHEDULE - HEAD/SILL		
WIDTH (W)	DESCRIPTION	TOTAL QUANTITY
W > 51.25"	USE ONE CLIP 12" FROM EACH CORNER AND ONE AT MIDSPAN	3
35.25" < W ≤ 51.25"	USE ONE CLIP 12" FROM EACH CORNER	2
W ≤ 35.25"	USE ONE CLIP AT MIDSPAN	1

ASSEMBLY NOTES:

1) LOCK KEEPERS SHALL BE FASTENED TO SASH WITH TWO #8 X 7/8" SCREWS.
2) SNUGGER SETS AT HEAD JAMBS SHALL BE FASTENED TO SASH AND FRAME WITH FOUR #8 X 7/8" SCREWS, TWO THROUGH SNUGGER TO FRAME, AND TWO THROUGH SNUGGER TO SASH.
3) INTERIOR TRIM STOPS SHALL BE SECURED WITH 3/16" X 1" STAPLES 3" FROM CORNERS AND 10" O.C. THEREAFTER.
4) TRIM STOPS SHALL BE SECURED WITH VINYL SPLINE.
5) WOOD FRAME MEMBERS SHALL BE BONDED TO EXTERIOR FRAME CLADDING WITH HOT MELT ADHESIVE.

Andersen AW WINDOWS • DOORS
100 FOURTH AVE. NORTH
BAYPORT, MN 55003-1096
PH: (651) 264-5150 FX: (651) 264-5485

TITLE: A-SERIES AWNING & VENTING TRANSOM ELEVATIONS, ANCHOR LAYOUTS, & ASSEMBLY NOTES

PREPARED BY:
BUILDING DROPS, INC.
398 E. DANIA BEACH BLVD. #338
DANIA BEACH, FL 33004
PH: (954) 399-8478 FX: (954) 744-4738

REVISIONS

NO.	DESCRIPTION	BY	DATE

STATE OF TEXAS
ALEXIS SPYROU
102957
LICENSED PROFESSIONAL ENGINEER
ALEXIS SPYROU P.E.
TEXAS P.E. LICENSE #102957
398 E. DANIA BEACH BLVD. #338
DANIA BEACH, FL 33004

12-372

DATE: 08.06.12	DWN BY: MSS	CHK BY: HFN	SCALE: NTS

DWG #: AWD066

SHEET: 2 OF 5

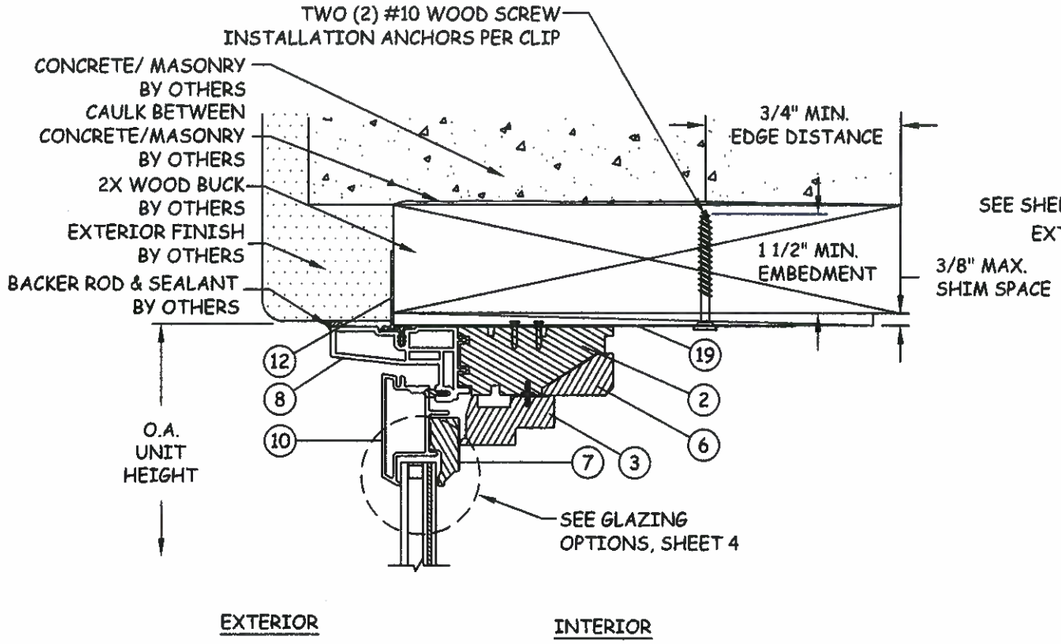

B/3 VERTICAL SECTION
HEAD - 2X WOOD BUCK AWNING

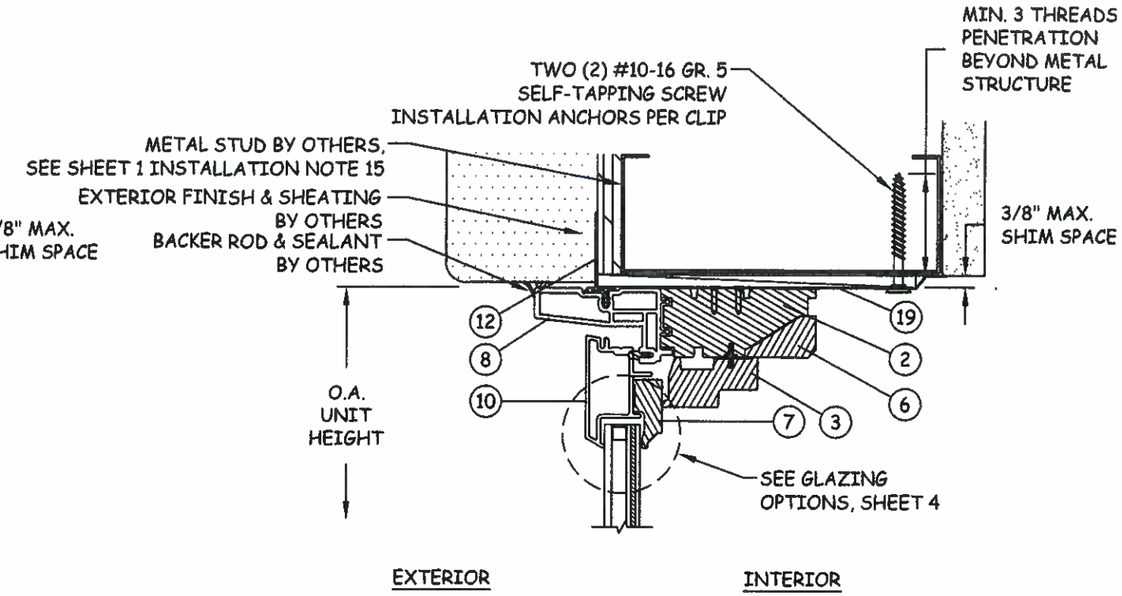

C/3 VERTICAL SECTION
HEAD-METAL STUD VENTING TRANSOM

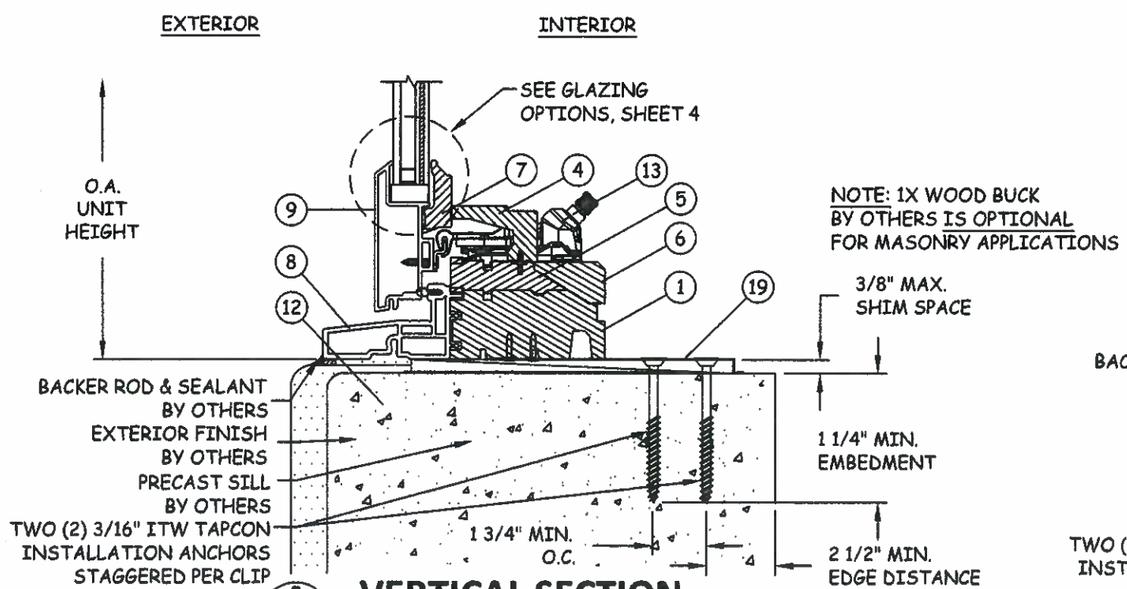

A/3 VERTICAL SECTION
SILL - CONCRETE/MASONRY AWNING

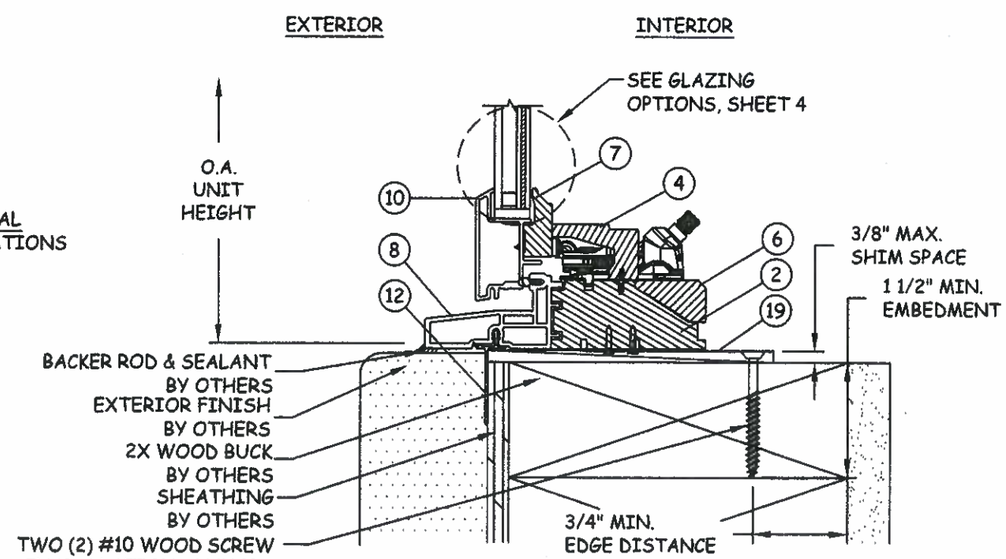

D/3 VERTICAL SECTION
SILL - 2X WOOD FRAME VENTING TRANSOM

Andersen AW WINDOWS • DOORS
100 FOURTH AVE. NORTH
BAYPORT, MN 55003-1096
PH: (651) 264-5150 FX: (651) 264-5485

TITLE: A-SERIES AWNING & VENTING TRANSOM VERTICAL SECTIONS

PREPARED BY:
BUILDING DROPS, INC.
398 E. DANIA BEACH BLVD. #338
DANIA BEACH, FL 33004
PH: (954) 399-8478 FX: (954) 744-4738

REVISIONS

NO.	DESCRIPTION	BY	DATE

STATE OF TEXAS
ALEXIS SPYROU
102957
LICENSED
PROFESSIONAL ENGINEER
12-3-12

DATE: 08.06.12	DWN BY: MSS	CHK BY: HFN	SCALE: NTS

DWG #: AWD066

SHEET: 3 OF 5

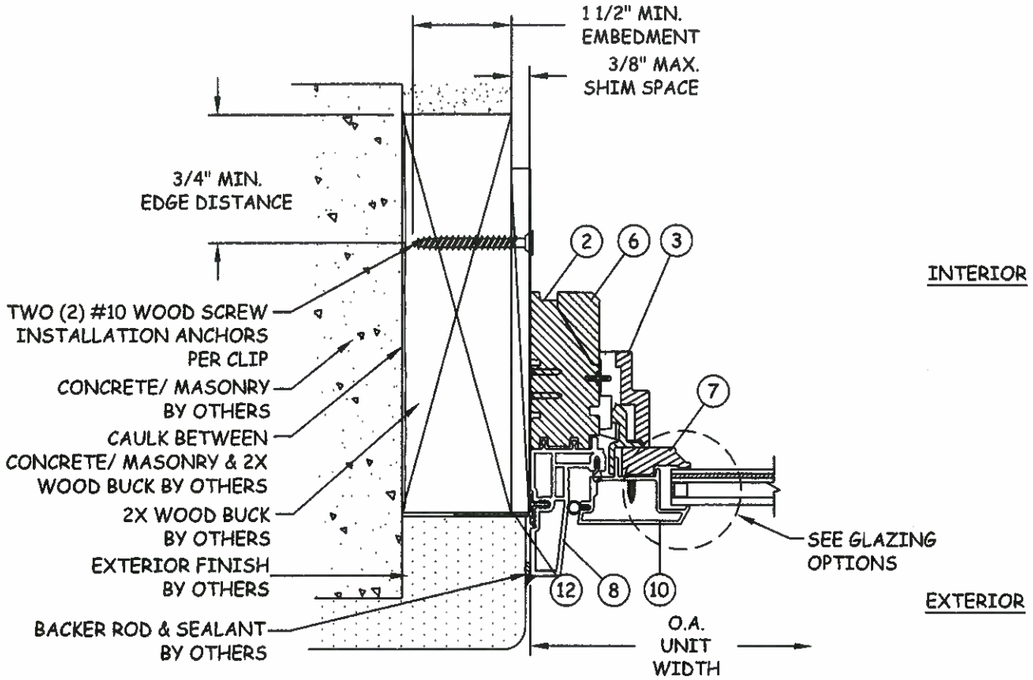

E/4 HORIZONTAL SECTION

JAMB - 2X WOOD BUCK AWNING

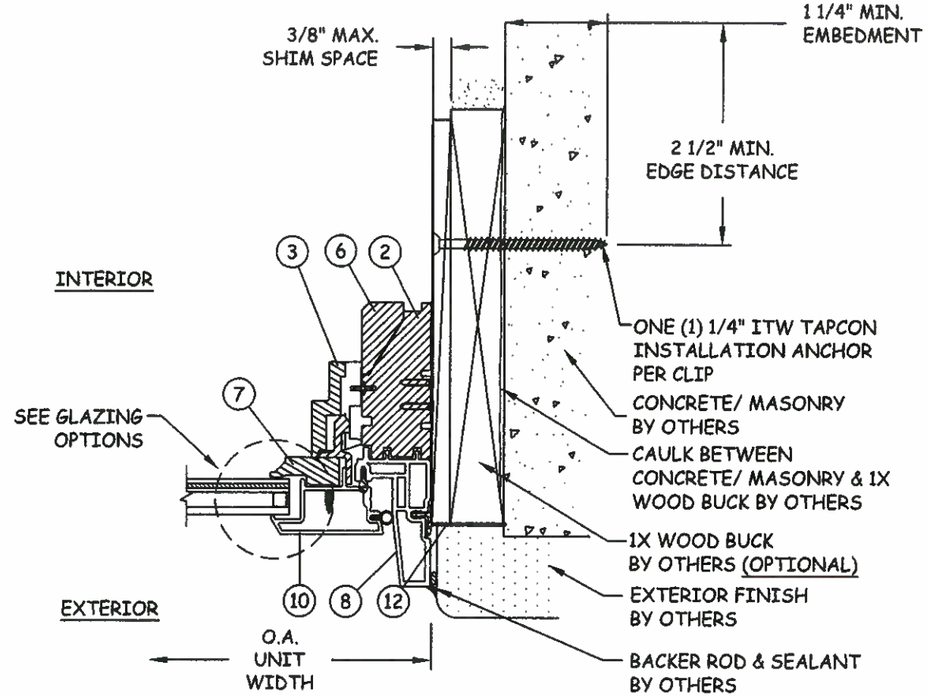

F/4 HORIZONTAL SECTION

JAMB - CONCRETE/MASONRY AWNING

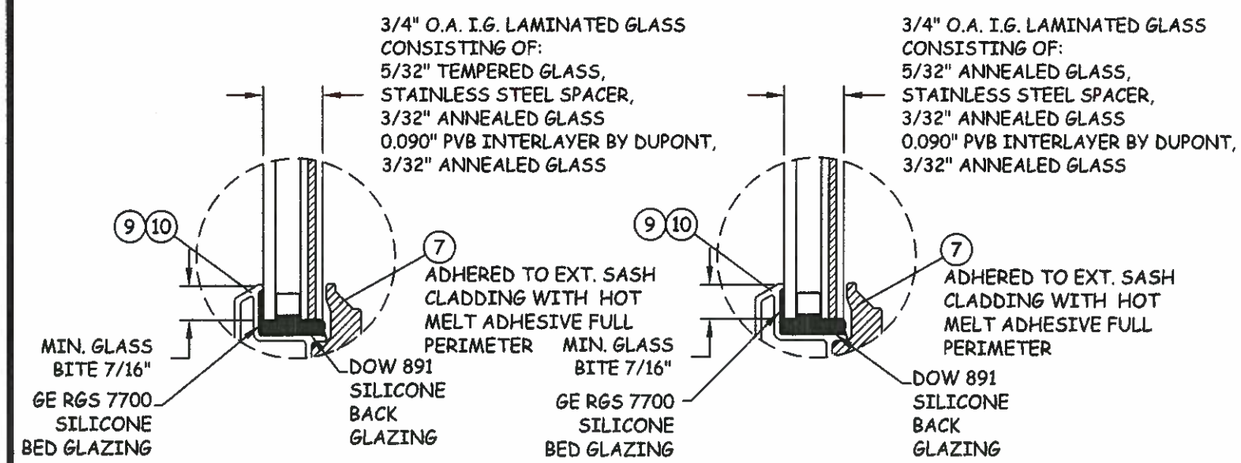

GLAZING OPTION 1

GLAZING OPTION 2

NOTE:
1) FOR INSTALLATION ABOVE 30 FT. ABOVE GRADE IN AREAS REQUIRING IMPACT RESISTANCE, ALL UNITS MUST BE SAFETY GLAZED OR COVERED BY AN IMPACT PROTECTIVE SYSTEM PER IBC SECTION 2406.

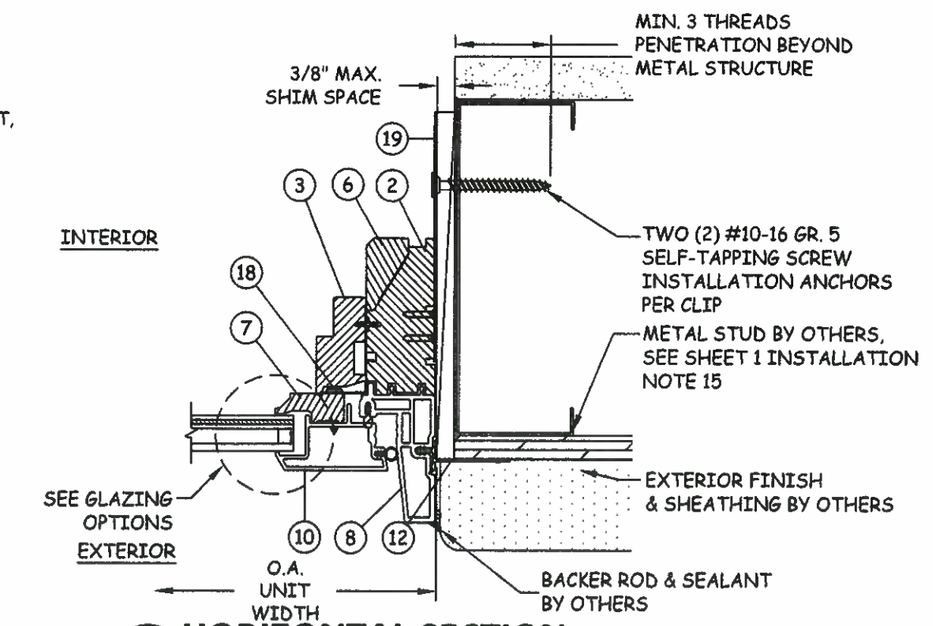

G/4 HORIZONTAL SECTION

JAMB-METAL STUD VENTING TRANSOM

Andersen AW WINDOWS • DOORS
100 FOURTH AVE. NORTH
BAYPORT, MN 55003-1096
PH: (651) 264-5150 FX: (651) 264-5485

TITLE: A-SERIES AWNING & VENTING TRANSOM HORIZONTAL SECTIONS & GLAZING OPTIONS

PREPARED BY:
BUILDING DROPS, INC.
398 E. DANIA BEACH BLVD. #338
DANIA BEACH, FL 33004
PH: (954) 399-8478 FX: (954) 744-4738

REVISIONS

NO.	DESCRIPTION	BY	DATE

STATE OF TEXAS
ALEXIS SPYROU
102957
LICENSED
PROFESSIONAL ENGINEER
12-3-12

DATE: 08.06.12	DWN BY: MSS	CHK BY: HFN	SCALE: NTS

DWG #: AWD066

SHEET: 4 OF 5

BILL OF MATERIALS			
ITEM #	DESCRIPTION	MATERIAL	MANUFACTURER
1	AWNING FRAME - SILL	WOOD	ANDERSEN
2	FRAME - HEAD/JAMBS/SILL	WOOD	ANDERSEN
3	TRIM STOP - HEAD & JAMBS	WOOD	ANDERSEN
4	TRIM STOP - SILL	WOOD	ANDERSEN
5	FRAME STOP - SILL	WOOD	ANDERSEN
6	INTERIOR TRIM STOP	WOOD	ANDERSEN
7	SASH RAIL/STILE, INTERIOR	WOOD	ANDERSEN
8	FRAME CLADDING	FIBREX®	ANDERSEN
9	SASH CLADDING - BOTTOM RAIL	FIBERGLASS	ANDERSEN
10	SASH CLADDING - RAILS/STILES	FIBERGLASS	ANDERSEN
11	NAILING FLANGE	RIGID PVC	ANDERSEN
12	SNUGGER KIT	-	ANDERSEN
13	ROTO-OPERATOR (STRAIGHT OR SPLIT ARM)	-	ANDERSEN
14	-	-	-
15	SWEEP LOCK	-	ANDERSEN
16	LOCK KEEPER	-	ANDERSEN
17	10" HINGE KIT ASSEMBLY	-	ANDERSEN
18	-	-	-
19	INSTALLATION CLIP	304 SS	ANDERSEN

NOTE: ALL WOOD COMPONENTS ARE PINE

1 AWNING FRAME - SILL WOOD

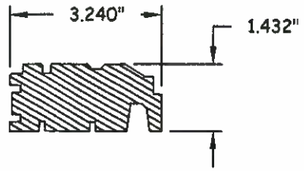

2 FRAME - HEAD & JAMBS WOOD

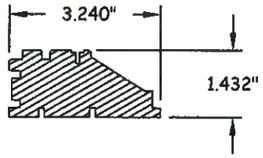

3 TRIM STOP - HEAD & JAMBS WOOD

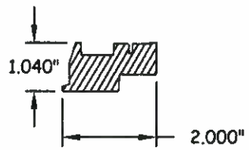

4 TRIM STOP - SILL WOOD

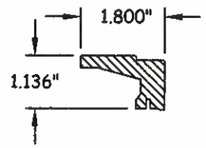

5 FRAME STOP - SILL WOOD

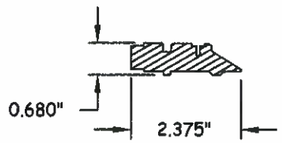

6 INTERIOR TRIM STOP WOOD

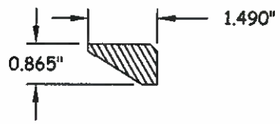

7 SASH RAIL/STILE, INTERIOR WOOD

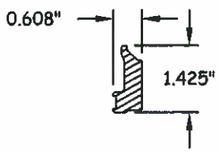

8 FRAME CLADDING FIBREX

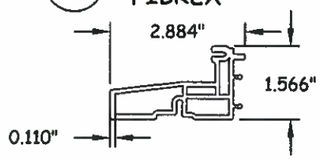

9 SASH CLADDING - BOTTOM RAIL FIBERGLASS

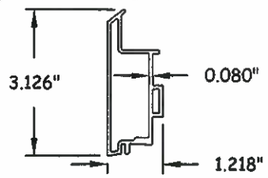

10 SASH CLADDING - RAILS/STILES FIBERGLASS

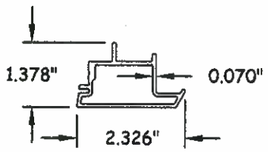

11 NAILING FLANGE RIGID PVC

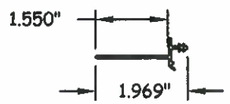

12 SNUGGER KIT

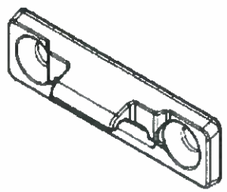

19 INSTALLATION CLIP 304 SS

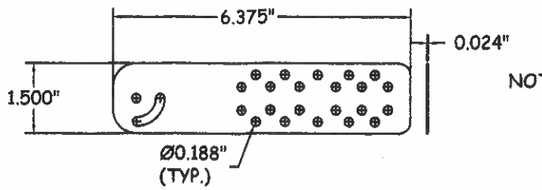

NOTE: INSTALLATION CLIPS SHALL BE ATTACHED TO WINDOW FRAME WITH TWO (2) #8 X 5/8" SCREWS

Andersen AW WINDOWS • DOORS
100 FOURTH AVE. NORTH
BAYPORT, MN 55003-1096
PH: (651) 264-5150 FX: (651) 264-5485

TITLE: A-SERIES AWNING & VENTING TRANSOM
BILL OF MATERIALS & COMPONENTS

PREPARED BY:
BUILDING DROPS, INC.
398 E. DANIA BEACH BLVD. #338
DANIA BEACH, FL 33004
PH: (954) 399-8478 FX: (954) 744-4738

REVISIONS

NO.	DESCRIPTION	BY	DATE

STATE OF TEXAS
ALEXIS SPYROU
102957
LICENSED
PROFESSIONAL ENGINEER
12-3-12

DATE: 08.06.12
DWN BY: MSS
CHK BY: HFN
SCALE: NTS

DWG #: AWD066

SHEET: 5 OF 5