WINCORE™
WINDOWS & DOORS
250 Staunton Turnpike, Parkersburg, WV 26104

8800 Series
Vinyl Horizontal Sliding Window
"IMPACT"

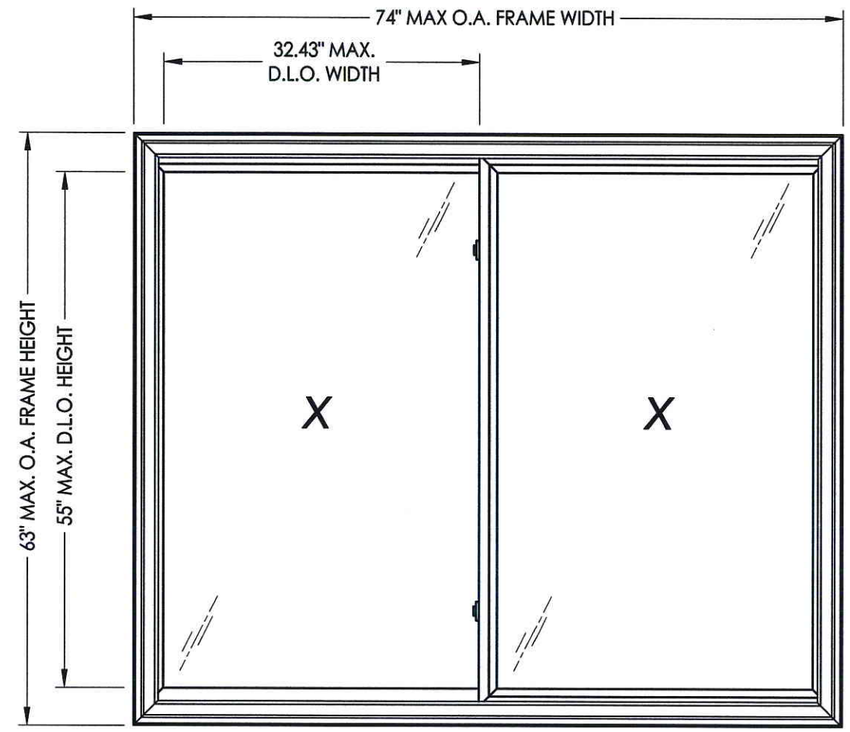

EVALUATED FOR USE IN THE STATE OF TEXAS

The Wincore Horizontal Sliding Window described herein complies with the 2006 International Residential Code (IRC), Sections R308.6 and the 2006 International Building Code (IBC), Sections 1405.12, 1609, 1714.5, 2403 and 2404 (including Texas revisions) subject to the following conditions:

1. Anchors shall be as listed and spaced as shown in the details. Anchor embedment to base material shall be beyond roof covering.
2. When used in areas requiring wind-borne debris protection (Seaward and Inland I areas), this product complies with Section R301.2.1.2 of the IRC and Section 1609.1.2 of the IBC and does not require impact protection. This product meets missile level "D" and includes Wind Zone 4 as defined in ASTM E 1996.
3. Allowable design pressure requirements must be equal to or less than the design pressure rating shown in the design pressure chart, sheet 1 of this drawing.
4. Conditions not covered by this drawing are subject to further engineering analysis.

TABLE OF CONTENTS	
SHEET#	DESCRIPTION
1	Typical elevations, design pressures and general notes
2	Horizontal and vertical cross sections
3	Components
4	Bill of materials, glazing details & components

MAX. FRAME DIMENSION	MAX. D.L.O. DIMENSION	GLASS TYPE	DESIGN PRESSURE (PSF)	
			POSITIVE	NEGATIVE
74.0" X 62.0"	32.43" X 54.0"	G1	+55.0	-55.0
74.0" X 63.0"	32.43" X 55.0"	G2	+50.0	-55.0
74.0" X 63.0"	32.43" X 55.0"	G3	+65.0	-75.0

STATE OF TEXAS
LYNDON F. SCHMIDT
104123
LICENSED
PROFESSIONAL ENGINEER
9-10-13

Documents Prepared By: Lyndon F. Schmidt, P.E.
TEXAS P.E. #104123
RW BUILDING CONSULTANTS, INC.
P.O. Box 230 Valrico FL. 33595
Phone No.: 813.659.9197
TEXAS BOARD OF PROFESSIONAL ENGINEERS
CERTIFICATE OF REGISTRATION # F-11852

PRODUCT: 8800 SERIES

PART OR ASSEMBLY: TYPICAL ELEVATION, DESIGN PRESSURES & GENERAL NOTES

NO.	DATE	REVISIONS	BY

DATE: 9/10/13
SCALE: N.T.S.
DWG. BY: JK
CHK. BY: LFS
DRAWING NO.: TX-4311
SHEET 1 OF 4

© 2013 R.W. BUILDING CONSULTANTS INC.

R:\A - Projects\Project Folders\Proj 1601 - 1700\PF 1679\Horizontal Slider\TX-2013\TX4308-13.dwg, TX-4311

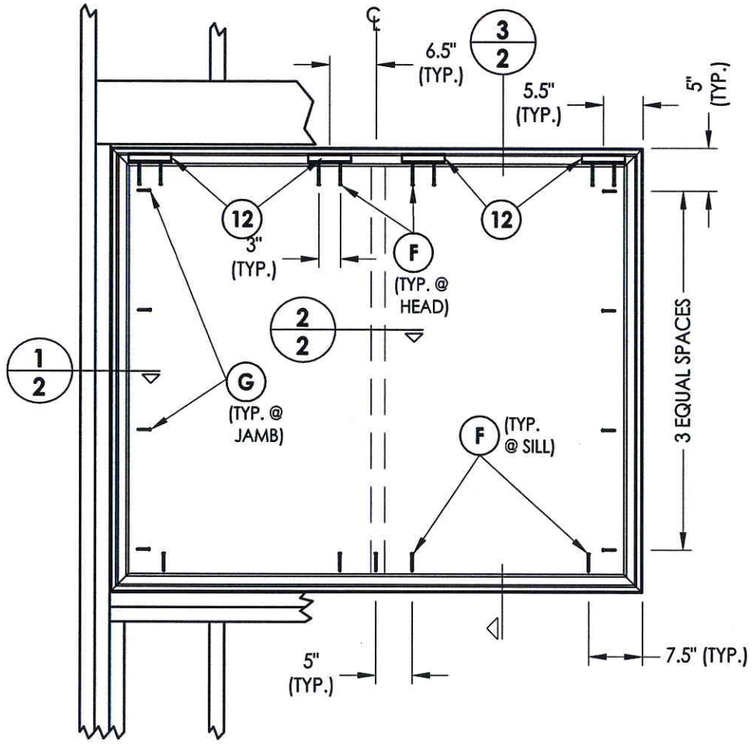

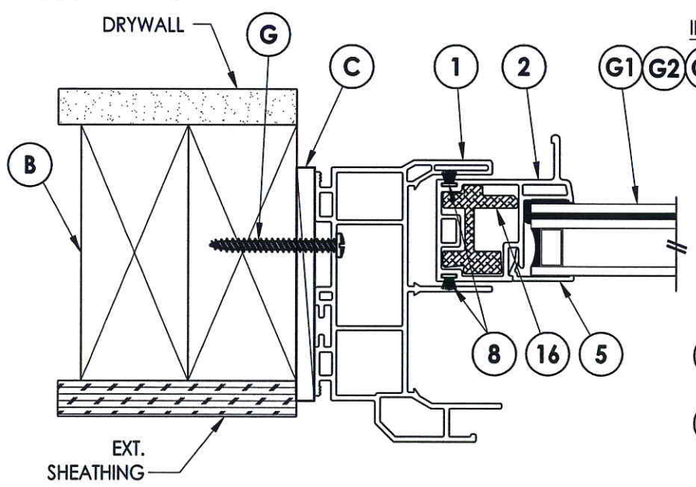

1/2 **HORIZONTAL CROSS SECTION**
Shown w/ 2X buck

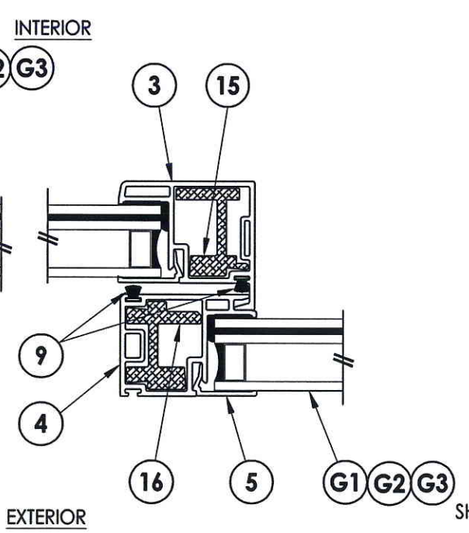

2/2 **HORIZONTAL CROSS SECTION**

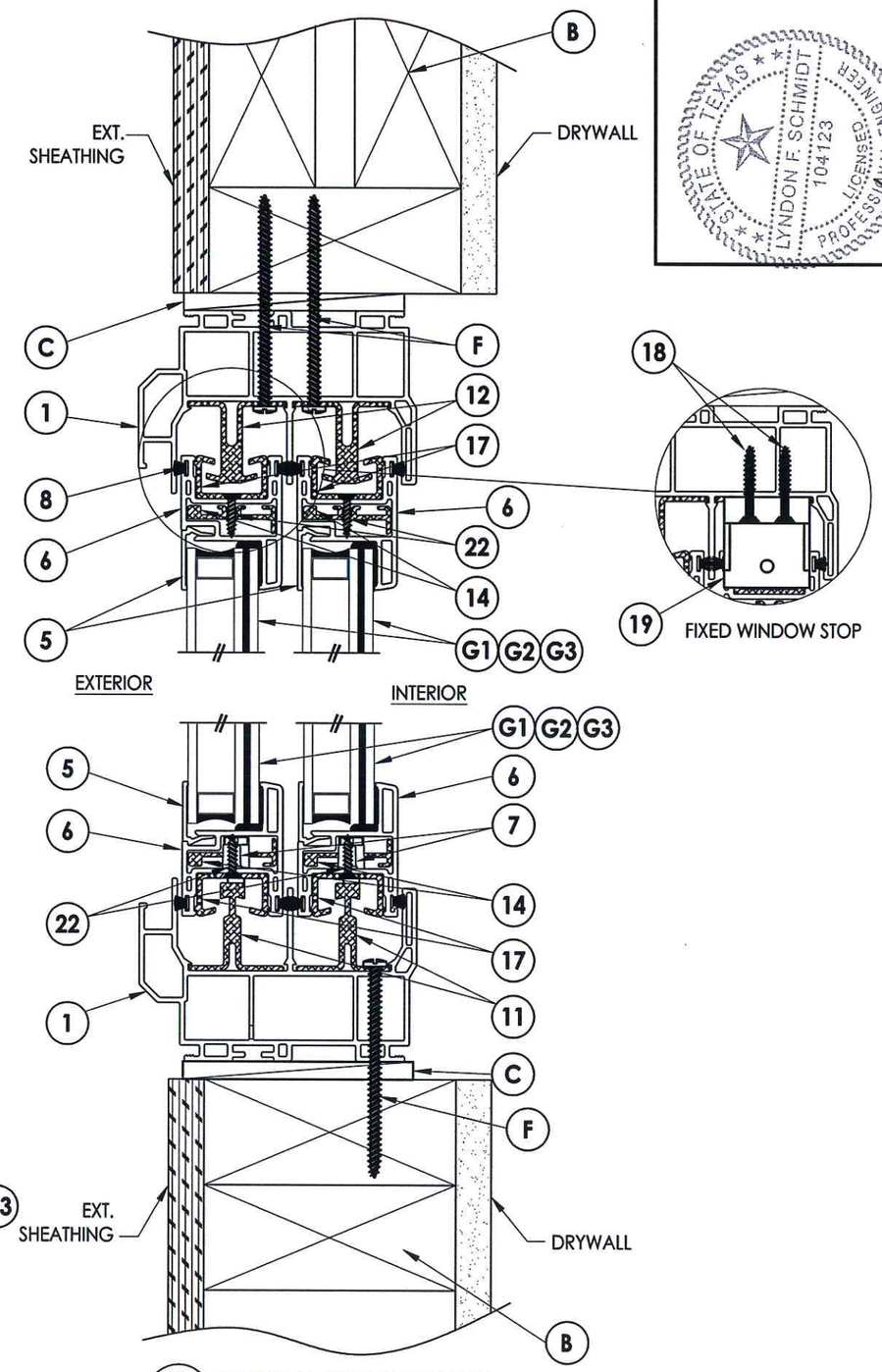

3/2 **VERTICAL CROSS SECTION**

STATE OF TEXAS
LYNDON F. SCHMIDT
104123
LICENSED PROFESSIONAL ENGINEER
9-10-13

Documents Prepared By: Lyndon F. Schmidt, P.E.
TEXAS P.E. #104123

RW BUILDING CONSULTANTS, INC.
P.O. Box 230 Valrico FL. 33595
Phone No.: 813.659.9197
TEXAS BOARD OF PROFESSIONAL ENGINEERS
CERTIFICATE OF REGISTRATION # F-11852

PRODUCT: 8800 SERIES

PART OR ASSEMBLY: HORIZONTAL & VERTICAL CROSS SECTIONS

NO.	DATE	REVISIONS	BY

DATE: 9/10/13
SCALE: N.T.S.
DWG. BY: JK
CHK. BY: LFS
DRAWING NO.: TX-4311
SHEET 2 OF 4

© 2013 R.W. BUILDING CONSULTANTS INC.

R:\A - Projects\Project Folders\Proj 1601 - 1700\PF 1679\Horizontal Slider\TX-2013\TX-4308-13.dwg, 2.4

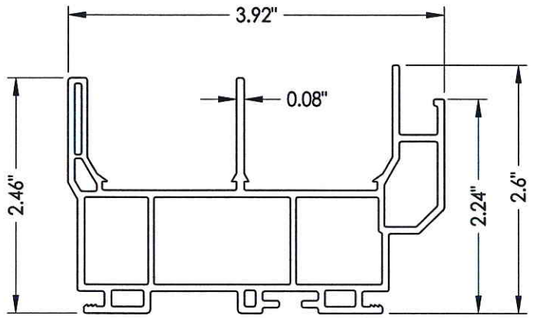

1 FRAME

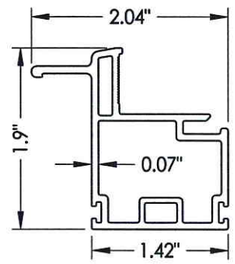

2 SLIDER PULL STILE

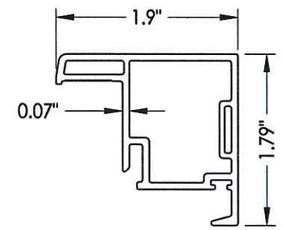

3 LOCK STILE

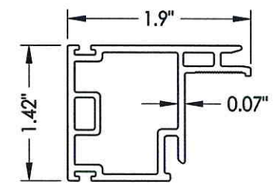

4 KEEPER STILE

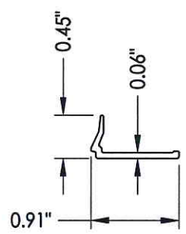

5 GLAZING BEAD

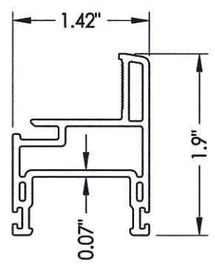

6 SLIDER COMMON RAIL

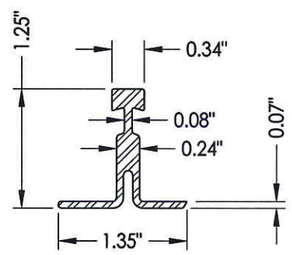

11 SILL TRACK
Full width

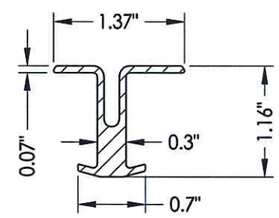

12 HEAD TRACK
6" Long

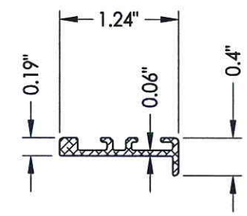

14 REINFORCEMENT
Common Rail

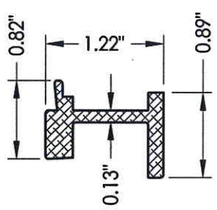

15 REINFORCEMENT
Lock Stile

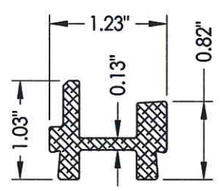

16 REINFORCEMENT
Keeper and Pull Stile

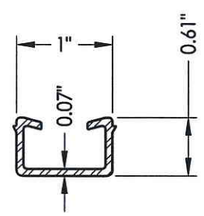

17 SLIDER SASH RETAINING CLIP

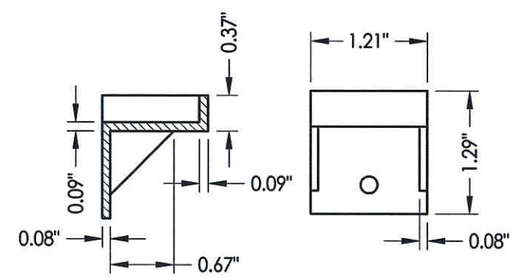

19 FLANKER STOP

STATE OF TEXAS
LYNDON F. SCHMIDT
104123
LICENSED PROFESSIONAL ENGINEER

9.10.13

Documents Prepared By: Lyndon F. Schmidt, P.E.
TEXAS P.E. #104123

RW BUILDING CONSULTANTS, INC.
P.O. Box 230 Valrico FL 33595
Phone No.: 813.659.9197

TEXAS BOARD OF PROFESSIONAL ENGINEERS
CERTIFICATE OF REGISTRATION # F-11852

PRODUCT: 8800 SERIES

PART OR ASSEMBLY:
BILL OF MATERIALS,

NO.	DATE	REVISIONS	BY

DATE: 9/10/13
SCALE: N.T.S.
DWG. BY: JK
CHK. BY: LFS
DRAWING NO.: TX-4311
SHEET 3 OF 4

© 2013 R.W. BUILDING CONSULTANTS INC.

R:\A - Projects\Project Folders\Proj 1601 - 1700\PF 1679\Horizontal Slider\TX-2013\TX-4308-13.dwg, 3.4

BILL OF MATERIALS

ITEM #	DESCRIPTION	MATERIAL
B	2X FRAMING SG >= 0.42	WOOD
C	1/4" MAX. SHIM SPACE	-
F	#10 X 3" PPH WOOD SCREW (MIN. EMB. = 1-5/16")	STEEL
G	#10 X 1-3/4" PPH WOOD SCREW (MIN. EMB. = 1-3/16")	STEEL
1	FRAME*	PVC
2	SLIDER PULL STILE*	PVC
3	LOCK STILE*	PVC
4	KEEPER STILE*	PVC
5	GLAZING BEAD*	PVC
6	SLIDER COMMON RAIL*	PVC
7	BALL BEARING ROLLER	-
8	WEATHERSTRIP (0.230")	-
9	WEATHERSTRIP (0.380")	-
11	SILL TRACK	ALUM
12	HEAD TRACK	ALUM
14	SLIDE RAIL REINFORCEMENT	ALUM
15	REINFORCEMENT	ALUM
16	REINFORCEMENT	ALUM
17	SLIDER SASH RETAINING CLIP	ALUM
18	#8 X 1" PFH SMS	STEEL
19	FLANKER STOP	NYLON
22	#8 X 5/8" (#6 head) PFH SMS	STEEL

* THE APPROVED WHITE RIGID PVC EXTERIOR EXTRUSIONS FOR WINDOWS ARE TO BE PRODUCED BY EXTRUDERS LICENSEES IN "AAMA CERTIFICATION PROGRAMS FOR RIGID PVC EXTRUSIONS".

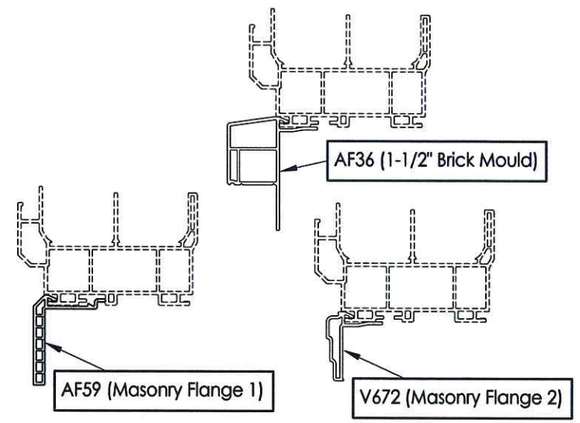

OPTIONAL COSMETIC FLANGES

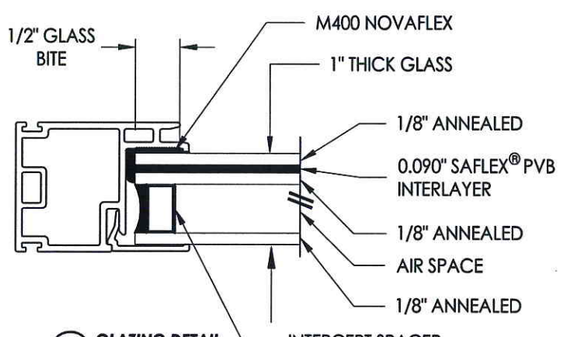

G1 GLAZING DETAIL

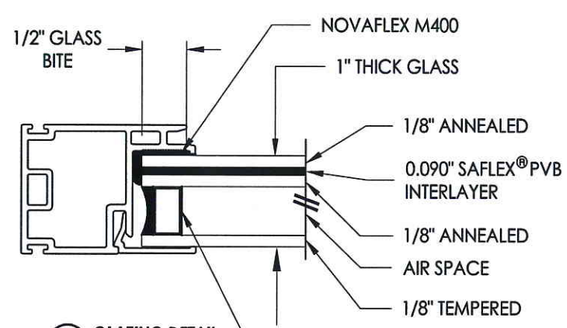

G2 GLAZING DETAIL

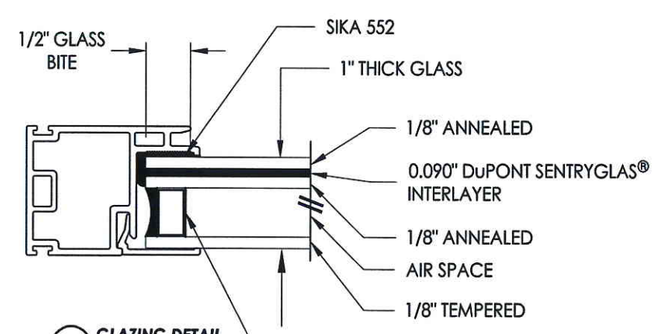

G3 GLAZING DETAIL

STATE OF TEXAS
LYNDON F. SCHMIDT
104123
LICENSED PROFESSIONAL ENGINEER

Documents Prepared By: Lyndon F. Schmidt, P.E.
TEXAS P.E. #104123

R.W. BUILDING CONSULTANTS, INC.
P.O. Box 230 Valrico FL. 33595
Phone No.: 813.659.9197

TEXAS BOARD OF PROFESSIONAL ENGINEERS
CERTIFICATE OF REGISTRATION # F-11852

PRODUCT: 8800 SERIES

PART OR ASSEMBLY: BILL OF MATERIALS, GLAZING DETAILS & COMPONENTS

NO.	DATE	REVISIONS	BY

DATE: 9/10/13
SCALE: N.T.S.
DWG. BY: JK
CHK. BY: LFS
DRAWING NO.: TX-4311
SHEET 4 OF 4

© 2013 R.W. BUILDING CONSULTANTS INC.

R:\A - Projects\Project Folders\Proj 1601 - 1700\PF 1679\Horizontal Slider\TX-2013\TX4308-13.dwg, 4.4