QUAKER WINDOWS & DOORS

SERIES "EMERGE 700 (#395)" HORIZONTAL SLIDER AND SERIES 200 LOUVERS

INSTALLATION NOTES:

1. *ONE (1)* INSTALLATION ANCHOR IS REQUIRED AT EACH ANCHOR LOCATION SHOWN, UNLESS OTHERWISE STATED.
2. THE NUMBER OF INSTALLATION ANCHORS DEPICTED IS THE MINIMUM NUMBER OF ANCHORS TO BE USED FOR PRODUCT INSTALLATION.
3. *INSTALL INDIVIDUAL INSTALLATION ANCHORS WITHIN A TOLERANCE OF ±1/16 INCH OF THE DEPICTED LOCATION IN THE ANCHOR LAYOUT DETAIL (I.E., WITHOUT CONSIDERATION OF TOLERANCES). TOLERANCES ARE NOT CUMULATIVE FROM ONE INSTALLATION ANCHOR TO THE NEXT.*
4. FOR INSTALLATION INTO METAL STUD, USE ONE #10 SELF-DRILLING SCREW, TYPE INSTALLATION ANCHOR PER LOCATION OF SUFFICIENT LENGTH TO ACHIEVE MINIMUM PENETRATION OF 3 THREADS BEYOND METAL STRUCTURE.
5. FOR INSTALLATION INTO 2X WOOD BUCK, USE ONE #10 WOOD SCREW, TYPE INSTALLATION ANCHOR PER LOCATION OF SUFFICIENT LENGTH TO ACHIEVE 1 1/2" MINIMUM EMBEDMENT.
6. MINIMUM EMBEDMENT AND EDGE DISTANCE EXCLUDE WALL FINISHES, INCLUDING BUT NOT LIMITED TO STUCCO, FOAM, BRICK VENEER, AND SIDING.
7. INSTALLATION ANCHORS AND ASSOCIATED HARDWARE MUST BE MADE OF CORROSION RESISTANT MATERIAL OR HAVE A CORROSION RESISTANT COATING.
8. INSTALLATION ANCHORS SHALL BE INSTALLED IN ACCORDANCE WITH ANCHOR MANUFACTURER'S INSTALLATION INSTRUCTIONS, AND ANCHORS SHALL NOT BE USED IN SUBSTRATES WITH STRENGTHS LESS THAN THE MINIMUM STRENGTH SPECIFIED BY THE ANCHOR MANUFACTURER.
9. INSTALLATION ANCHOR CAPACITIES FOR PRODUCTS HEREIN ARE BASED ON SUBSTRATE MATERIALS WITH THE FOLLOWING PROPERTIES:
   A. ALUMINUM - MIN. 6063-T5, MIN. 1/8" THICKNESS. MIN. 1/2" EDGE DISTANCE.
   B. STEEL - MIN. TENSILE YIELD STRENGTH OF 36 KSI, ULTIMATE TENSILE STRENGTH OF 58 KSI. MIN. 18 GAUGE THICKNESS (0.0478"). MIN 1/2" EDGE DISTANCE.
   C. WOOD - MINIMUM SPECIFIC GRAVITY = 0.42

GENERAL NOTES:

1. THE PRODUCT SHOWN HEREIN IS DESIGNED AND MANUFACTURED TO COMPLY WITH THE 2006 & 2009 IBC, IRC, AND 2006 TEXAS REVISIONS EFFECTIVE JANUARY 1, 2008, EXCLUDING HVHZ.
   - *AAMA 450-10*
   - *AAMA/WDMA/CSA 101/I.S.2/A440-08*
   - *ASTM E1886-02/05*
   - *ASTM E1996-02/05*
2. ADEQUACY OF THE EXISTING STRUCTURAL 2X WOOD FRAMING, ALUMINUM, OR STEEL STUD FRAMING AS A MAIN WIND FORCE RESISTING SYSTEM CAPABLE OF WITHSTANDING AND TRANSFERRING APPLIED PRODUCT LOADS TO THE FOUNDATION IS THE RESPONSIBILITY OF THE ENGINEER OR ARCHITECT OF RECORD FOR THE PROJECT OF INSTALLATION.
3. THE INSTALLATION DETAILS DESCRIBED HEREIN ARE GENERIC AND MAY NOT REFLECT ACTUAL CONDITIONS FOR A SPECIFIC SITE. IF SITE CONDITIONS CAUSE INSTALLATION TO DEVIATE FROM THE REQUIREMENTS DETAILED HEREIN, A LICENSED ENGINEER OR ARCHITECT SHALL PREPARE SITE SPECIFIC DOCUMENTS FOR USE WITH THIS DOCUMENT IN NON-HVHZ AREA.
4. APPROVED IMPACT PROTECTIVE SYSTEM **IS NOT REQUIRED** TO PROTECT THIS PRODUCT IN AREAS REQUIRING IMPACT RESISTANCE.
5. GLAZING SHALL COMPLY WITH LOAD RESISTANCE REQUIREMENTS PER ASTM E1300-04.
6. FRAME MATERIAL: *6063-T6 ALUMINUM*
7. PTAC OPENING FOR VENTILATION MAY BE LOCATED AT LEFT, RIGHT, OR CENTER WITH OPTIONAL FULL BLANK-OFF PANEL.

TABLE OF CONTENTS

SHEET	REVISION	SHEET DESCRIPTION
1	-	INSTALLATION AND GENERAL NOTES
2	-	ELEVATION & ANCHOR LAYOUTS
3	-	VERTICAL SECTIONS AND GLAZING DETAIL
4	-	HORIZONTAL SECTIONS
5	-	BILL OF MATERIALS & COMPONENTS
6	-	COMPONENTS

*MAX. DESIGN PRESSURE RATING	
+50.0 / -50.0 PSF	LARGE & SMALL MISSILE IMPACT RATED

*NOTE:
1) LOUVERS SYSTEM IS TO BE INSTALLED IN A LOCATION WHERE THE COMPARTMENT BEHIND LOUVERS IS DESIGNED TO DRAIN WATER PENETRATING INTO THE AREA, OR THE AREA WILL HOUSE WATER RESISTANT/WATER-PROOF EQUIPMENT, COMPONENTS, OR SUPPLIES.
2) DEFLECTORS ARE TO DIRECT INTAKES & EXHAUST FOR P.T.A.C. INSTALLED IN WINDOW SLEEVE BEYOND. THEY HAVE NO EFFECT ON STRUCTURAL INTEGRITY OF LOUVER DESIGN

QUAKER WINDOWS & DOORS
504 HIGHWAY 63 SOUTH
FREEBURG, MO 65582
PH: (651) 264-5150 FX: (651) 264-5485

TITLE: QUAKER 395 SL & 200 LOUVER ELEVATION, ANCHOR LAYOUT, AND INSTALLATION NOTES

PREPARED BY:
BUILDING DROPS
398 E. DANIA BEACH BLVD. STE 338
DANIA BEACH, FL 33004
PH: (954) 399-8478 FX: (954) 744-4738

REVISIONS

NO.	DESCRIPTION	BY	DATE

STATE OF TEXAS
ALEXIS SPYROU
102957
LICENSED
PROFESSIONAL ENGINEER
ALEXIS SPYROU, P.E.
REG. NO. 102957
398 E. DANIA BEACH BLVD. STE 338
DANIA BEACH, FL 33004

DATE: 2.16.12
DWN BY: MSS
CHK BY: HFN
SCALE: NTS

DWG #: QWP006

SHEET: 1 OF 6

7/25/2013 12:15 PM
s:\projects\quaker window products\tdi-p-12-0106.2 (submittal - series 200 louvers)\dwgs\wwp006 395hs - 200l.dwg

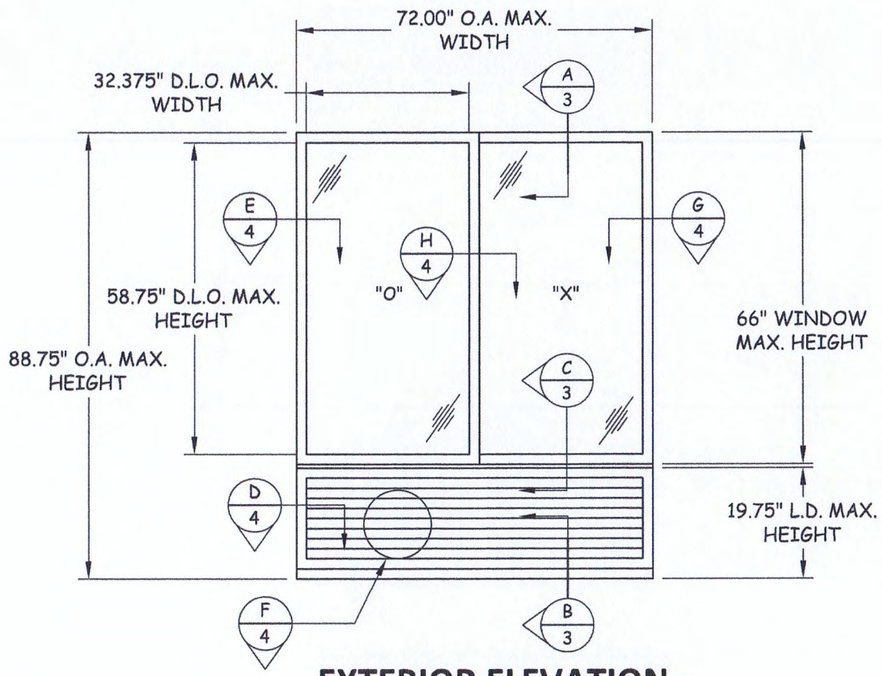

EXTERIOR ELEVATION

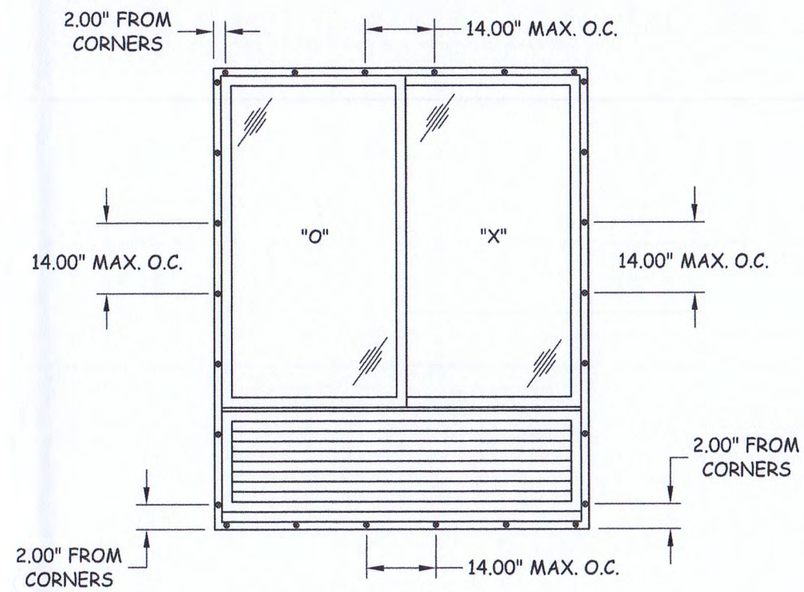

ANCHOR LAYOUT

QUAKER WINDOWS & DOORS
504 HIGHWAY 63 SOUTH
FREEBURG, MO 65582
PH: (651) 264-5150 FX: (651) 264-5485

TITLE: QUAKER 395 SL & 200 LOUVER ELEVATION & ANCHOR LAYOUT

PREPARED BY:
BUILDING DROPS
398 E. DANIA BEACH BLVD. STE 338
DANIA BEACH, FL 33004
PH: (954) 399-8478 FX: (954) 744-4738

REVISIONS

NO.	DESCRIPTION	BY	DATE

STATE OF TEXAS
ALEXIS SPYROU
102957
LICENSED
PROFESSIONAL ENGINEER

DATE: 2.16.12	DWN BY: MSS	CHK BY: HFN	SCALE: NTS

DWG #: QWP006

SHEET: 2 OF 6

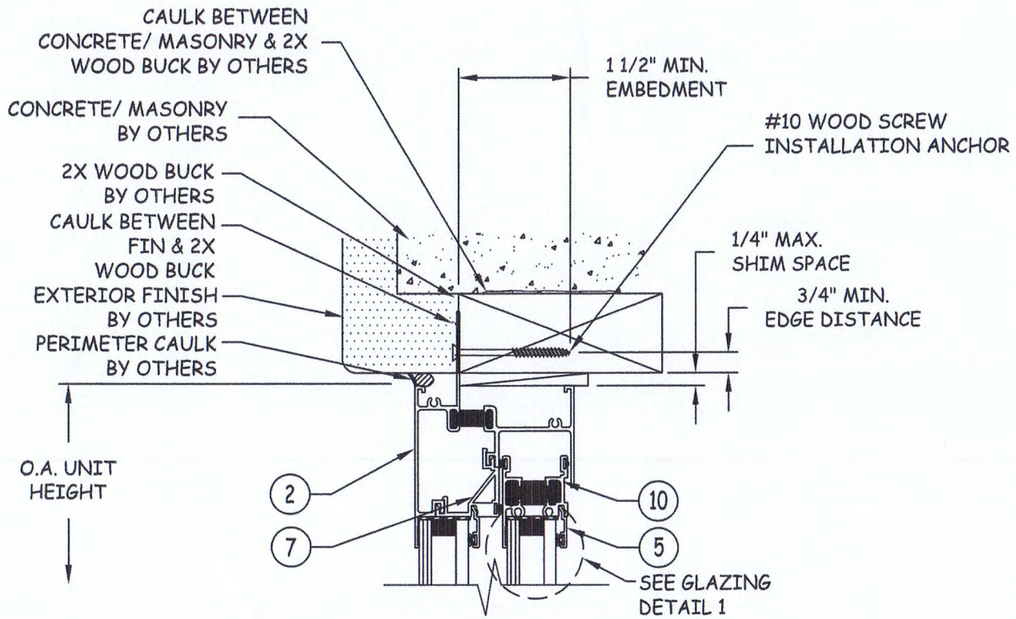

A/3 VERTICAL SECTION

HEAD - 2X WOOD BUCK
HORIZONTAL SLIDER

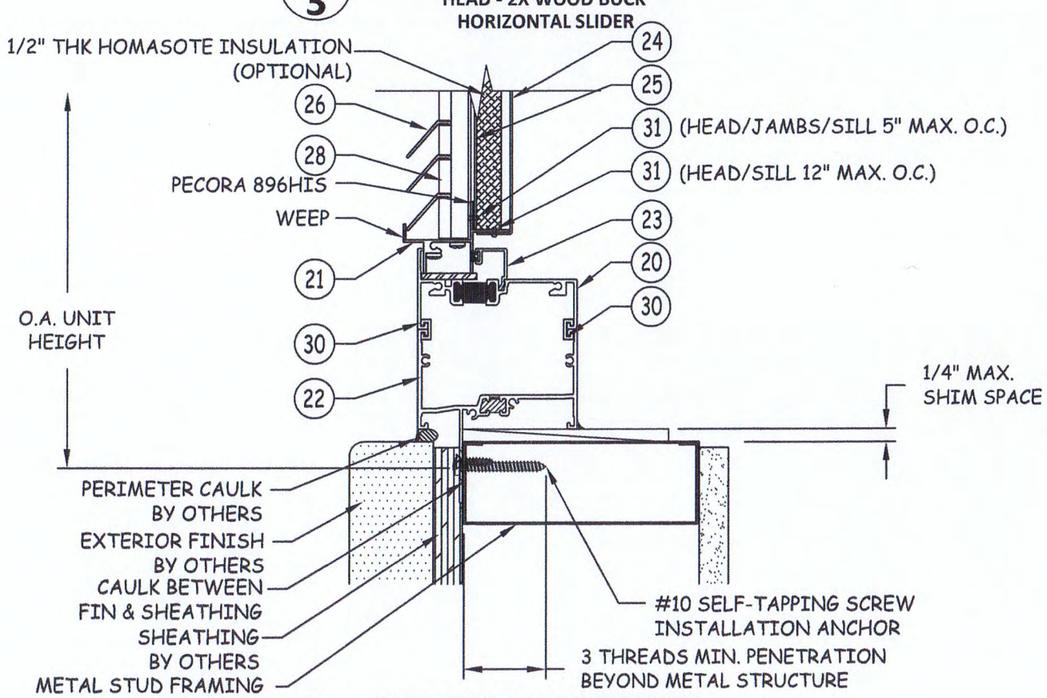

B/3 VERTICAL SECTION

SILL - METAL STUD
LOUVER

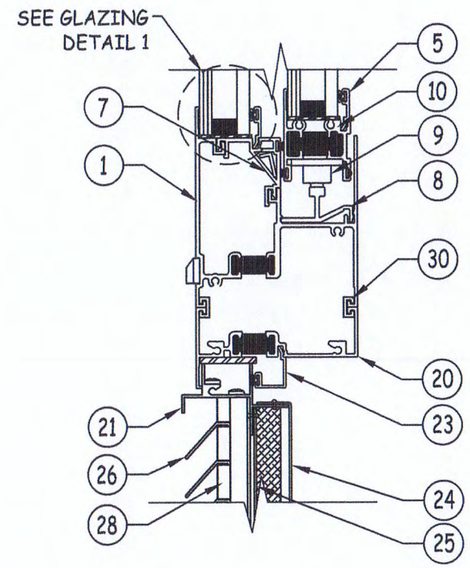

C/3 VERTICAL SECTION

MULLION
HORIZONTAL SLIDER/LOUVER

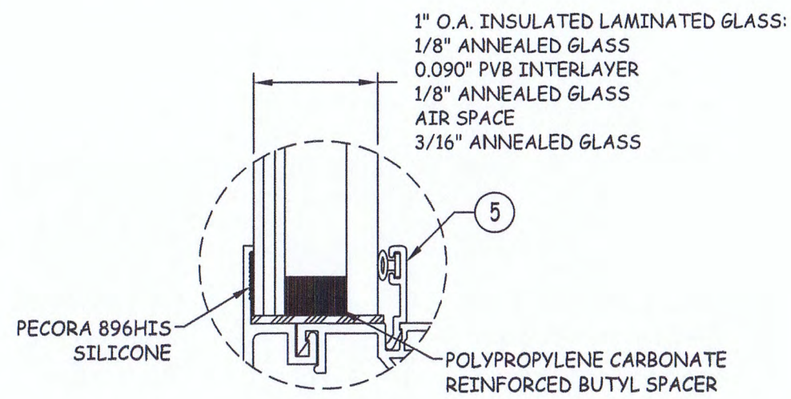

GLAZING DETAIL 1

QUAKER WINDOWS & DOORS
504 HIGHWAY 63 SOUTH
FREEBURG, MO 65582
PH: (651) 264-5150 FX: (651) 264-5485

TITLE: QUAKER 395 SL & 200 LOUVER VERTICAL SECTIONS

PREPARED BY:
BUILDING DROPS
398 E. DANIA BEACH BLVD. STE 338
DANIA BEACH, FL 33004
PH: (954) 399-8478 FX: (954) 744-4738

REVISIONS

NO.	DESCRIPTION	BY	DATE

STATE OF TEXAS
ALEXIS SPYROU
102957
LICENSED
PROFESSIONAL ENGINEER

DATE: 2.16.12
DWN BY: MSS
CHK BY: HFN
SCALE: NTS

DWG #: QWP006

SHEET: 3 OF 6

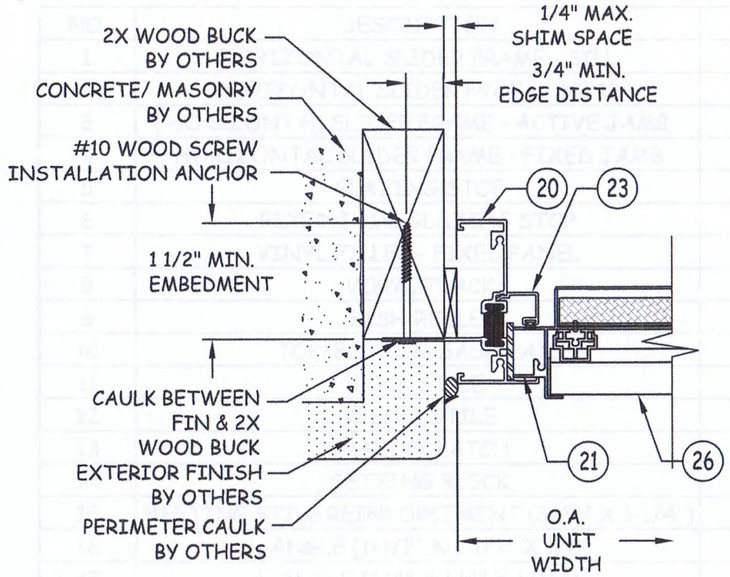

D/4 HORIZONTAL SECTION

JAMB - 2X WOOD BUCK
LOUVER

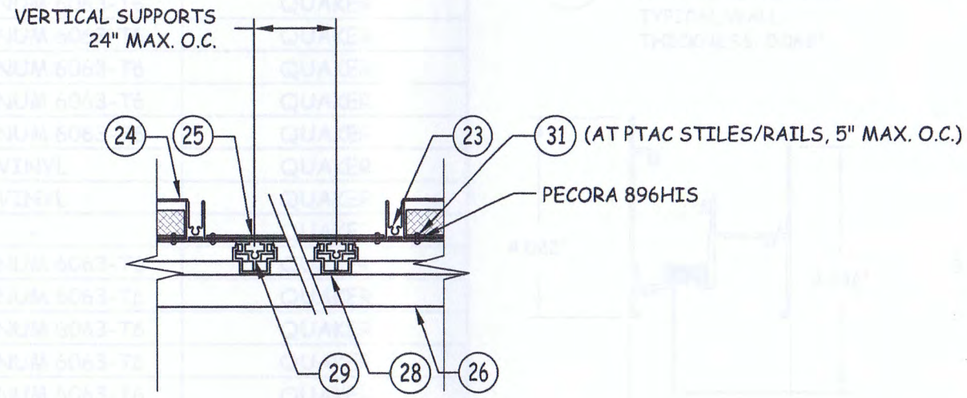

F/4 HORIZONTAL SECTION

VERTICAL SUPPORTS
LOUVER

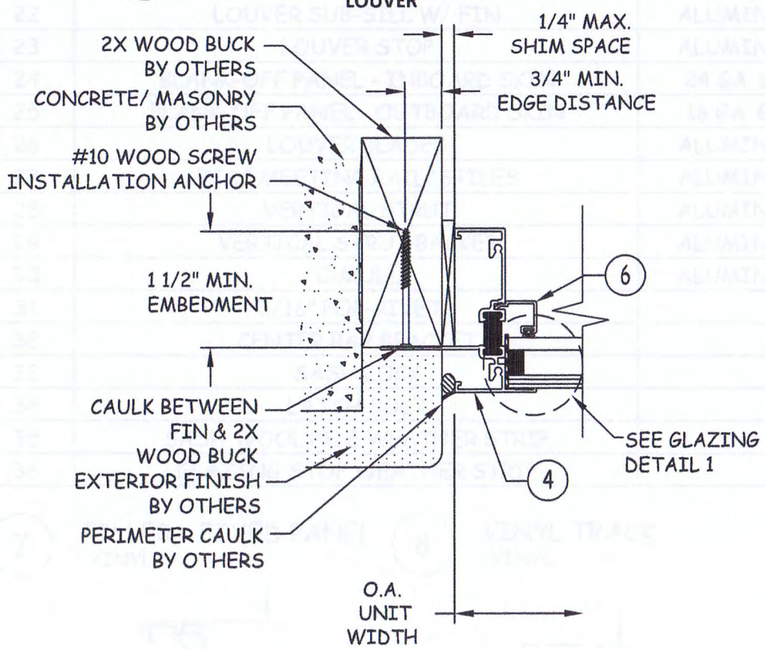

E/4 HORIZONTAL SECTION

JAMB - METAL STUD
HORIZONTAL SLIDER

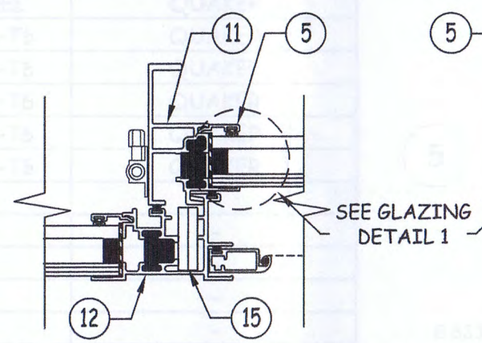

H/4 HORIZONTAL SECTION

MEETING STILE - INTERLOCK
HORIZONTAL SLIDER

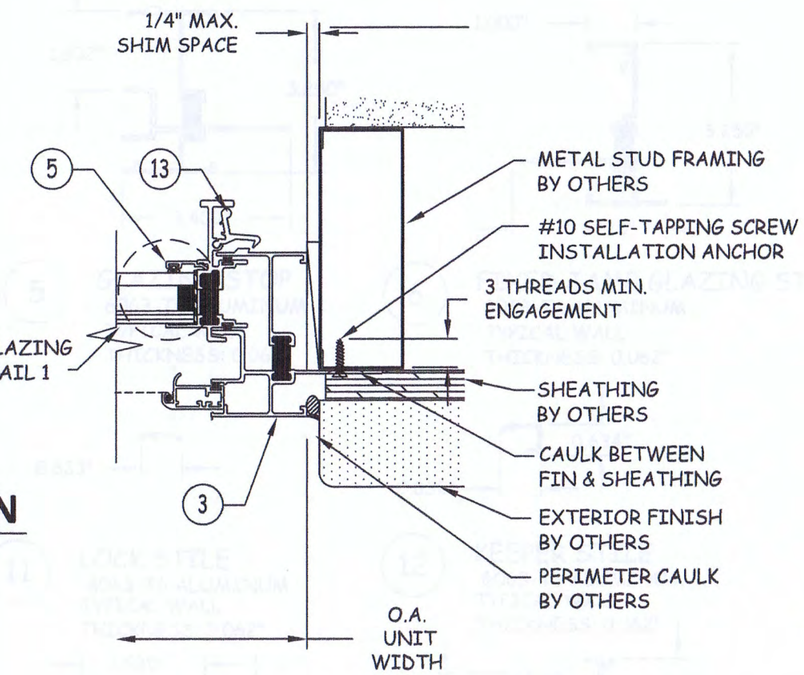

G/4 HORIZONTAL SECTION

JAMB - METAL STUD
HORIZONTAL SLIDER

QUAKER WINDOWS & DOORS
504 HIGHWAY 63 SOUTH
FREEBURG, MO 65582
PH: (651) 264-5150 FX: (651) 264-5485

TITLE: QUAKER 395 SL & 200 LOUVER HORIZONTAL SECTIONS & GLAZING DETAIL

PREPARED BY:
BUILDING DROPS
398 E. DANIA BEACH BLVD. STE 338
DANIA BEACH, FL 33004
PH: (954) 399-8478 FX: (954) 744-4738

REVISIONS

NO.	DESCRIPTION	BY	DATE

STATE OF TEXAS
ALEXIS SPYROU
102957
LICENSED
PROFESSIONAL ENGINEER
TEXAS REG. NO. 102957
BUILDING DROPS
398 E. DANIA BEACH BLVD. STE. 338
DANIA BEACH, FL 33004

P.2-3

DATE: 2.16.12	DWN BY: MSS	CHK BY: HFN	SCALE: NTS

DWG #: QWP006

SHEET: 4 OF 6

NO.	DESCRIPTION	MATERIAL	MANUFACTURER
1	HORIZONTAL SLIDER FRAME - SILL	ALUMINUM 6063-T6	QUAKER
2	HORIZONTAL SLIDER FRAME - HEAD	ALUMINUM 6063-T6	QUAKER
3	HORIZONTAL SLIDER FRAME - ACTIVE JAMB	ALUMINUM 6063-T6	QUAKER
4	HORIZONTAL SLIDER FRAME - FIXED JAMB	ALUMINUM 6063-T6	QUAKER
5	GLAZING STOP	ALUMINUM 6063-T6	QUAKER
6	FIXED JAMB GLAZING STOP	ALUMINUM 6063-T6	QUAKER
7	VINYL FILLER - FIXED PANEL	VINYL	QUAKER
8	VINYL TRACK	VINYL	QUAKER
9	SASH ROLLER	-	QUAKER
10	TOP/BOTTOM SASH RAIL	ALUMINUM 6063-T6	QUAKER
11	LOCK STILE	ALUMINUM 6063-T6	QUAKER
12	KEEPER STILE	ALUMINUM 6063-T6	QUAKER
13	GRAVITY LATCH	ALUMINUM 6063-T6	QUAKER
14	SETTING BLOCK	ALUMINUM 6063-T6	QUAKER
15	MEETING STILE REINFORCEMENT (3/16" X 1-1/4")	ALUMINUM 6063-T6	QUAKER
16	L-ANGLE (1-1/2" X 1-1/2" X 1/8"	ALUMINUM 6063-T6	QUAKER
17	L-ANGLE (1/4" X 1/4" X 1/16")	ALUMINUM 6063-T6	QUAKER
18	FRAME HEAD GASKET	FOAM	-
19	FRAME SILL GASKET	FOAM	-
20	LOUVER PW FRAME	ALUMINUM 6063-T6	QUAKER
21	LOUVER FRAME	ALUMINUM 6063-T6	QUAKER
22	LOUVER SUB-SILL W/ FIN	ALUMINUM 6063-T6	QUAKER
23	LOUVER STOP	ALUMINUM 6063-T6	QUAKER
24	BLANK-OFF PANEL - INBOARD SKIN	24 GA. GALV. STEEL	QUAKER
25	BLANK-OFF PANEL - OUTBOARD SKIN	16 GA. GALV. STEEL	QUAKER
26	LOUVER BLADES	ALUMINUM 6063-T6	QUAKER
27	PTAC MEETING RAIL/STILES	ALUMINUM 6063-T6	QUAKER
28	VERTICAL STRUT	ALUMINUM 6063-T6	QUAKER
29	VERTICAL STRUT BACKER	ALUMINUM 6063-T6	QUAKER
30	C-MULL	ALUMINUM 6063-T6	QUAKER
31	3/16" POP-RIVETS	-	-
32	CENTER BAR BRACKET	-	-
33	SASH LOCK	-	-
34	LATCH BOLT	-	-
35	SASH WOOL PILE WEATHER STRIP	-	-
36	GLAZING STOP WEATHER STRIP	-	-

1 FRAME-SILL
6063-T6 ALUMINUM
TYPICAL WALL
THICKNESS: 0.062"

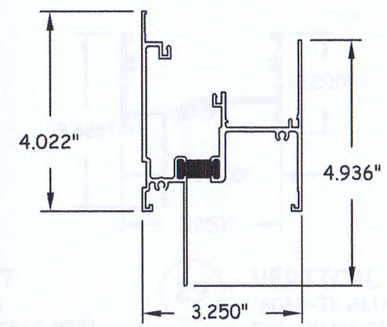

2 FRAME-HEAD
6063-T6 ALUMINUM
TYPICAL WALL
THICKNESS: 0.062"

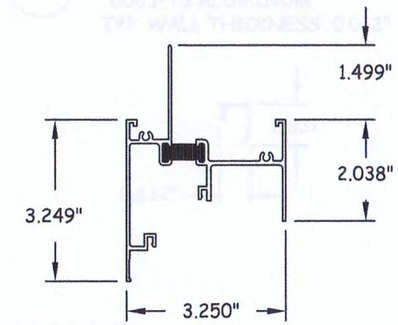

3 FRAME-ACTIVE JAMB
6063-T6 ALUMINUM
TYPICAL WALL
THICKNESS: 0.062"

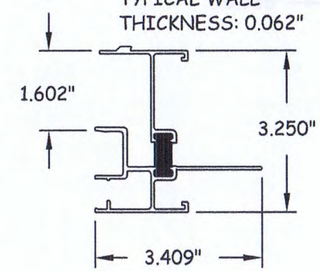

4 FRAME-FIXED JAMB
6063-T6 ALUMINUM
TYPICAL WALL
THICKNESS: 0.062"

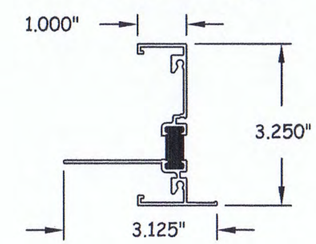

5 GLAZING STOP
6063-T6 ALUMINUM
TYPICAL WALL
THICKNESS: 0.062"

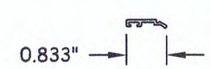

6 FIXED JAMB GLAZING STOP
6063-T6 ALUMINUM
TYPICAL WALL
THICKNESS: 0.062"

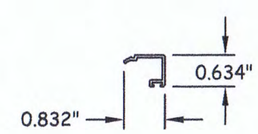

7 FILLER - FIXED PANEL
VINYL

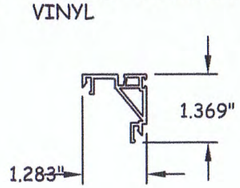

8 VINYL TRACK
VINYL

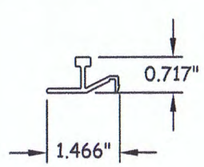

10 TOP/BOTTOM SASH RAIL
6063-T6 ALUMINUM
TYPICAL WALL
THICKNESS: 0.062"

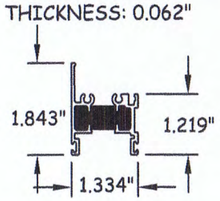

11 LOCK STILE
6063-T6 ALUMINUM
TYPICAL WALL
THICKNESS: 0.062"

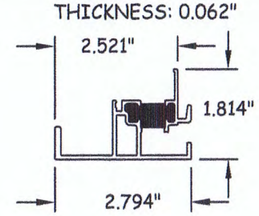

12 KEEPER STILE
6063-T6 ALUMINUM
TYPICAL WALL
THICKNESS: 0.062"

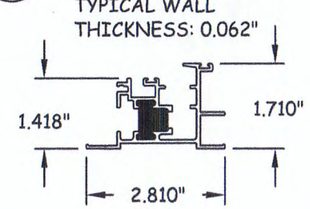

QUAKER WINDOWS & DOORS
504 HIGHWAY 63 SOUTH
FREEBURG, MO 65582
PH: (651) 264-5150 FX: (651) 264-5485

TITLE: QUAKER 395 SL & 200 LOUVER BILL OF MATERIALS & COMPONENTS

PREPARED BY:
BUILDING DROPS
398 E. DANIA BEACH BLVD. STE 338
DANIA BEACH, FL 33004
PH: (954) 399-8478 FX: (954) 744-4738

REVISIONS

NO.	DESCRIPTION	BY	DATE

STATE OF TEXAS
ALEXIS SPYROU
102957
LICENSED
PROFESSIONAL ENGINEER

8.273

DATE: 2.16.12
DWN BY: MSS
CHK BY: HFN
SCALE: NTS

DWG #: QWP006

SHEET: 5 OF 6

13 GRAVITY LATCH
6063-T6 ALUMINUM

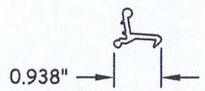

20 LOUVER PW FRAME
6063-T6 ALUMINUM
TYP. WALL THICKNESS: 0.062"

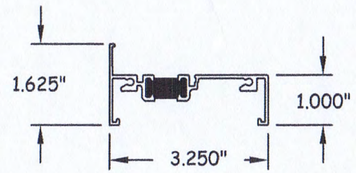

21 LOUVER FRAME
6063-T6 ALUMINUM
TYP. WALL THICKNESS: 0.062"

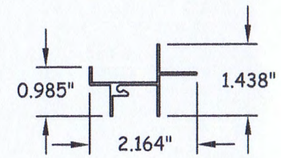

22 LOUVER SUB-SILL W/ FIN
6063-T6 ALUMINUM
TYP. WALL THICKNESS: 0.062"

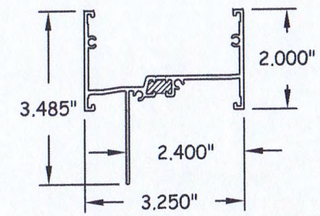

23 LOUVER STOP
6063-T6 ALUMINUM
TYP. WALL THICKNESS: 0.062"

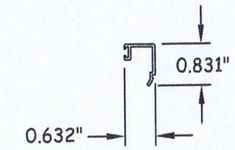

26 LOUVER BLADES
6063-T6 ALUMINUM

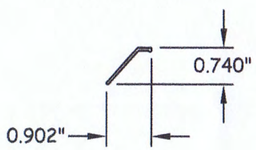

27 PTAC MEETING RAIL/STILE
6063-T6 ALUMINUM
TYP. WALL THICKNESS: 0.047"

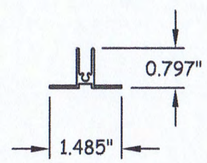

28 VERTICAL STRUT
6063-T6 ALUMINUM
TYP. WALL THICKNESS: 0.055"

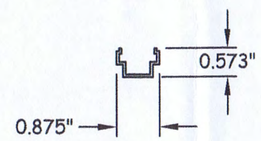

29 VERTICAL STRUT BACKER
6063-T6 ALUMINUM
TYP. WALL THICKNESS: 0.055"

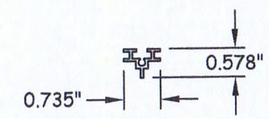

30 C-MULL
6063-T6 ALUMINUM
TYP. WALL THICKNESS: 0.062"

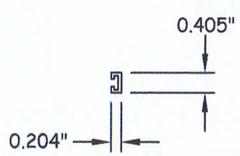

QUAKER WINDOWS & DOORS
504 HIGHWAY 63 SOUTH
FREEBURG, MO 65582
PH: (651) 264-5150 FX: (651) 264-5485

TITLE: QUAKER 395 SL & 200 LOUVER COMPONENTS

PREPARED BY:
BUILDING DROPS
398 E. DANIA BEACH BLVD. STE 338
DANIA BEACH, FL 33004
PH: (954) 399-8478 FX: (954) 744-4738

REVISIONS

NO.	DESCRIPTION	BY	DATE

STATE OF TEXAS
ALEXIS SPYROU
102957
LICENSED
PROFESSIONAL ENGINEER

ALEXIS SPYROU, P.E.
TEXAS LIC. #102957
398 E. DANIA BEACH BLVD. STE. 338
DANIA BEACH, FL 33004

6-2-13

DATE: 2.16.12	DWN BY: MSS	CHK BY: HFN	SCALE: NTS

DWG #: QWP006

SHEET: 6 OF 6