GENERAL NOTES:

1. ALL FASTENERS SHALL BE IN ACCORDANCE WITH THESE DRAWINGS. SPECIFIED ANCHOR EMBED TO BASE MATERIAL SHALL BE BEYOND WALL FINISH OR STUCCO.
2. OPENINGS, BUCKING & BUCKING FASTENERS MUST BE PROPERLY DESIGNED & INSTALLED TO TRANSFER WIND LOADS TO THE STRUCTURE.
3. THESE NON-IMPACT RATED WINDOW SYSTEM INSTALLATIONS ARE IN ACCORDANCE WITH AND MEET THE REQUIREMENTS OF THE INTERNATIONAL BUILDING CODE (IBC).
4. ALL ANCHORS SECURING WINDOW FRAME TO PRESSURE TREATED BUCKS OR WOOD FRAMING SHALL BE CAPABLE OF RESISTING CORROSION CAUSED BY THE PRESSURE TREATING CHEMICALS IN THE WOOD.
5. TO THE BEST OF OUR KNOWLEDGE, THE WINDOWS SHOWN HEREIN ARE CERTIFIED & QUALITY ASSURED BY A NATIONALLY ACCREDITED CERTIFICATION/QA ENTITY & SHALL BE LABELED IN ACCORDANCE WITH CERTIFICATION/QA ENTITIES SPECIFICATIONS. WINDOW ASSEMBLY IS NOT PART OF THIS DRAWING AND SHALL BE IN ACCORDANCE WITH THE MANUFACTURER'S QUALITY ASSURANCE SPECIFICATIONS & TESTING REPORTS.
6. CERTIFICATION OF THESE WINDOW INSTALLATIONS SHALL BE CONSIDERED VOID IF ANY OF THE FOLLOWING APPLY: 1) THEY ARE INSTALLED WITHOUT A BUILDING PERMIT FROM THE APPLICABLE LOCAL BUILDING DEPARTMENT. 2) IF THEY ARE INSTALLED BY ANYONE OTHER THAN A LICENSED CONTRACTOR EXPERIENCED WITH WINDOW INSTALLATIONS. 3) IF CHANGES HAVE OCCURRED TO THE PRODUCT'S CERTIFICATION ENTITY'S CERTIFICATE THAT CAUSE THESE INSTALLATIONS TO BE INCORRECT OR INCONSISTENT WITH WHAT HAS BEEN TESTED.
7. THE LEAST DESIGN PRESSURE SPECIFIED EITHER IN THIS DRAWING OR IN THE PRODUCTS CERTIFICATION SHALL CONTROL FOR THE INSTALLED WINDOW.
8. THESE DRAWINGS CERTIFY THE WINDOW INSTALLATION ONLY. WATER PROOFING OF THE INSTALLED WINDOWS IS NOT PART OF THIS INSTALLATION CERTIFICATION. THAT RESPONSIBILITY SHALL BE THAT OF THE MANUFACTURER &/OR INSTALLER.

ALTERNATE ANCHOR/SUBSTRATE EVALUATION NOTE:
ALL ALTERNATE ANCHORS IN THEIR SPECIFIED SUBSTRATES HAVE BEEN ANALYZED IN ACCORDANCE WITH THEIR APPLICABLE STANDARD(S) AND ARE FOUND TO BE EQUIVALENT TO OR STRONGER THAN THE ANCHOR(S) USED IN TESTING WITH THIS PRODUCT.

INSTALLATION EVALUATION IS BASED ON APPLICABLE ANCHOR STANDARDS AND/OR INFORMATION & RESULTS FROM APPLICABLE TEST REPORTS. THE BUILDING CODE VERSION CONSIDERED WITH THE EVALUATION WAS THAT IN FORCE AT THE TIME OF THE EVALUATION. IN THE EVENT OF CODE VERSION CHANGES/UPDATES OR IN THE EVENT THAT NEW OR ADDITIONAL TESTING IS COMPLETED ON THE REFERENCED PRODUCT, PRIOR TO STATING CODE COMPLIANCE, THE MANUFACTURER SHALL CONFIRM WITH THE INSTALLATION EVALUATION ENGINEER OF RECORD THAT THE INSTALLATIONS SPECIFIED HERE-IN ARE CURRENT WITH THE THEN CURRENT TESTING, CODE AND APPLICABLE STANDARDS.

FRAME ANCHOR REQUIREMENTS TABLE

OPENING TYPE (SUBSTRATE)	FRAME/CLIP/NAIL FIN TO OPENING FASTENER TYPE	MINIMUM EMBED	MINIMUM EDGE DIST.
FRAME SCREWS			
MIN. 2X4 WOOD FRAME OR BUCK (MIN. GR. 3 & G=0.55)	NO. 10 SMS OR WOOD SCREW	1 1/4"	3/4"
MIN. 18 GA. 33 KSI METAL STUD	NO. 10 GR. 5 SELF TAP/DRILL SCREW	FULL	1/2"
MIN. 1/8" THK A36 STEEL	NO. 10 GR. 5 SELF TAP/DRILL SCREW	FULL	1/2"
MIN. 1/8" THK 6063-T5 ALUM.	NO. 10 GR. 5 SELF TAP/DRILL SCREW	FULL	1/2"
MIN. C-90 CMU OR 2500 PSI CONCRETE	(1) 1/4" CONCRETE SCREW	1 1/4"	2"
INSTALLATION CLIP SCREWS			
MIN. 2X6 WOOD FRAME OR BUCK (MIN. GR. 3 & G=0.55)	NO. 8 X 1 1/2" SMS	1 3/8"	3/4"
MIN. 18 GA. 33 KSI METAL STUD	NO. 8 GR. 5 SELF TAP/DRILL SCREW	FULL	1/2"
MIN. 1/8" THK A36 STEEL	NO. 8 GR. 5 SELF TAP/DRILL SCREW	FULL	1/2"
MIN. 1/8" THK 6063-T5 ALUM.	NO. 8 GR. 5 SELF TAP/DRILL SCREW	FULL	1/2"
(2) NAILING FIN FASTENERS			
MIN. 2X4 WOOD FRAME OR BUCK (MIN. GR. 3 & G=0.55)	NO. 8 SMS SCREW	1 3/8"	1/2"
MIN. 2X4 WOOD FRAME OR BUCK (MIN. GR. 3 & G=0.55)	11 GA. ROOFING NAIL	1 7/8"	1/2"
MIN. 1/8" THK A36 STEEL	NO. 8 GR. 5 SELF TAP/DRILL SCREW	FULL	1/2"
MIN. 1/8" THK 6063-T5 ALUM.	NO. 8 GR. 5 SELF TAP/DRILL SCREW	FULL	1/2"

(1) CONCRETE SCREWS SHALL BE ELCO ULTRACONS, ELCO CRETE-FLEX, ITW RAMSET/RED HEAD TAPCONS OR HILTI KWIK-CON II (HARDENED STEEL OR S.S.).
(2) WHEN SCREWS ARE USED WITH THE NAIL FIN, THEY MUST BE A WAFFLE HEAD SCREW OR HAVE A FLAT WASHER AT THE SCREW HEAD.

EDGE DISTANCE MAY BE DECREASED TO 1/2" IF SCREWS ARE ANGLED 15 TO 20 DEGREES AWAY FROM THE EDGE.

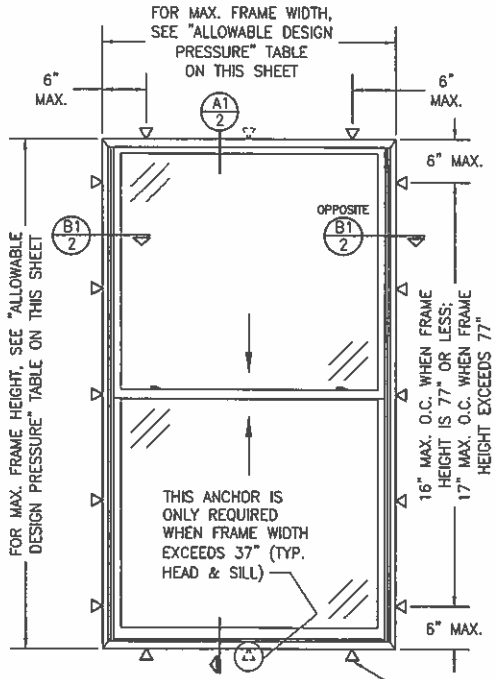

EXTERIOR ELEVATION: SINGLE WINDOW
SCALE: 3/4" = 1'-0"
(SCREW OR CLIP MOUNT CONDITION)

FRAME SCREWS OR INSTALLATION CLIPS WHERE SHOWN. SEE "FRAME ANCHOR REQUIREMENTS TABLE" ON THIS SHEET FOR REQUIREMENTS.

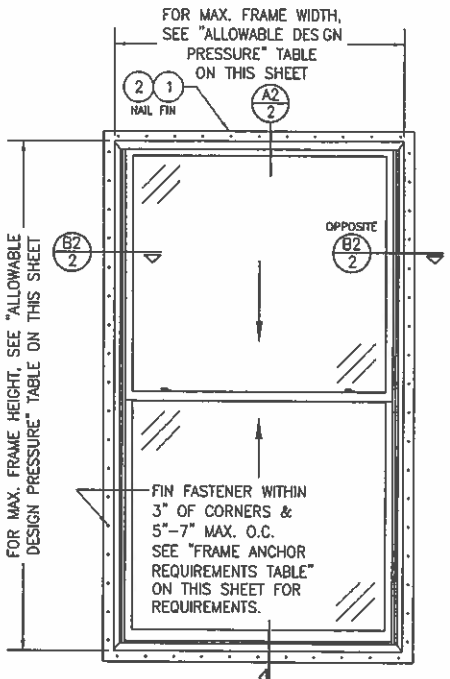

EXTERIOR ELEVATION: SINGLE WINDOW
SCALE: 3/4" = 1'-0"
(NAIL FIN MOUNT CONDITION)

ALLOWABLE DESIGN PRESSURE

MAX. FRAME WIDTH (IN.)	MAX. FRAME HEIGHT (IN.)	ALLOWABLE PRESSURE (+/- PSF)
37	77	50
41	71	50
45	65	50
48	59	50
48	77	45
48	84	40
48	96	30

CONDITIONS SHOWN ON THIS DRAWING ARE GOVERNED BY INSTALLATION REQUIREMENTS ONLY. THE GOVERNING CONDITIONS ON ANY SPECIFIC WINDOW SHALL BE THE LESSER OF THOSE SPECIFIED IN THE WINDOWS TDI APPROVAL OR THAT SHOWN IN THESE DRAWINGS.

THESE DRAWINGS ARE APPLICABLE ONLY TO THE PRODUCT SPECIFIED. THEY MAY NOT BE USED FOR THE ASSEMBLY AND/OR INSTALLATION OF ANY OTHER PRODUCT NOR MAY THEY BE USED FOR RATIONAL AND/OR LOCAL APPROVAL OF ANY PRODUCT NOT PRODUCED BY THE MANUFACTURER STATED ON THESE DRAWINGS.

DRAWN BY: W.R.M.	CHECKED BY: W.W.S.
PLOT: 1=1B	DATE: 11/06/14

NO.	REVISION DESCRIPTION	BY	DATE

DRAWING TITLE: ARCHITECT SERIES MODEL 5 NON-IMPACT ALUMINUM CLAD DOUBLE HUNG WINDOW

JOB INFORMATION: PELLA CORPORATION, 102 MAIN STREET, PELLA, IA 50219, 641-621-1000

CONSULTANTS: W. W. SCHAEFER ENGINEERING & CONSULTING, P.A. (REG. NO. F-14980), 7480 150TH COURT NORTH, PALM BEACH GARDENS, FL 33418, PHONE: 561-744-3424

CERTIFICATION: NOV 06 2014
WARREN W. SCHAEFER, P.E. P.E. NO. 113497

DRAWING NO. 1734T | REV.
SHEET NO. 1 OF 3

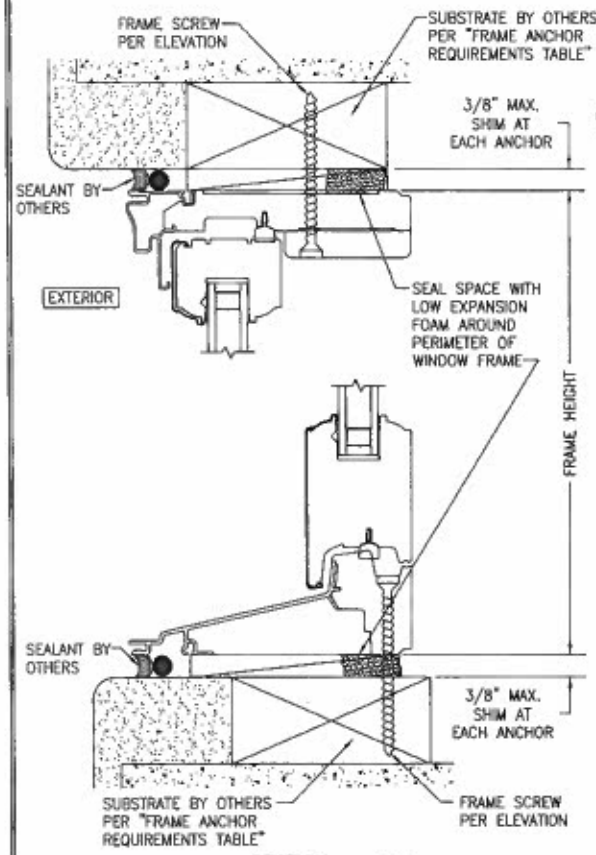

SECTION A1/2
SCALE: 1/2 FULL

FRAME SCREW MOUNT SHOWN. SEE DETAILS ON SHEET 3 FOR DIRECT MOUNT & CLIP MOUNT DETAILS.

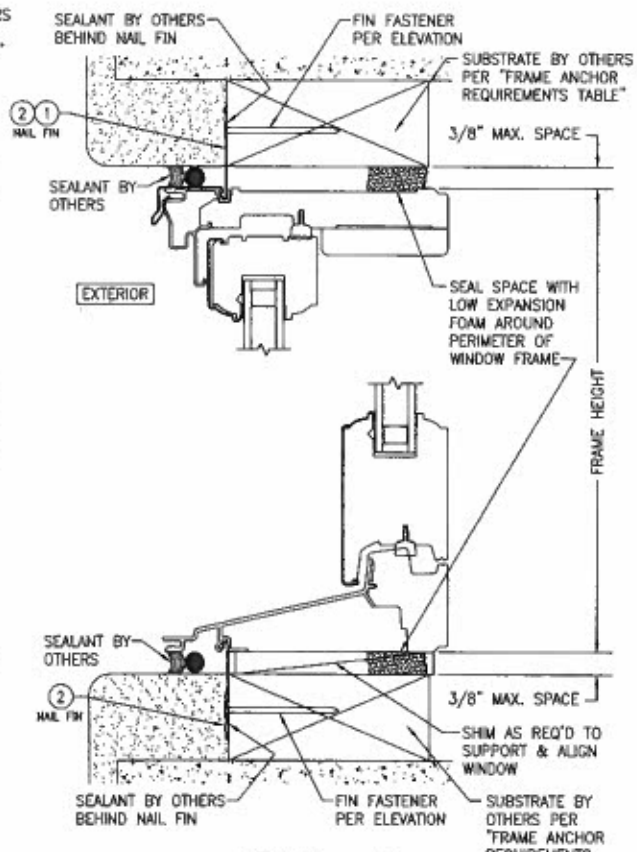

SECTION A2/2
SCALE: 1/2 FULL
(NAIL FIN MOUNT)

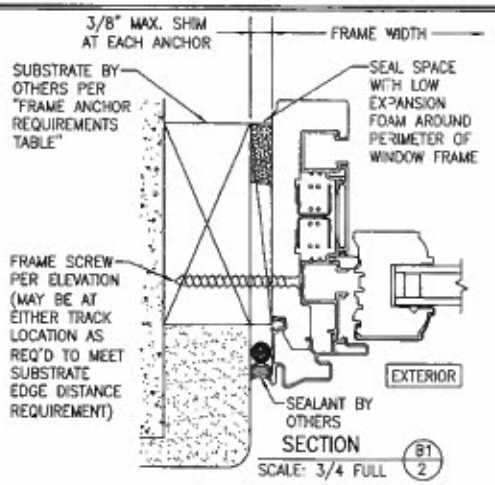

SECTION B1/2
SCALE: 3/4 FULL

FRAME SCREW MOUNT SHOWN. SEE DETAILS ON SHEET 3 FOR DIRECT MOUNT & CLIP MOUNT DETAILS.

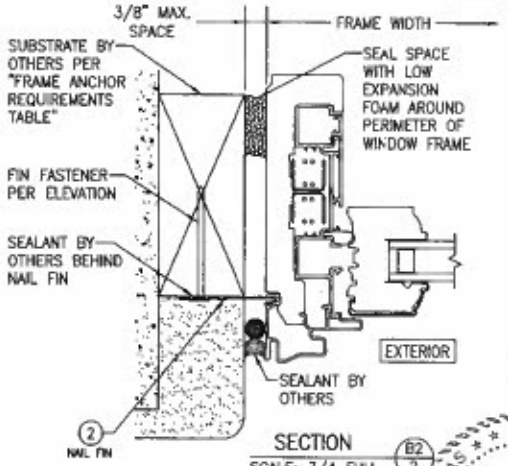

SECTION B2/2
SCALE: 3/4 FULL
(NAIL FIN MOUNT)

MO.	REVISION DESCRIPTION	BY	DATE

DRAWN BY: W.R.W. | CHECKED BY: W.W.S.
PLOT: 1=2 | DATE: 11/06/14

DRAWING TITLE: ARCHITECT SERIES MODEL 5 NON-IMPACT ALUMINUM CLAD DOUBLE HUNG WINDOW

JOB INFORMATION: PELLA CORPORATION
102 MAIN STREET
PELLA, IA 50219
641-621-1000

CONSULTANTS: W. W. SCHAEFER ENGINEERING & CONSULTING, P.A. (REG. NO. F-14980)
7480 150TH COURT NORTH
PALM BEACH GARDENS, FL 33418
PHONE: 561-744-3424

DRAFTING: W.R.W.
NOV 06 2014
WARREN W. SCHAEFER, P.E.
P.E. NO. 113497
STATE OF TEXAS
LICENSED PROFESSIONAL ENGINEER

DRAWING NO.: 17341
REV.:
SHEET NO.: 2 OF 3

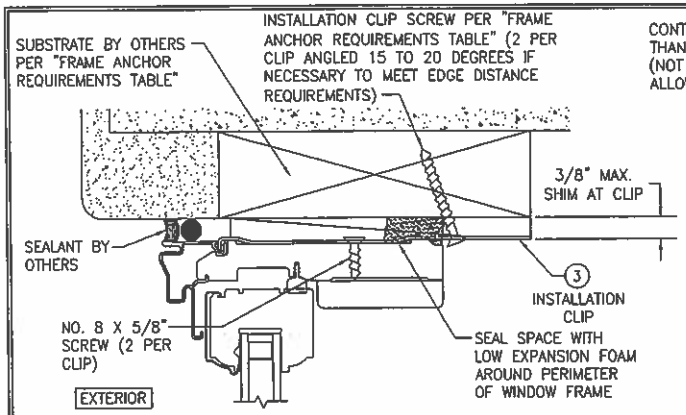

INSTALLATION CLIP DETAIL

(HEAD SECTION SHOWN; SILL & SIDES ARE INSTALLED THE SAME)
(FOR DETAIL NOT SHOWN, SEE OTHER SECTIONS)

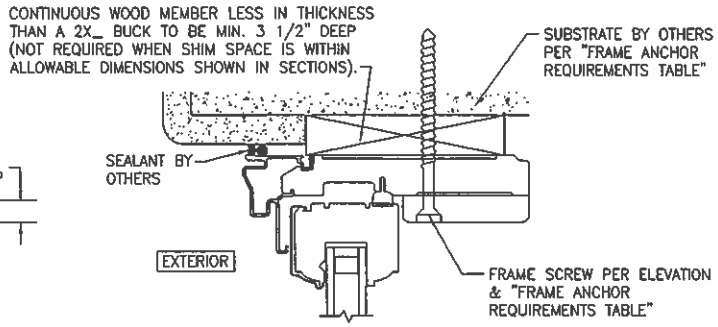

OPTIONAL DIRECT MOUNT DETAIL TO SUBSTRATE WITH SPACER

(HEAD SECTION SHOWN; SILL & SIDES ARE INSTALLED THE SAME)
(FOR DETAIL NOT SHOWN, SEE OTHER SECTIONS)

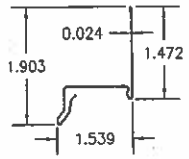

1 DRIP CAP NAIL FIN
(3003 H-14 ALUMINUM)

2 NAIL FIN
(3003 H-14 ALUMINUM)

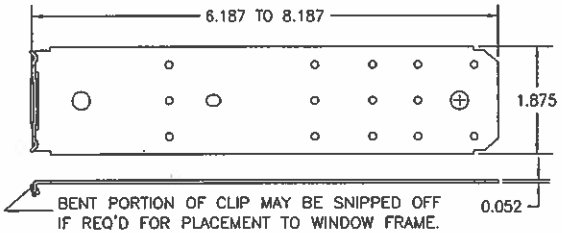

3 FRAME INSTALLATION CLIP
(50 KSI STEEL)

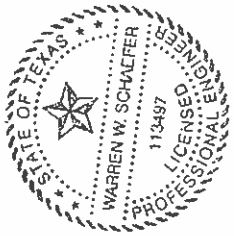

DRAWN BY: W.R.M.	CHECKED BY: W.W.S.
PLOT: 1=2	DATE: 11/06/14

NO.	REVISION DESCRIPTION	BY	DATE

DRAWING TITLE: ARCHITECT SERIES MODEL 5 NON-IMPACT ALUMINUM CLAD DOUBLE HUNG WINDOW

JOB INFORMATION: PELLA CORPORATION
102 MAIN STREET
PELLA, IA 50219
641-621-1000

CONSULTANTS: W. W. SCHAEFER ENGINEERING & CONSULTING, P.A. (REG. NO. F-14980)
7480 150TH COURT NORTH
PALM BEACH GARDENS, FL 33418
PHONE: 561-744-3424

CERTIFICATION: NOV 06 2014
WARREN W. SCHAEFER, P.E.
P.E. NO. 113497

DRAWING NO. 1734T
REV.
SHEET NO. 3 OF 3