STORM SMART INDUSTRIES

WIND ABATEMENT SYSTEM

INSTALLATION ANCHORAGE DETAILS FOR SLIDE, GROMMET & STRAP SCREENS - 100 PSF DESIGN PRESSURE

GENERAL NOTES:

1. PTC PRODUCT DESIGN GROUP, LLC HAS NO CONTROL OF THE MANUFACTURING, PERFORMANCE, OR INSTALLATION OF THIS PRODUCT. THESE GENERIC PLANS WERE ENGINEERED IN ACCORDANCE WITH ACCEPTED ENGINEERING PRACTICES AND TEST DATA PROVIDED BY THE MANUFACTURER.

2. THE WIND ABATEMENT SCREEN SYSTEM SHOWN ON THIS PRODUCT EVALUATION DOCUMENT HAS BEEN DESIGNED IN ACCORDANCE WITH THE 2006 INTERNATIONAL BUILDING CODE. DESIGN WIND LOADS SHALL BE DETERMINED AS PER SECTION 1609 OF THE ABOVE REFERENCED CODE, IN ACCORDANCE WITH ASCE 7–05, AND FOR A BASIC WIND SPEED AS REQUIRED BY THE JURISDICTION WHERE THE WIND ABATEMENT SCREEN SYSTEM WILL BE INSTALLED. THE WIND ABATEMENT SCREEN SYSTEM ADEQUACY FOR IMPACT, DEFLECTION AND FATIGUE RESISTANCE HAS BEEN VERIFIED IN ACCORDANCE WITH SECTION 1609.1.2 OF THE ABOVE REFERENCED CODE AND AS PER ASTM E330, E1886, & E1996 AT FENESTRATION TESTING LABORATORY, INC. PER THEIR REPORT (SEE LIST OF REPORTS).

3. LIMITATIONS OF USE:

   A. MAXIMUM SIZE: 100 PSF MAXIMUM PRESSURE
   MAXIMUM WIDTHS AND HEIGHTS SHOWN IN ELEVATIONS DRAWINGS ON THE FOLLOWING PAGES.

   B. IMPACT LEVEL: 9–1/4lb. LARGE MISSILE IMPACT LEVEL D

   C. ANCHORING OR LOADING CONDITIONS OTHER THAN THOSE SHOWN IN THESE DETAILS ARE NOT PART OF THIS APPROVAL.

   D. THIS PRODUCT CAN BE USED AS A WIND–BORNE DEBRIS SHUTTER PRODUCT.

4. IT SHALL BE THE RESPONSIBILITY OF THE CONTRACTOR TO VERIFY THAT THE EXISTING STRUCTURE IS DESIGNED TO SUPPORT THE MINIMUM LOADS SHOWN ON THE TABLES ON SHEET 3. EXISTING STRUCTURES NOT ABLE TO SUPPORT THESE LOADS SHALL BE EVALUATED AS A SITE SPECIFIC PROJECT. SEE NOTE 4 OF PRODUCT EVALUATION NOTES. INSTALLATIONS SHALL ACCOMMODATE SCREEN FABRIC DEFLECTIONS SHOWN IN "SCREEN FABRIC DEFLECTION (IN) VS. PRESSURE (PSF)" TABLE ON SHEET 2.

5. ALL ALUMINUM EXTRUSION SHALL BE 6063–T6 ALLOY (UNLESS OTHERWISE NOTED).

6. ALL SCREEN PANELS SHALL BE PERMANENTLY LABELED WITH AT LEAST ONE LABEL STATING:
   STORM SMART INDUSTRIES
   6182 IDLEWILD STREET, FORT MYERS, FL 33966
   TEXAS PRODUCT APPROVAL NO. #
   TEST STANDARDS
   OPENING No. #

7. FOR DETERMINING INTERNAL PRESSURE IN THE ABOVE REFERENCED CODES, THIS PRODUCT IS CLASSIFIED AS NON–POROUS, HAVING A POROSITY OF LESS THEN 10%, FOR THE CONDITIONS SHOWN IN THIS PRODUCT EVALUATION DOCUMENT. SCREEN PANELS MUST COMPLETELY COVER AN OPENING IN ALL DIRECTIONS.

8. THE SLIDE, GROMMET AND STRAP SCREENS SHALL BE STORED IN A DESIGNATED AND ACCESSIBLE AREA DURING NORMAL WEATHER CONDITIONS.

PRODUCT EVALUATION NOTES:

1. THIS PRODUCT EVALUATION DOCUMENT (P.E.D.) PREPARED BY THIS ENGINEER IS GENERIC AND DOES NOT PROVIDE INFORMATION FOR A SITE SPECIFIC PROJECT; i.e. WHERE THE SITE CONDITIONS DEVIATE FROM THE P.E.D.

2. CONTRACTOR TO BE RESPONSIBLE FOR THE SELECTION, PURCHASE AND INSTALLATION OF THIS PRODUCT BASED ON THIS PRODUCT EVALUATION PROVIDED AND SHALL NOT DEVIATE FROM THE CONDITIONS DETAILED ON THIS DOCUMENT.

3. THIS PRODUCT EVALUATION DOCUMENT WILL BE CONSIDERED INVALID IF ALTERED (i.e. HIGHLIGHTED, MARKED ETC.) BY ANY MEANS.

4. SITE SPECIFIC PROJECTS SHALL BE PREPARED BY A TEXAS LICENSED ENGINEER OR ARCHITECT WHICH WILL BECOME THE ENGINEER OF RECORD (E.O.R.) FOR THE PROJECT AND WHO WILL BE RESPONSIBLE FOR THE PROPER USE OF THE P.E.D. THE ENGINEER OF RECORD, ACTING AS A DELEGATED ENGINEER TO THE P.E.D. ENGINEER, SHALL SUBMIT SITE SPECIFIC DRAWINGS FOR REVIEW.

ANCHOR & FASTENING NOTES

1. ALL FASTENERS SHALL BE CORROSION RESISTANT COATED CARBON STEEL AS PER DIN 50018 OR STAINLESS STEEL 304 OR 316 SERIES WITH 50 KSI YIELD POINT AND 90 KSI ULTIMATE TENSILE STRENGTH.

2. NO EMBEDMENT INTO NON–STRUCTURAL COMPONENTS SUCH AS, STUCCO, TILE, SIDING, ETC. SHALL BE CONSIDERED AS PART OF THE EMBEDMENT.

3. THE ANCHOR SPACING ARE VALID FOR EDGE DISTANCES AND MINIMUM EMBEDMENT SHOWN IN THE FASTENER SCHEDULE ON SHEET 2. FOR EDGE DISTANCES LESS THAN SPECIFIED, THE ANCHOR SPACING SHALL BE REDUCED BY THE EDGE DISTANCE REDUCTION FACTORS SHOWN ON SHEET 2. THE EDGE DISTANCE SHALL NOT BE LESS THAN 1–1/4" IN CONCRETE, 1–9/16" IN CMU OR 1–9/16" IN WOOD, OR MINIMUM SPECIFIED BY THE MANUFACTURER. ANCHOR SPACING SHALL NOT BE LESS THAN 4". THE MINIMUM EDGE DISTANCE FOR THE 1/4"– 14 DRIL–FLEX SCREW IS 1/2". SCREWS IDENTIFIED AS 1/4" SELF–TAPPING SMS IN THIS DRAWING SHALL BE 1/4" –20 ELCO DRIL–FLEX STRUCTURAL DRILL SCREWS, EQUIVALENT OR BETTER.

TABLE OF CONTENTS

SHEET NO.	DESCRIPTION
1	NOTES, TABLE OF CONTENTS & DP TABLE
2	MATERIAL SPECS, FASTENER SCHEDULE, TEST REPORTS, STITCHING DETAILS, SCREEN DEFLECTIONS TABLE
3	LOADS ON EXISTING STRUCTURE
4	SLIDE SCREEN / ELEVATIONS & SECTIONS
5	SLIDE SCREEN / SECTIONS
6	SLIDE SCREEN / RAIL & TRACK ANCHOR SPACING & DP'S
7	SLIDE SCREEN / BUILD-OUTS ANCHOR SPACING & DP'S
8	SLIDE SCREEN / BUILD-INS ANCHOR SPACING & DP'S
9	SLIDE SCREEN / 2" BUILD-INS & 3/8" ANGLES ANCHOR SPACING & DP'S
10	GROMMET SCREEN / ELEVATIONS & SECTIONS
11	GROMMET SCREEN / ANCHOR SPACING & DP'S
12	GROMMET SCREEN / TRACKS, ANCHOR SPACING & DP'S
13	STRAP SCREEN / ELEVATIONS & SECTIONS
14	STRAP SCREEN / SECTIONS
15	STRAP SCREEN / ANCHOR SPACING & DP'S
16	STRAP SCREEN / ANCHOR SPACING & DP'S
17	STRAP SCREEN / ANCHOR SPACING & DP'S

DESIGN PRESSURE (PSF)

DIRECTION	PRESSURE (PSF)
POSITIVE	100
NEGATIVE	100

REV	DESCRIPTION	DATE	BY
A	PER EMAIL FROM TDI DATED 06/24/11	08/31/11	TJH

PROJECT #310-0802

STORM SMART INDUSTRIES
6182 IDLEWILD STREET
FORT MYERS, FL 33966

TITLE: WIND ABATEMENT SYSTEM NOTES, TABLE OF CONTENTS & DP TABLE

DRAWN BY: RJA
DATE: 12/14/10
SCALE: N.T.S.
DRAWING NO: SSI0002
REV: A
SHEET: 1 OF 17

PREPARED BY:
PTC PRODUCT DESIGN GROUP, LLC
P.O. Box 520775
Longwood, FL 32752-0775
Texas Cert. of Reg. No. F-13740
Phone: 321.690.1788
Fax: 321.690.1789
Email: info@ptc-corp.com

Robert J. Amoruso, P.E.
Texas P.E. No. 80817

STATE OF TEXAS
ROBERT JAMES AMORUSO
80817
LICENSED
PROFESSIONAL ENGINEER
8/31/11

FABRIC SPECIFICATION:

FIBER CONTENT: 100% POLYPROPYLENE
CONSTRUCTION: 3/4 BASKET–WEAVE, WARP – 60 ENDS PER INCH, WERE – 50 ENDS PER INCH
FINISH: CALENDARED
WEIGHT (ASTM D–3776): 7.6 –OZ/SQUARE YARD
SELVAGE: HEAT CUT OR WOVEN
TENSILE STRENGTH (GRAB METHOD, ASTM D – 4632): WARP – 540 lbs., WEFT – 425 lbs.
BURST STRENGTH (ASTM D – 3786): 825 PSI
TEAR STRENGTH (ASTM D – 4533): WARP – 200 lbs., WEFT – 170 lbs.
ABRASION RESISTANCE (ASTM D – 4886): 95% STRENGTH RETAINED
PUNCTURE STRENGTH (ASTM D – 4833): 190 lbs.
AIR FLOW: 230 CFM
UV RETENTION (ASTM D–G154): 90%

SEWING:

SLIDE SCREEN RAIL EDGES: 3 SINGLE ROWS OF STRAIGHT STITCH AT INTERVALS OF 1/4" USING A MINIMUM OF 138 DENIER POLYESTER THREAD (SEE STITCHING DETAIL AT RIGHT)

OTHER SCREEN EDGES: 3 SINGLE ROWS OF STRAIGHT STITCH AT INTERVALS OF 1 1/2" USING A MINIMUM OF 138 DENIER POLYESTER THREAD (SEE STITCHING DETAIL AT RIGHT)

EDGES:

3 1/2" QUAD FOLDED ALL AROUND THE PERIMETER WITH CONTINUOUS SEWING

GROMMETS:

#3 NICKEL PLATED BRASS GROMMETS PLACED AT 1 1/4" FROM THE EDGE OF SCREEN

STRAP:

PATTERN: X100–1000
WIDTH/DIAMETER: 1.875" +/– .063
THICKNESS: .050" +/– .010
AVERAGE BREAK STRENGTH: 5000 LB
MATERIAL: POLYESTER

BUCKLE:

PATTERN: SPIKE TEETH GRIP
WIDTH/DIAMETER: 2.5" +/– .10
MATERIAL: ACETAL

BRACKET:

PATTERN: BENT PLATE
DIMENSIONS: 4.0" X .75" X .10"
HOLE SIZE: .31"ø
MATERIAL: 304 STAINLESS STEEL

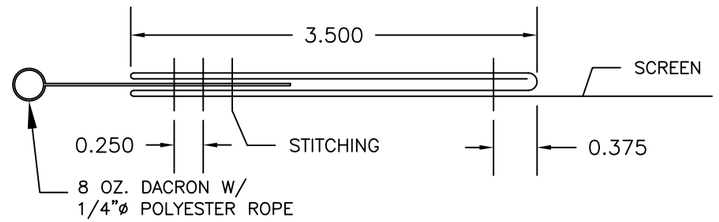

STITCHING DETAIL

SIDE RAIL AND WEIGHT EDGES - N.T.S.

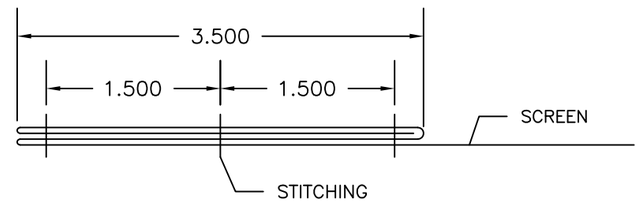

STITCHING DETAIL

OTHER SCREEN EDGES - N.T.S.

LIST OF REPORTS

FENESTRATION TESTING LABORATORY, INC.

LABORATORY No. 6074
DATE: 9/10/2009
PROJECT No. 09–1644
FILE No. 09–665
TEST PROTOCOL: ASTM E330, ASTM E1886, ASTM E1996
MAXIMUM WIDTH TESTED: 159.75"
DESIGN PRESSURE TESTED: 100 PSF
STRUCTURAL LOAD TESTED: 150 PSF

SCREEN FABRIC DEFLECTION (IN) VS. PRESSURE (PSF)

PRESSURE (PSF)	SCREEN FABRIC SPAN (FEET)					
	13	10	8	6	4	3
100	26.6	20.5	16.4	12.3	8.2	6.1
95	25.8	19.8	15.9	11.9	7.9	5.9
90	25.0	19.2	15.4	11.5	7.7	5.8
85	24.1	18.6	14.9	11.1	7.4	5.6
80	23.3	17.9	14.4	10.8	7.2	5.4
75	22.5	17.3	13.8	10.4	6.9	5.2
70	21.7	16.7	13.3	10.0	6.7	5.0
65	20.9	16.0	12.8	9.6	6.4	4.8
60	20.0	15.4	12.3	9.2	6.2	4.6
55	19.2	14.8	11.8	8.9	5.9	4.4
50	18.4	14.2	11.3	8.5	5.7	4.2
45	17.6	13.5	10.8	8.1	5.4	4.1
40	16.8	12.9	10.3	7.7	5.2	3.9
35	15.9	12.3	9.8	7.4	4.9	3.7
30	15.1	11.6	9.3	7.0	4.7	3.5
25	14.3	11.0	8.8	6.6	4.4	3.3
20	13.5	10.4	8.3	6.2	4.1	3.1
15	12.7	9.7	7.8	5.8	3.9	2.9
10	11.8	9.1	7.3	5.5	3.6	2.7

1) SCREEN FABRIC SPAN IS MEASURED BETWEEN SUPPORTS.
2) FOR PRESSURE OR SPANS BETWEEN VALUES SHOWN, DEFLECTION CAN BE INTERPOLATED.

SEE "ANCHOR & FASTENING NOTE 3 ON SHEET 1

ANCHOR	CONC. & FILLED CMU (3500 PSI) & (2500 PSI) *		HOLLOW CMU (1800 PSI)*		WOOD (S.G. = .55)*	
	MIN. EDGE	MIN. EMB.	MIN. EDGE	MIN. EMB.	MIN. EDGE	MIN. EMB.
1/4" ELCO ULTRACON HFH	1 1/4"	1 1/4"	1 1/4"	1 1/4"	1 3/4"	1 1/2"
5/16" ELCO ULTRACON HFH	3 1/8"	1 3/4"	3 1/8"	1 1/4"	2"	1 9/16"
1/4"-20 ELCO PANELMATE INSERT W/SIDEWALK BOLT	4"	1 5/8"	3 1/2"	1 1/4"	3/4"	1 5/8"
3/8"-16 ITW MULTI-SET II DROP-IN ANCHORS	2 7/8"	1 5/8"	NR	NR	NR	NR
3/8"-16 POWERS CALK-IN ANCHORS	5 1/4"	1 1/4"	NR	NR	NR	NR
3/8"-16 POWERS STEEL DROPIN ANCHORS	5 1/4"	1 9/16"	NR	NR	NR	NR
1/4" ELCO PANELMATE PRO, PLUS, FEMALE, & TVAS	2 1/2"	1 3/4"	3"	1 1/4"	2"	1 7/8"
1/4" ITW SAMMYS & STORM GUARD	2 1/2"	2 1/4"	2 1/2"	1 1/4"	NR	NR
1/4"-20 SIDEWALK BOLT W/ ALL POINTS BRASS BUSHING	NR	NR	NR	NR	3/4"	7/8"
1/4"-20 POWERS CALK-IN W/SIDEWALK BOLT	3 1/2"	7/8"	NR	NR	NR	NR
3/8" EYE-BOLT W/ POWERS DROPIN	5 1/4"	1 9/16"	NR	NR	NR	NR
3/8" EYE-BOLT W/ POWERS CALK-IN & LAG	5 1/4"	1 1/4"	NR	NR	NR	NR
3/8" EYE-BOLT W/ ITW MULTI-SET II	2 7/8"	1 5/8"	NR	NR	NR	NR
1/2" EYE-BOLT W/ POWERS DROPIN	7"	2"	NR	NR	NR	NR
1/2" EYE-BOLT W/ POWERS CALK-IN & LAG	7"	1 1/2"	NR	NR	NR	NR
1/2" EYE-BOLT W/ ITW MULTI-SET II	3 1/2"	2"	NR	NR	NR	NR
(2) 1/4" ELCO ULTRACON HFH	1 1/4"	1 1/4"	1 1/4"	1 1/4"	1 3/4"	1 1/2"
(2) 5/16" ELCO ULTRACON HFH	3 1/8"	1 3/4"	3 1/8"	1 1/4"	2"	1 9/16"
(2) 1/4"-20 ELCO PANELMATE INSERT W/SIDEWALK BOLT	4"	1 5/8"	3 1/2"	1 1/4"	3/4"	1 5/8"

* UNLESS OTHERWISE NOTED IN ANCHOR TABLES. NR - NOT RECOMMENDED

EDGE DISTANCE REDUCTION FACTORS FOR ANCHOR SPACING

EDGE DISTANCE	10d	9d	8d	7d	6d	5d	4d	3d
REDUCTION FACTOR - HOLLOW CMU	1	0.9	0.8	0.7	0.6	0.5	0.4	0.3
REDUCTION FACTOR - CONCRETE	1	0.9	0.8	0.7	0.59	0.49	0.39	0.29

PROJECT #310-0802

REV	DESCRIPTION	DATE	BY
A	PER EMAIL FROM TDI DATED 06/24/11	08/31/11	TJH

STORM SMART INDUSTRIES
6182 IDLEWILD STREET
FORT MYERS, FL 33966

TITLE: WIND ABATEMENT SYSTEM
MATERIAL SPECS, FASTENER SCHEDULE, TEST REPORTS, ETC.

PREPARED BY:

PTC PRODUCT DESIGN GROUP, LLC
P.O. Box 520775
Longwood, FL 32752-0775
Texas Cert. of Reg. No. F-13740
Phone: 321.690.1788
Fax: 321.690.1789
Email: info@ptc-corp.com

DRAWN BY: RJA
DATE: 12/14/10
SCALE: N.T.S.
DRAWING NO: SSI0002
REV: A
SHEET: 2 OF 17

Robert J. Amoruso, P.E.
Texas P.E. No. 80817

STATE OF TEXAS
ROBERT JAMES AMORUSO
80817
LICENSED
PROFESSIONAL ENGINEER
8/31/11

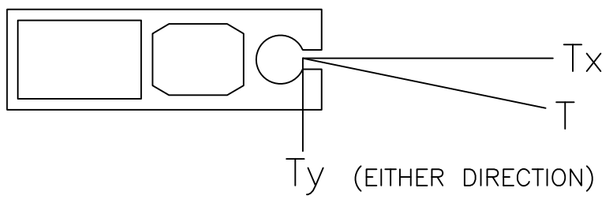

LOADS ON EXISTING STRUCTURE

SLIDE, GROMMET, & STRAP INSTALLATIONS

NOTE: SLIDE, GROMMET & STRAP SCREEN LOADS APPLIED ALONG ANCHOR LINE. SCREEN TRACK SLIDE RAIL SHOWN ABOVE FOR ILLUSTRATION.

FOR PRESSURES OR SPANS BETWEEN VALUES SHOWN, LOADS ON EXISTING STRUCTURE CAN BE INTERPOLATED.

LOADS ON EXISTING STRUCTURE FROM SCREEN SYSTEM
T_X = PARALLEL LOADS (PLF)

SCREEN	PRESSURE (PSF)														
SPAN (ft)	100	95	90	85	80	75	70	65	60	55	50	45	40	35	30
3'-0"	220	216	211	206	201	195	189	182	175	167	159	150	140	128	116
3'-6"	257	252	246	240	234	228	220	213	204	195	185	175	163	150	135
4'-0"	293	287	281	275	268	260	252	243	234	223	212	200	186	171	155
4'-6"	330	323	316	309	301	293	283	273	263	251	238	225	209	193	174
5'-0"	367	359	352	343	334	325	315	304	292	279	265	250	233	214	193
5'-6"	403	395	387	378	368	358	346	334	321	307	291	275	256	235	213
6'-0"	440	431	422	412	401	390	378	365	350	335	318	299	279	257	232
6'-6"	477	467	457	446	435	423	409	395	379	363	344	324	303	278	251
7'-0"	513	503	492	481	468	455	441	425	409	391	371	349	326	300	271
7'-6"	550	539	527	515	502	488	472	456	438	419	397	374	349	321	290
8'-0"	586	575	563	549	535	520	504	486	467	446	424	399	372	343	310
8'-6"	623	611	598	584	569	553	535	516	496	474	450	424	396	364	329
9'-0"	660	647	633	618	602	585	567	547	525	502	477	449	419	385	348
9'-6"	696	683	668	652	636	618	598	577	555	530	503	474	442	407	368
10'-0"	733	719	703	687	669	650	630	608	584	558	530	499	465	428	387
10'-6"	770	755	738	721	702	683	661	638	613	586	556	524	489	450	406
11'-0"	806	790	773	755	736	715	693	668	642	614	583	549	512	471	426
11'-6"	843	826	809	790	769	748	724	699	671	642	609	574	535	492	445
12'-0"	880	862	844	824	803	780	756	729	701	670	636	599	558	514	464
12'-6"	916	898	879	858	836	813	787	760	730	698	662	624	582	535	484
13'-0"	953	934	914	893	870	845	819	790	759	725	689	649	605	557	503

LOADS ON EXISTING STRUCTURE FROM SCREEN SYSTEM
T_Y = PERPENDICULAR LOADS (PLF)

SCREEN	PRESSURE (PSF)														
SPAN (ft)	100	95	90	85	80	75	70	65	60	55	50	45	40	35	30
3'-0"	150	143	135	128	120	113	105	98	90	83	75	68	60	53	45
3'-6"	175	166	158	149	140	131	123	114	105	96	88	79	70	61	53
4'-0"	200	190	180	170	160	150	140	130	120	110	100	90	80	70	60
4'-6"	225	214	203	191	180	169	158	146	135	124	113	101	90	79	68
5'-0"	250	238	225	213	200	188	175	163	150	138	125	113	100	88	75
5'-6"	275	261	248	234	220	206	193	179	165	151	138	124	110	96	83
6'-0"	300	285	270	255	240	225	210	195	180	165	150	135	120	105	90
6'-6"	325	309	293	276	260	244	228	211	195	179	163	146	130	114	98
7'-0"	350	333	315	298	280	263	245	228	210	193	175	158	140	123	105
7'-6"	375	356	338	319	300	281	263	244	225	206	188	169	150	131	113
8'-0"	400	380	360	340	320	300	280	260	240	220	200	180	160	140	120
8'-6"	425	404	383	361	340	319	298	276	255	234	213	191	170	149	128
9'-0"	450	428	405	383	360	338	315	293	270	248	225	203	180	158	135
9'-6"	475	451	428	404	380	356	333	309	285	261	238	214	190	166	143
10'-0"	500	475	450	425	400	375	350	325	300	275	250	225	200	175	150
10'-6"	525	499	473	446	420	394	368	341	315	289	263	236	210	184	158
11'-0"	550	523	495	468	440	413	385	358	330	303	275	248	220	193	165
11'-6"	575	546	518	489	460	431	403	374	345	316	288	259	230	201	173
12'-0"	600	570	540	510	480	450	420	390	360	330	300	270	240	210	180
12'-6"	625	594	563	531	500	469	438	406	375	344	313	281	250	219	188
13'-0"	650	618	585	553	520	488	455	423	390	358	325	293	260	228	195

LOADS ON EXISTING STRUCTURE FROM SCREEN SYSTEM
RESULTANT (T) = SCREEN TENSION (PLF)

SCREEN	PRESSURE (PSF)														
SPAN (ft)	100	95	90	85	80	75	70	65	60	55	50	45	40	35	30
3'-0"	266	258	250	242	234	225	216	207	197	187	176	164	152	139	124
3'-6"	311	301	292	283	273	263	252	241	230	218	205	192	177	162	145
4'-0"	355	345	334	323	312	300	288	276	263	249	234	219	203	185	166
4'-6"	399	388	376	363	351	338	324	310	295	280	264	246	228	208	187
5'-0"	444	431	417	404	390	375	360	345	328	311	293	274	253	231	207
5'-6"	488	474	459	444	429	413	396	379	361	342	322	301	279	254	228
6'-0"	532	517	501	485	468	450	432	413	394	373	352	329	304	278	249
6'-6"	577	560	543	525	507	488	468	448	427	404	381	356	329	301	270
7'-0"	621	603	584	565	546	525	504	482	459	435	410	383	355	324	290
7'-6"	666	646	626	606	585	563	540	517	492	467	439	411	380	347	311
8'-0"	710	689	668	646	624	600	576	551	525	498	469	438	405	370	332
8'-6"	754	732	710	686	663	638	612	586	558	529	498	465	431	393	353
9'-0"	799	775	751	727	701	675	648	620	591	560	527	493	458	416	373
9'-6"	843	818	793	767	740	713	684	655	624	591	557	520	481	439	394
10'-0"	887	861	835	808	779	750	720	689	656	622	586	548	507	463	415
10'-6"	932	904	877	848	818	788	756	724	689	653	615	575	532	486	436
11'-0"	976	948	918	888	857	825	792	758	722	684	644	602	557	509	456
11'-6"	1020	991	960	929	896	863	828	792	755	715	674	630	583	532	477
12'-0"	1065	1034	1002	969	935	901	864	827	788	747	703	657	608	555	498
12'-6"	1109	1077	1044	1009	974	938	900	861	821	778	732	684	633	578	519
13'-0"	1154	1120	1085	1050	1013	976	936	896	853	809	762	712	659	601	539

PROJECT #310-0802

REV	DESCRIPTION	DATE	BY
A	PER EMAIL FROM TDI DATED 06/24/11	08/31/11	TJH

STORM SMART INDUSTRIES
6182 IDLEWILD STREET
FORT MYERS, FL 33966

TITLE: WIND ABATEMENT SYSTEM LOADS ON EXISTING STRUCTURE

DRAWN BY: RJA
DATE: 12/14/10
SCALE: N.T.S.
DRAWING NO: SSI0002
REV: A
SHEET: 3 OF 17

PREPARED BY:
PTC PRODUCT DESIGN GROUP, LLC
P.O. Box 520775
Longwood, FL 32752-0775
Texas Cert. of Reg. No. F-13740
Phone: 321.690.1788
Fax: 321.690.1789
Email: info@ptc-corp.com

Robert J. Amoruso, P.E.
Texas P.E. No. 80817

STATE OF TEXAS
ROBERT JAMES AMORUSO
80817
LICENSED
PROFESSIONAL ENGINEER
8/31/11

SLIDE SCREEN INSTALLATIONS

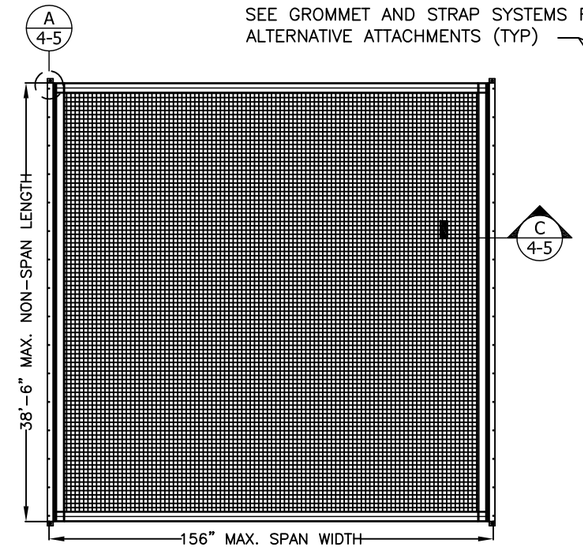

SLIDE SCREEN SINGLE PANEL - ELEVATION

TYPICAL 2 SIDED ATTACHMENT - VERTICAL OR HORIZONTAL INSTALLATION - N.T.S.

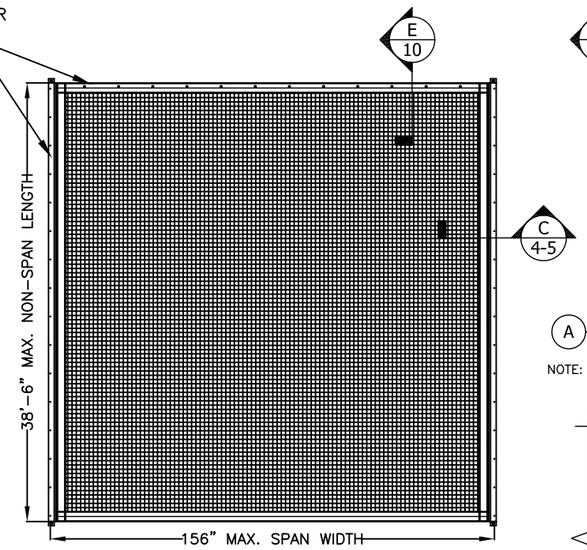

SLIDE SCREEN SINGLE PANEL - ELEVATION

3 OR 4 SIDED ATTACHMENT -VERTICAN OR HORIZONTAL INSTALLATION - SCALE N.T.S.

NOTE: FOR 4 SIDED ATTACHMENT THE SPAN IS IN THE SHORT DIMENSION BEWTEEN FASTENERS.

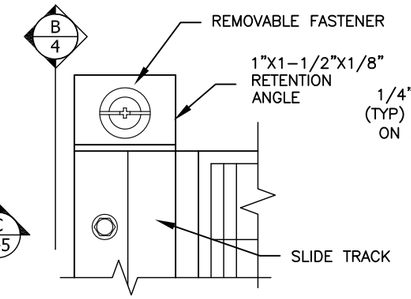

A RETENTION ANGLE - DETAIL

SLIDE TRACK INSTALLATION (OPTION 1) - N.T.S.

NOTE: THE RETENTION ANGLES ARE NOT REQUIRED WHERE THE SLIDE SCREEN TRACK ENDS ARE AGAINST THE EXISTING STRUCTURE.

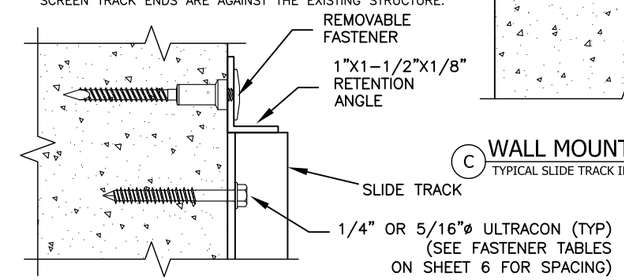

B RETENTION ANGLE - SECTION

SLIDE TRACK INSTALLATION - N.T.S.

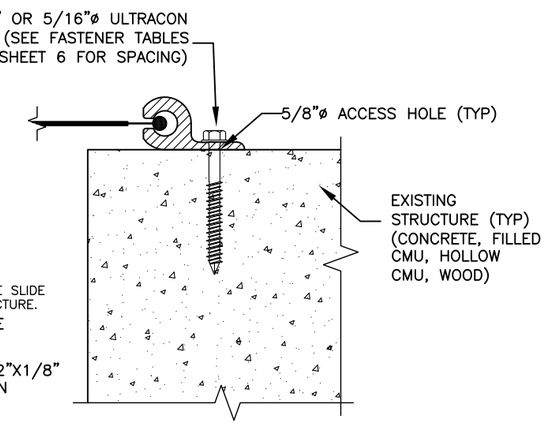

C WALL MOUNT - SECTION

TYPICAL SLIDE TRACK INSTALLATION (OPTION 1) - N.T.S.

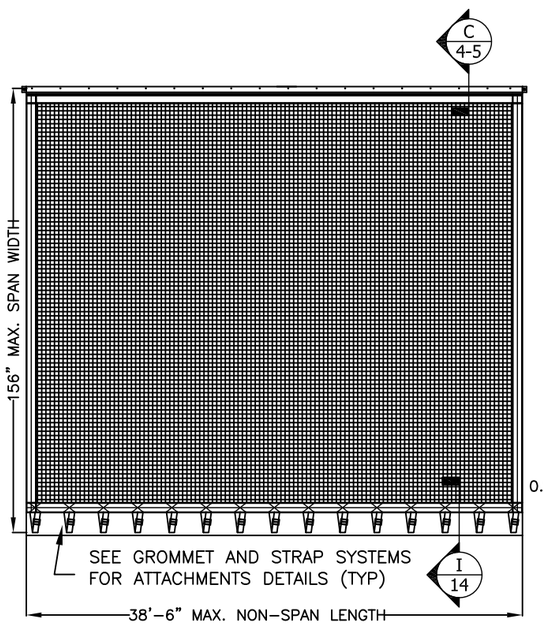

EASY SCREEN SINGLE PANEL - ELEVATION

TYPICAL 2 SIDED ATTACHMENT - VERTICAL OR HORIZONTAL INSTALLATION - N.T.S.

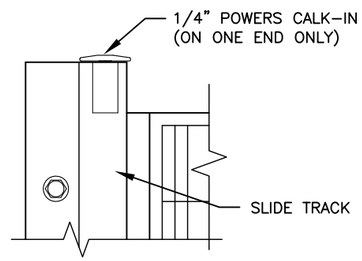

A RETENTION ANCHOR - DETAIL

SLIDE TRACK INSTALLATION (OPTION 2)- N.T.S.

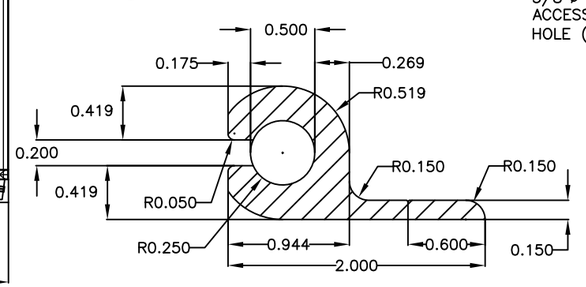

2" SLIDE RAIL TRACK

6063-T6 ALUMINUM - SCALE: 1:1

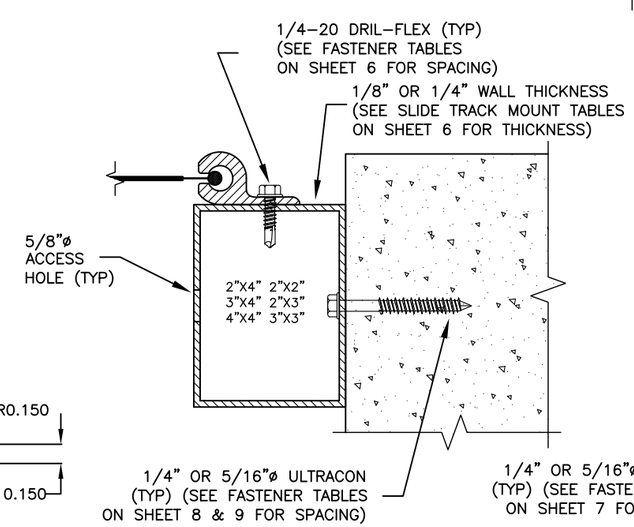

C BUILD-IN MOUNT - SECTION

SLIDE TRACK INSTALLATION (OPTION 2) - N.T.S.

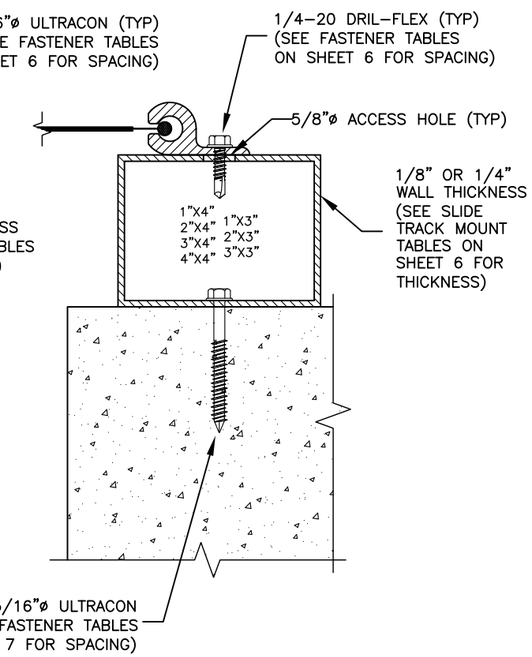

C BUILD-OUT MOUNT - SECTION

SLIDE TRACK INSTALLATION (OPTION 3) - N.T.S.

REV	DESCRIPTION	DATE	BY
	PROJECT #310-0802		
A	PER EMAIL FROM TDI DATED 06/24/11	08/31/11	TJH

STORM SMART INDUSTRIES
6182 IDLEWILD STREET
FORT MYERS, FL 33966

TITLE: WIND ABATEMENT SYSTEM
SLIDE SCREEN / ELEVATIONS & SECTIONS

DRAWN BY: RJA
DATE: 12/14/10
SCALE: N.T.S.
DRAWING NO: SSI0002
REV: A
SHEET: 4 OF 17

PREPARED BY:
PTC PRODUCT DESIGN GROUP, LLC
P.O. Box 520775
Longwood, FL 32752-0775
Texas Cert. of Reg. No. F-13740
Phone: 321.690.1788
Fax: 321.690.1789
Email: info@ptc-corp.com

Robert J. Amoruso, P.E.
Texas P.E. No. 80817

STATE OF TEXAS
ROBERT JAMES AMORUSO
80817
LICENSED
PROFESSIONAL ENGINEER
8/31/11

SLIDE SCREEN INSTALLATIONS

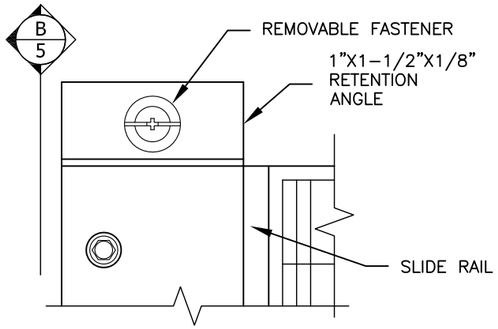

A RETENTION ANGLE - DETAIL
SIDE RAIL INSTALLATION (OPTION 1) - N.T.S.

NOTE: THE RETENTION ANGLES ARE NOT REQUIRED WHERE THE SLIDE SCREEN TRACK ENDS ARE AGAINST THE EXISTING STRUCTURE.

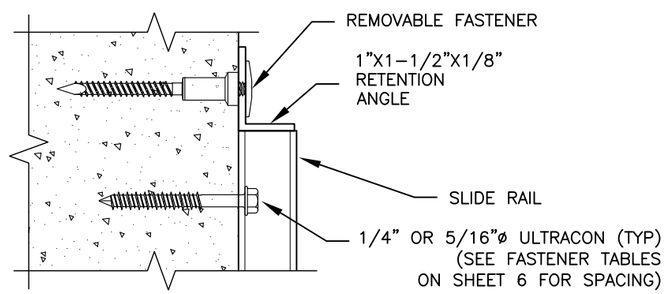

B RETENTION ANGLE - SECTION
SIDE RAIL INSTALLATION (OPTION 1) - N.T.S.

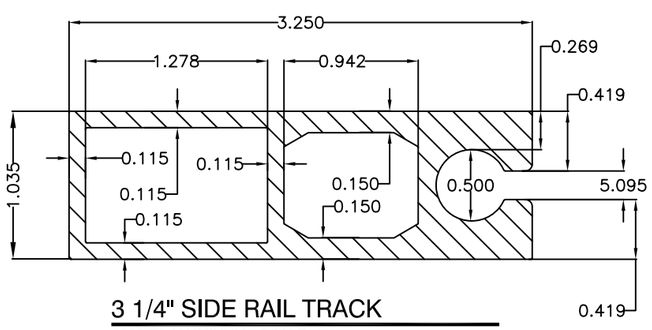

3 1/4" SIDE RAIL TRACK
6063-T6 ALUMINUM - SCALE: 1:1

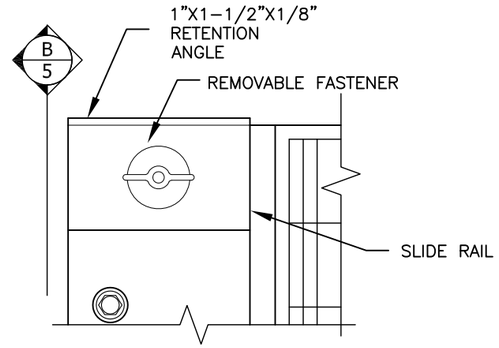

A RETENTION ANGLE - DETAIL
SIDE RAIL INSTALLATION (OPTION 2) - N.T.S.

NOTE: THE RETENTION ANGLES ARE NOT REQUIRED WHERE THE SLIDE SCREEN TRACK ENDS ARE AGAINST THE EXISTING STRUCTURE.

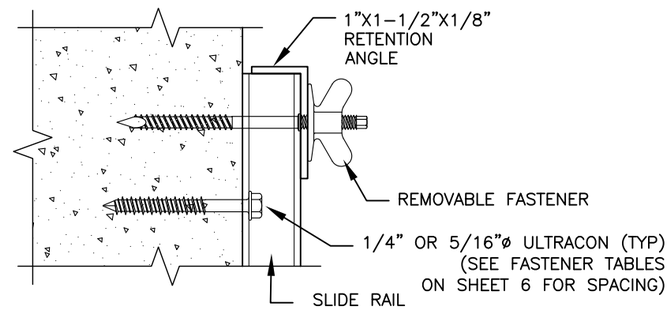

B RETENTION ANGLE - SECTION
SIDE RAIL INSTALLATION (OPTION 2) - N.T.S.

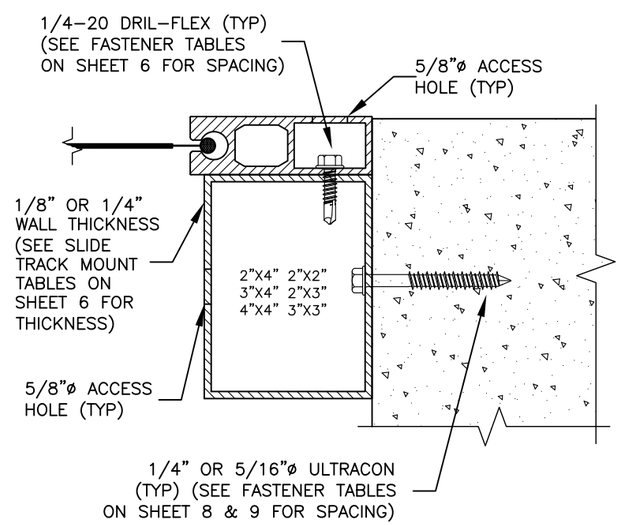

C BUILD-IN MOUNT - SECTION
SIDE RAIL INSTALLATION (OPTION 5) - N.T.S.

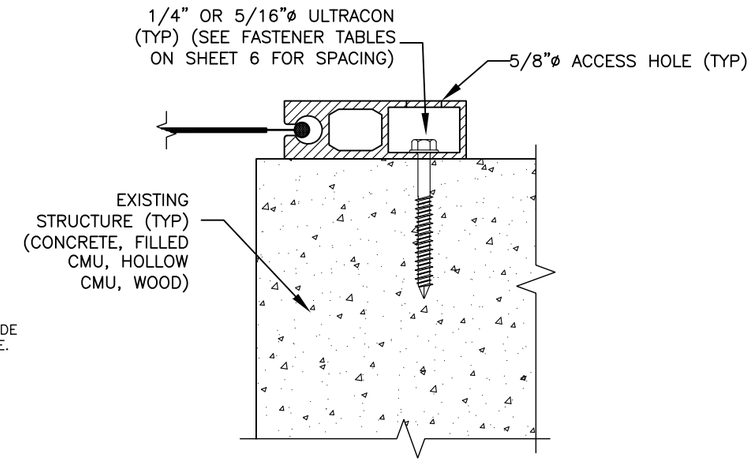

C WALL MOUNT - SECTION
TYPICAL SIDE RAIL INSTALLATION (OPTION 4) - N.T.S.

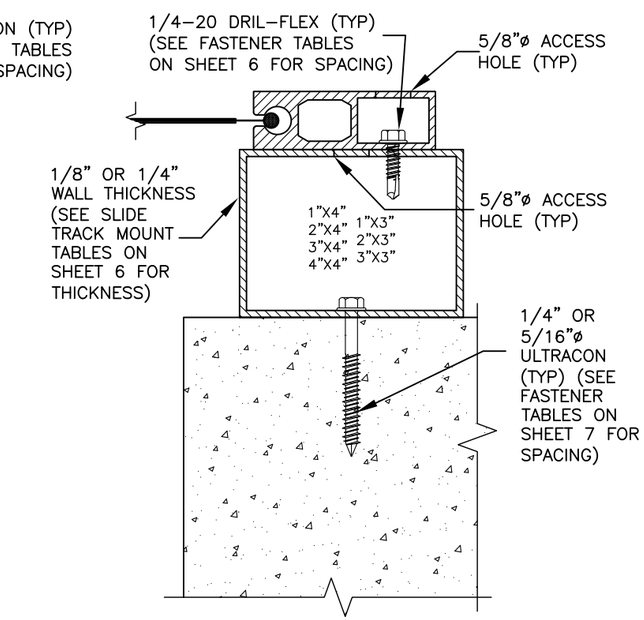

C BUILD-OUT MOUNT - SECTION
SIDE RAIL INSTALLATION (OPTION 6) - N.T.S.

REV	DESCRIPTION	DATE	BY
A	PER EMAIL FROM TDI DATED 06/24/11	08/31/11	TJH

PROJECT #310-0802

STORM SMART INDUSTRIES
6182 IDLEWILD STREET
FORT MYERS, FL 33966

TITLE: WIND ABATEMENT SYSTEM SLIDE SCREEN / SECTIONS

DRAWN BY: RJA
DATE: 12/14/10
SCALE: N.T.S.
DRAWING NO: SSI0002
REV: A
SHEET: 5 OF 17

PREPARED BY:
PTC PRODUCT DESIGN GROUP, LLC
P.O. Box 520775
Longwood, FL 32752-0775
Texas Cert. of Reg. No. F-13740
Phone: 321.690.1788
Fax: 321.690.1789
Email: info@ptc-corp.com

Robert J. Amoruso, P.E.
Texas P.E. No. 80817

STATE OF TEXAS
ROBERT JAMES AMORUSO
80817
LICENSED
PROFESSIONAL ENGINEER
8/31/11

SLIDE SCREEN INSTALLATIONS

NOTE: LOADS AND FASTENING SCHEDULES ARE FOR ATTACHING THE SIDE RAILS AND SLIDE TRACKS TO THE EXISTING STRUCTURE AND TO ALUMINUM FRAMES

SLIDE TRACK & SLIDE RAIL MOUNT

MAXIMUM DESIGN PRESSURE OF A SIDE RAIL SCREEN FOR ANY LENGTH ATTACHED WITH 5/16" ELCO ULTRACON HFH @ 10" O.C.

SCREEN SPANS UP TO	PRESSURE (PSF)			
	CONC. & FILLED CMU (3500 PSI)	CONC. & FILLED CMU (2500 PSI)	HOLLOW CMU (1800 PSI)	TIMBER (S.G. = .55)
4'-0"	100	100	100	100
4'-6"	100	100	100	100
5'-0"	100	100	94	100
5'-6"	100	100	81	100
6'-0"	100	100	71	100
6'-6"	100	100	63	99
7'-0"	100	100	56	89
7'-6"	100	100	51	80
8'-0"	100	100	46	73
8'-6"	100	100	42	67
9'-0"	100	100	39	61
9'-6"	100	98	36	57
10'-0"	100	90	34	53
10'-6"	100	84	31	49
11'-0"	100	78	29	46
11'-6"	95	73	28	43
12'-0"	89	68	26	41
12'-6"	84	64	25	39
13'-0"	79	61	24	37

SLIDE TRACK & SLIDE RAIL MOUNT

MAXIMUM DESIGN PRESSURE OF A SIDE RAIL SCREEN FOR ANY LENGTH ATTACHED WITH 5/16" ELCO ULTRACON HFH @ 6" O.C.

SCREEN SPANS UP TO	PRESSURE (PSF)			
	CONC. & FILLED CMU (3500 PSI)	CONC. & FILLED CMU (2500 PSI)	HOLLOW CMU (1800 PSI)	TIMBER (S.G. = .55)
4'-0"	100	100	100	100
4'-6"	100	100	100	100
5'-0"	100	100	100	100
5'-6"	100	100	100	100
6'-0"	100	100	100	100
6'-6"	100	100	100	100
7'-0"	100	100	100	100
7'-6"	100	100	100	100
8'-0"	100	100	100	100
8'-6"	100	100	91	100
9'-0"	100	100	83	100
9'-6"	100	100	77	100
10'-0"	100	100	71	100
10'-6"	100	100	66	100
11'-0"	100	100	61	97
11'-6"	100	100	57	91
12'-0"	100	100	54	85
12'-6"	100	100	51	80
13'-0"	100	100	48	76

SLIDE TRACK & SLIDE RAIL MOUNT

MAXIMUM DESIGN PRESSURE OF A SIDE RAIL SCREEN FOR ANY LENGTH ATTACHED WITH 5/16" ELCO ULTRACON HFH @ 4" O.C.

SCREEN SPANS UP TO	PRESSURE (PSF)			
	CONC. & FILLED CMU (3500 PSI)	CONC. & FILLED CMU (2500 PSI)	HOLLOW CMU (1800 PSI)	TIMBER (S.G. = .55)
4'-0"	100	100	100	100
4'-6"	100	100	100	100
5'-0"	100	100	100	100
5'-6"	100	100	100	100
6'-0"	100	100	100	100
6'-6"	100	100	100	100
7'-0"	100	100	100	100
7'-6"	100	100	100	100
8'-0"	100	100	100	100
8'-6"	100	100	100	100
9'-0"	100	100	100	100
9'-6"	100	100	100	100
10'-0"	100	100	100	100
10'-6"	100	100	100	100
11'-0"	100	100	100	100
11'-6"	100	100	100	100
12'-0"	100	100	100	100
12'-6"	100	100	94	100
13'-0"	100	100	88	100

SLIDE TRACK & SLIDE RAIL MOUNT

MAXIMUM DESIGN PRESSURE OF A SIDE RAIL SCREEN FOR ANY LENGTH ATTACHED WITH 1/4"-14 ELCO DRIL-FLEX HWH.

SCREEN SPANS UP TO	PRESSURE (PSF)			
	@ 6" O.C. 1/8" AL/ST	@ 6" O.C. 1/4" AL/ST	@ 4" O.C. 1/8" AL/ST	@ 4" O.C. 1/4" AL/ST
4'-0"	100	100	100	100
4'-6"	100	100	100	100
5'-0"	100	100	100	100
5'-6"	100	100	100	100
6'-0"	100	100	100	100
6'-6"	100	100	100	100
7'-0"	100	100	100	100
7'-6"	100	100	100	100
8'-0"	100	100	100	100
8'-6"	100	100	100	100
9'-0"	100	100	100	100
9'-6"	100	100	100	100
10'-0"	100	100	100	100
10'-6"	100	100	100	100
11'-0"	95	100	100	100
11'-6"	89	100	100	100
12'-0"	84	100	100	100
12'-6"	80	100	100	100
13'-0"	76	100	100	100

NOTE: USE THESE TABLES TO DETERMINE THE MINIMUN WALL THICKNESS FOR THE MEMBER TO WHICH THE SIDE RAIL IS ATTACHED

PROJECT #310-0802

REV	DESCRIPTION	DATE	BY
A	PER EMAIL FROM TDI DATED 06/24/11	08/31/11	TJH

STORM SMART INDUSTRIES
6182 IDLEWILD STREET
FORT MYERS, FL 33966

TITLE: WIND ABATEMENT SYSTEM
SLIDE SCREEN / RAIL & TRACK ANCHOR SPACING & DP'S

PREPARED BY:
PTC PRODUCT DESIGN GROUP, LLC
P.O. Box 520775
Longwood, FL 32752-0775
Texas Cert. of Reg. No. F-13740
Phone: 321.690.1788
Fax: 321.690.1789
Email: info@ptc-corp.com

DRAWN BY: RJA
DATE: 12/14/10
SCALE: N.T.S.
DRAWING NO: SSI0002
REV: A
SHEET: 6 OF 17

Robert J. Amoruso, P.E.
Texas P.E. No. 80817

STATE OF TEXAS
ROBERT JAMES AMORUSO
80817
LICENSED
PROFESSIONAL ENGINEER
8/31/11

SLIDE SCREEN INSTALLATIONS

NOTE: LOADS AND FASTENING SCHEDULES ARE FOR ATTACHING BUILD-OUTS TO THE EXISTING STRUCTURE AND TO ALUMINUM OR STEEL MEMBERS

4" BUILD-OUTS

MAXIMUM DESIGN PRESSURE OF ALL SCREEN SYSTEMS FOR ANY LENGTH ATTACHED WITH 5/16" ELCO ULTRACON HFH @ 6" O.C.

SCREEN SPANS UP TO	PRESSURE (PSF)			
	CONC. & FILLED CMU (3500 PSI)	CONC. & FILLED CMU (2500 PSI)	HOLLOW CMU (1800 PSI)	TIMBER (S.G. = .55)
4'-0"	100	100	100	100
4'-6"	100	100	100	100
5'-0"	100	100	88	100
5'-6"	100	100	76	100
6'-0"	100	100	67	100
6'-6"	100	100	59	100
7'-0"	100	100	53	95
7'-6"	100	100	48	86
8'-0"	100	100	44	79
8'-6"	100	100	41	72
9'-0"	100	98	38	67
9'-6"	100	90	35	62
10'-0"	100	84	33	58
10'-6"	100	78	31	54
11'-0"	94	72	29	51
11'-6"	88	68	27	48
12'-0"	83	64	26	45
12'-6"	78	60	24	43
13'-0"	73	57	23	40

4" BUILD-OUTS

MAXIMUM DESIGN PRESSURE OF ALL SCREEN SYSTEMS FOR ANY LENGTH ATTACHED WITH 5/16" ELCO ULTRACON HFH @ 4" O.C.

SCREEN SPANS UP TO	PRESSURE (PSF)			
	CONC. & FILLED CMU (3500 PSI)	CONC. & FILLED CMU (2500 PSI)	HOLLOW CMU (1800 PSI)	TIMBER (S.G. = .55)
4'-0"	100	100	100	100
4'-6"	100	100	100	100
5'-0"	100	100	100	100
5'-6"	100	100	100	100
6'-0"	100	100	100	100
6'-6"	100	100	100	100
7'-0"	100	100	97	100
7'-6"	100	100	88	100
8'-0"	100	100	80	100
8'-6"	100	100	73	100
9'-0"	100	100	67	100
9'-6"	100	100	62	100
10'-0"	100	100	57	100
10'-6"	100	100	53	95
11'-0"	100	100	50	89
11'-6"	100	100	47	84
12'-0"	100	100	44	79
12'-6"	100	100	42	74
13'-0"	100	100	40	70

4" BUILD-OUTS

MAXIMUM DESIGN PRESSURE OF ALL SCREEN SYSTEMS FOR ANY LENGTH ATTACHED WITH 1/4"-14 ELCO DRIL-FLEX HWH.

SCREEN SPANS UP TO	PRESSURE (PSF)			
	@ 6" O.C. 1/8" AL/ST	@ 6" O.C. 1/4" AL/ST	@ 4" O.C. 1/8" AL/ST	@ 4" O.C. 1/4" AL/ST
4'-0"	100	100	100	100
4'-6"	100	100	100	100
5'-0"	100	100	100	100
5'-6"	100	100	100	100
6'-0"	96	100	100	100
6'-6"	85	100	100	100
7'-0"	77	100	100	100
7'-6"	69	100	100	100
8'-0"	63	100	100	100
8'-6"	58	100	100	100
9'-0"	53	100	96	100
9'-6"	50	100	89	100
10'-0"	46	100	82	100
10'-6"	43	100	77	100
11'-0"	41	100	72	100
11'-6"	38	100	67	100
12'-0"	36	100	63	100
12'-6"	34	100	60	100
13'-0"	32	97	56	100

NOTE: USE THESE TABLES TO DETERMINE THE MINIMUN WALL THICKNESS FOR THE MEMBER TO WHICH THE SIDE RAIL IS ATTACHED

3" BUILD-OUTS

MAXIMUM DESIGN PRESSURE OF ALL SCREEN SYSTEMS FOR ANY LENGTH ATTACHED WITH 5/16" ELCO ULTRACON HFH @ 6" O.C.

SCREEN SPANS UP TO	PRESSURE (PSF)			
	CONC. & FILLED CMU (3500 PSI)	CONC. & FILLED CMU (2500 PSI)	HOLLOW CMU (1800 PSI)	TIMBER (S.G. = .55)
4'-0"	100	100	100	100
4'-6"	100	100	100	100
5'-0"	100	100	100	100
5'-6"	100	100	97	100
6'-0"	100	100	83	100
6'-6"	100	100	73	100
7'-0"	100	100	64	100
7'-6"	100	100	58	99
8'-0"	100	100	52	89
8'-6"	100	100	48	81
9'-0"	100	100	44	74
9'-6"	100	100	40	67
10'-0"	100	100	37	63
10'-6"	100	100	35	58
11'-0"	100	92	33	54
11'-6"	100	85	31	50
12'-0"	100	79	29	47
12'-6"	100	74	27	44
13'-0"	93	69	26	41

3" BUILD-OUTS

MAXIMUM DESIGN PRESSURE OF ALL SCREEN SYSTEMS FOR ANY LENGTH ATTACHED WITH 5/16" ELCO ULTRACON HFH @ 4" O.C.

SCREEN SPANS UP TO	PRESSURE (PSF)			
	CONC. & FILLED CMU (3500 PSI)	CONC. & FILLED CMU (2500 PSI)	HOLLOW CMU (1800 PSI)	TIMBER (S.G. = .55)
4'-0"	100	100	100	100
4'-6"	100	100	100	100
5'-0"	100	100	100	100
5'-6"	100	100	100	100
6'-0"	100	100	100	100
6'-6"	100	100	100	100
7'-0"	100	100	100	100
7'-6"	100	100	100	100
8'-0"	100	100	100	100
8'-6"	100	100	92	100
9'-0"	100	100	83	100
9'-6"	100	100	76	100
10'-0"	100	100	70	100
10'-6"	100	100	64	100
11'-0"	100	100	60	100
11'-6"	100	100	56	93
12'-0"	100	100	52	86
12'-6"	100	100	49	81
13'-0"	100	100	46	76

3" BUILD-OUTS

MAXIMUM DESIGN PRESSURE OF ALL SCREEN SYSTEMS FOR ANY LENGTH ATTACHED WITH 1/4"-14 ELCO DRIL-FLEX HWH.

SCREEN SPANS UP TO	PRESSURE (PSF)			
	@ 6" O.C. 1/8" AL/ST	@ 6" O.C. 1/4" AL/ST	@ 4" O.C. 1/8" AL/ST	@ 4" O.C. 1/4" AL/ST
4'-0"	100	100	100	100
4'-6"	100	100	100	100
5'-0"	100	100	100	100
5'-6"	100	100	100	100
6'-0"	100	100	100	100
6'-6"	100	100	100	100
7'-0"	95	100	100	100
7'-6"	84	100	100	100
8'-0"	76	100	100	100
8'-6"	69	100	100	100
9'-0"	63	100	100	100
9'-6"	57	100	100	100
10'-0"	53	100	100	100
10'-6"	49	100	95	100
11'-0"	46	100	88	100
11'-6"	43	100	81	100
12'-0"	40	100	76	100
12'-6"	38	100	71	100
13'-0"	36	100	66	100

NOTE: USE THESE TABLES TO DETERMINE THE MINIMUN WALL THICKNESS FOR THE MEMBER TO WHICH THE SIDE RAIL IS ATTACHED

PROJECT #310-0802

REV	DESCRIPTION	DATE	BY
A	PER EMAIL FROM TDI DATED 06/24/11	08/31/11	TJH

STORM SMART INDUSTRIES
6182 IDLEWILD STREET
FORT MYERS, FL 33966

WIND ABATEMENT SYSTEM
SLIDE SCREEN / BUILD-OUTS ANCHOR SPACING & DP'S

TITLE:

DRAWN BY: RJA	DATE: 12/14/10
SCALE: N.T.S.	DRAWING NO: SSI0002
REV: A	SHEET: 7 OF 17

PREPARED BY:

PTC PRODUCT DESIGN GROUP, LLC
P.O. Box 520775
Longwood, FL 32752-0775
Texas Cert. of Reg. No. F-13740
Phone: 321.690.1788
Fax: 321.690.1789
Email: info@ptc-corp.com

Robert J. Amoruso, P.E.
Texas P.E. No. 80817

STATE OF TEXAS
ROBERT JAMES AMORUSO
80817
LICENSED
PROFESSIONAL ENGINEER

8/31/11

SLIDE SCREEN INSTALLATIONS

NOTE: LOADS AND FASTENING SCHEDULES ARE FOR ATTACHING BUILD-INS TO THE EXISTING STRUCTURE AND TO ALUMINUM OR STEEL MEMBERS

4" BUILD-INS

MAXIMUM DESIGN PRESSURE OF ALL SCREEN SYSTEMS FOR ANY LENGTH ATTACHED WITH 5/16" ELCO ULTRACON HFH @ 6" O.C.

SCREEN SPANS UP TO	PRESSURE (PSF)			
	CONC. & FILLED CMU (3500 PSI)	CONC. & FILLED CMU (2500 PSI)	HOLLOW CMU (1800 PSI)	TIMBER (S.G. = .55)
4'-0"	100	100	100	100
4'-6"	100	100	100	100
5'-0"	100	100	89	100
5'-6"	100	100	75	100
6'-0"	100	100	65	100
6'-6"	100	100	56	100
7'-0"	100	100	50	98
7'-6"	100	100	45	87
8'-0"	100	100	41	78
8'-6"	100	100	37	71
9'-0"	100	100	34	65
9'-6"	100	92	32	60
10'-0"	100	84	29	55
10'-6"	100	77	27	51
11'-0"	97	71	26	48
11'-6"	90	66	24	45
12'-0"	83	61	23	42
12'-6"	77	57	22	40
13'-0"	72	53	21	37

4" BUILD-INS

MAXIMUM DESIGN PRESSURE OF ALL SCREEN SYSTEMS FOR ANY LENGTH ATTACHED WITH 5/16" ELCO ULTRACON HFH @ 4" O.C.

SCREEN SPANS UP TO	PRESSURE (PSF)			
	CONC. & FILLED CMU (3500 PSI)	CONC. & FILLED CMU (2500 PSI)	HOLLOW CMU (1800 PSI)	TIMBER (S.G. = .55)
4'-0"	100	100	100	100
4'-6"	100	100	100	100
5'-0"	100	100	100	100
5'-6"	100	100	100	100
6'-0"	100	100	100	100
6'-6"	100	100	100	100
7'-0"	100	100	100	100
7'-6"	100	100	89	100
8'-0"	100	100	79	100
8'-6"	100	100	71	100
9'-0"	100	100	65	100
9'-6"	100	100	59	100
10'-0"	100	100	54	100
10'-6"	100	100	50	98
11'-0"	100	100	46	90
11'-6"	100	100	43	84
12'-0"	100	100	41	78
12'-6"	100	100	38	73
13'-0"	100	100	36	69

4" BUILD-INS

MAXIMUM DESIGN PRESSURE OF ALL SCREEN SYSTEMS FOR ANY LENGTH ATTACHED WITH 1/4"-14 ELCO DRIL-FLEX HWH.

SCREEN SPANS UP TO	PRESSURE (PSF)			
	@ 6" O.C. 1/8" AL/ST	@ 6" O.C. 1/4" AL/ST	@ 4" O.C. 1/8" AL/ST	@ 4" O.C. 1/4" AL/ST
4'-0"	100	100	100	100
4'-6"	100	100	100	100
5'-0"	100	100	100	100
5'-6"	100	100	100	100
6'-0"	99	100	100	100
6'-6"	86	100	100	100
7'-0"	76	100	100	100
7'-6"	67	100	100	100
8'-0"	61	100	100	100
8'-6"	55	100	100	100
9'-0"	50	100	99	100
9'-6"	46	100	90	100
10'-0"	43	100	82	100
10'-6"	40	100	76	100
11'-0"	37	100	70	100
11'-6"	35	100	65	100
12'-0"	33	100	61	100
12'-6"	31	100	57	100
13'-0"	29	100	53	100

NOTE: USE THESE TABLES TO DETERMINE THE MINIMUN WALL THICKNESS FOR THE MEMBER TO WHICH THE SIDE RAIL IS ATTACHED

3" BUILD-INS

MAXIMUM DESIGN PRESSURE OF ALL SCREEN SYSTEMS FOR ANY LENGTH ATTACHED WITH 5/16" ELCO ULTRACON HFH @ 6" O.C.

SCREEN SPANS UP TO	PRESSURE (PSF)			
	CONC. & FILLED CMU (3500 PSI)	CONC. & FILLED CMU (2500 PSI)	HOLLOW CMU (1800 PSI)	TIMBER (S.G. = .55)
4'-0"	100	100	100	100
4'-6"	100	100	87	100
5'-0"	100	100	72	100
5'-6"	100	100	61	100
6'-0"	100	100	53	100
6'-6"	100	100	47	93
7'-0"	100	100	42	82
7'-6"	100	100	38	73
8'-0"	100	100	34	66
8'-6"	100	91	31	60
9'-0"	100	82	29	55
9'-6"	100	74	27	51
10'-0"	93	68	25	47
10'-6"	85	63	23	44
11'-0"	78	58	22	41
11'-6"	72	54	21	38
12'-0"	67	50	20	36
12'-6"	63	47	19	34
13'-0"	59	44	18	32

3" BUILD-INS

MAXIMUM DESIGN PRESSURE OF ALL SCREEN SYSTEMS FOR ANY LENGTH ATTACHED WITH 5/16" ELCO ULTRACON HFH @ 4" O.C.

SCREEN SPANS UP TO	PRESSURE (PSF)			
	CONC. & FILLED CMU (3500 PSI)	CONC. & FILLED CMU (2500 PSI)	HOLLOW CMU (1800 PSI)	TIMBER (S.G. = .55)
4'-0"	100	100	100	100
4'-6"	100	100	100	100
5'-0"	100	100	100	100
5'-6"	100	100	100	100
6'-0"	100	100	100	100
6'-6"	100	100	93	100
7'-0"	100	100	81	100
7'-6"	100	100	72	100
8'-0"	100	100	64	100
8'-6"	100	100	58	100
9'-0"	100	100	53	100
9'-6"	100	100	49	97
10'-0"	100	100	45	89
10'-6"	100	100	42	82
11'-0"	100	100	39	76
11'-6"	100	100	36	71
12'-0"	100	100	34	66
12'-6"	100	94	32	62
13'-0"	100	88	30	58

3" BUILD-INS

MAXIMUM DESIGN PRESSURE OF ALL SCREEN SYSTEMS FOR ANY LENGTH ATTACHED WITH 1/4"-14 ELCO DRIL-FLEX HWH.

SCREEN SPANS UP TO	PRESSURE (PSF)			
	@ 6" O.C. 1/8" AL/ST	@ 6" O.C. 1/4" AL/ST	@ 4" O.C. 1/8" AL/ST	@ 4" O.C. 1/4" AL/ST
4'-0"	100	100	100	100
4'-6"	100	100	100	100
5'-0"	100	100	100	100
5'-6"	95	100	100	100
6'-0"	81	100	100	100
6'-6"	71	100	100	100
7'-0"	63	100	100	100
7'-6"	56	100	100	100
8'-0"	51	100	100	100
8'-6"	46	100	90	100
9'-0"	42	100	81	100
9'-6"	39	100	74	100
10'-0"	36	100	68	100
10'-6"	34	100	63	100
11'-0"	32	100	58	100
11'-6"	30	100	54	100
12'-0"	28	96	51	100
12'-6"	27	90	48	100
13'-0"	25	85	45	100

NOTE: USE THESE TABLES TO DETERMINE THE MINIMUN WALL THICKNESS FOR THE MEMBER TO WHICH THE SIDE RAIL IS ATTACHED

PROJECT #310-0802

REV	DESCRIPTION	DATE	BY
A	PER EMAIL FROM TDI DATED 06/24/11	08/31/11	TJH

STORM SMART INDUSTRIES
6182 IDLEWILD STREET
FORT MYERS, FL 33966

TITLE: WIND ABATEMENT SYSTEM
SLIDE SCREEN / BUILD-INS ANCHOR SPACING & DP'S

DRAWN BY: RJA
DATE: 12/14/10
SCALE: N.T.S.
DRAWING NO: SSI0002
REV: A
SHEET: 8 OF 17

PREPARED BY:
PTC PRODUCT DESIGN GROUP, LLC
P.O. Box 520775
Longwood, FL 32752-0775
Texas Cert. of Reg. No. F-13740
Phone: 321.690.1788
Fax: 321.690.1789
Email: info@ptc-corp.com

Robert J. Amoruso, P.E.
Texas P.E. No. 80817

STATE OF TEXAS
ROBERT JAMES AMORUSO
80817
LICENSED
PROFESSIONAL ENGINEER
8/31/11

SLIDE SCREEN INSTALLATIONS

NOTE: LOADS AND FASTENING SCHEDULES ARE FOR ATTACHING 2" BUILD-INS AND 3/8" ANGLES TO THE EXISTING STRUCTURE AND TO ALUMINUM OR STEEL MEMBERS

2" BUILD-INS W/ 1/4" WALLS & 3/8" ANGLES

MAXIMUM DESIGN PRESSURE OF ALL SCREEN SYSTEMS FOR ANY LENGTH ATTACHED WITH 5/16" ELCO ULTRACON HFH @ 6" O.C.

SCREEN SPANS UP TO	PRESSURE (PSF)			
	CONC. & FILLED CMU (3500 PSI)	CONC. & FILLED CMU (2500 PSI)	HOLLOW CMU (1800 PSI)	TIMBER (S.G. = .55)
4'-0"	100	100	75	100
4'-6"	100	100	61	100
5'-0"	100	100	51	100
5'-6"	100	100	44	91
6'-0"	100	100	39	79
6'-6"	100	100	34	69
7'-0"	100	89	31	61
7'-6"	100	79	28	55
8'-0"	96	70	26	50
8'-6"	86	63	24	46
9'-0"	78	58	22	42
9'-6"	71	53	20	39
10'-0"	65	49	19	36
10'-6"	60	45	18	34
11'-0"	55	42	17	32
11'-6"	51	39	16	30
12'-0"	48	37	15	28
12'-6"	45	35	14	27
13'-0"	42	33	14	25

2" BUILD-INS W/ 1/4" WALLS & 3/8" ANGLES

MAXIMUM DESIGN PRESSURE OF ALL SCREEN SYSTEMS FOR ANY LENGTH ATTACHED WITH 5/16" ELCO ULTRACON HFH @ 4" O.C.

SCREEN SPANS UP TO	PRESSURE (PSF)			
	CONC. & FILLED CMU (3500 PSI)	CONC. & FILLED CMU (2500 PSI)	HOLLOW CMU (1800 PSI)	TIMBER (S.G. = .55)
4'-0"	100	100	100	100
4'-6"	100	100	100	100
5'-0"	100	100	100	100
5'-6"	100	100	87	100
6'-0"	100	100	75	100
6'-6"	100	100	65	100
7'-0"	100	100	57	100
7'-6"	100	100	51	100
8'-0"	100	100	46	96
8'-6"	100	100	42	86
9'-0"	100	100	39	79
9'-6"	100	100	36	72
10'-0"	100	97	33	66
10'-6"	100	89	31	61
11'-0"	100	82	29	57
11'-6"	100	76	27	53
12'-0"	96	70	26	50
12'-6"	89	66	24	47
13'-0"	83	61	23	44

2" BUILD-INS W/ 1/4" WALLS & 3/8" ANGLES

MAXIMUM DESIGN PRESSURE OF ALL SCREEN SYSTEMS FOR ANY LENGTH ATTACHED WITH 1/4"-14 ELCO DRIL-FLEX HWH.

SCREEN SPANS UP TO	PRESSURE (PSF)			
	@ 6" O.C. 1/8" AL/ST	@ 6" O.C. 1/4" AL/ST	@ 4" O.C. 1/8" AL/ST	@ 4" O.C. 1/4" AL/ST
4'-0"	100	100	100	100
4'-6"	96	100	100	100
5'-0"	80	100	100	100
5'-6"	68	100	100	100
6'-0"	59	100	100	100
6'-6"	52	100	100	100
7'-0"	46	100	90	100
7'-6"	42	100	80	100
8'-0"	38	100	72	100
8'-6"	35	100	65	100
9'-0"	32	100	59	100
9'-6"	30	100	54	100
10'-0"	28	97	50	100
10'-6"	26	89	46	100
11'-0"	24	83	43	100
11'-6"	23	77	41	100
12'-0"	22	72	38	100
12'-6"	21	67	36	100
13'-0"	20	63	34	100

NOTE: USE THESE TABLES TO DETERMINE THE MINIMUN WALL THICKNESS FOR THE MEMBER TO WHICH THE SIDE RAIL IS ATTACHED

PROJECT #310-0802

REV	DESCRIPTION	DATE	BY
A	PER EMAIL FROM TDI DATED 06/24/11	08/31/11	TJH

STORM SMART INDUSTRIES
6182 IDLEWILD STREET
FORT MYERS, FL 33966

TITLE: WIND ABATEMENT SYSTEM
SLIDE SCREEN / BUILD-INS & ANGLES ANCHOR SPACING & DP'S

DRAWN BY: RJA
DATE: 12/14/10
SCALE: N.T.S.
DRAWING NO: SSI0002
REV: A
SHEET: 9 OF 17

PREPARED BY:

PTC PRODUCT DESIGN GROUP, LLC
P.O. Box 520175
Longwood, FL 32752-0175
Texas Cert. of Reg. No. F-13740
Phone: 321.690.1788
Fax: 321.690.1789
Email: info@ptc-corp.com

Robert J. Amoruso, P.E.
Texas P.E. No. 80817

STATE OF TEXAS
ROBERT JAMES AMORUSO
80817
LICENSED
PROFESSIONAL ENGINEER
8/31/11

GROMMET SCREEN INSTALLATIONS

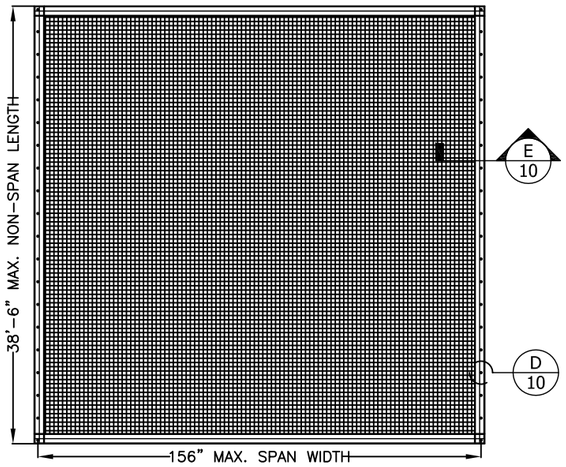

GROMMET SCREEN SINGLE PANEL - ELEVATION

TYPICAL 2 SIDED ATTACHMENT - VERTICAL OR HORIZONTAL INSTALLATION - N.T.S.

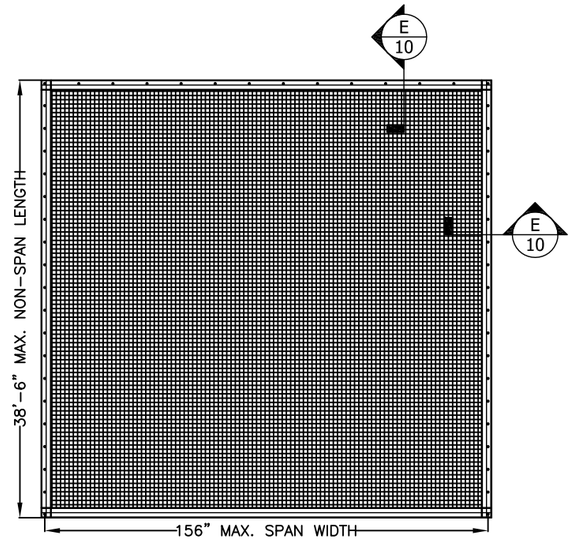

GROMMET SCREEN SINGLE PANEL - ELEVATION

3 OR 4 SIDED ATTACHMENT- VERTICAL OR HORIZONTAL INSTALLATION - SCALE N.T.S.

NOTE: FOR 4 SIDED ATTACHMENT THE SPAN IS IN THE SHORT DIMENSION BEWTEEN FASTENERS.

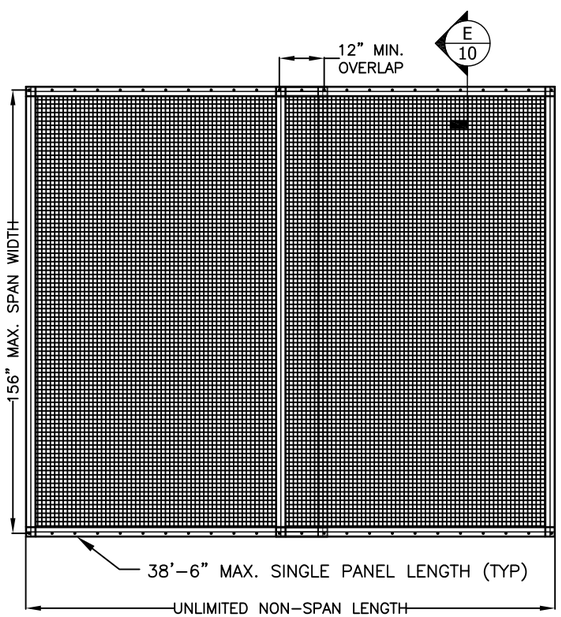

GROMMET SCREEN MULTIPLE PANEL - ELEVATION

LAPPED SCREEN - VERTICAL OR HORIZONTAL INSTALLATION - N.T.S.

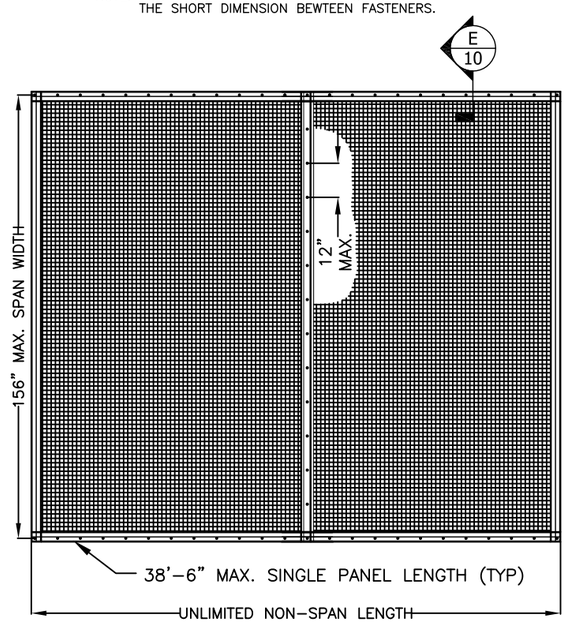

GROMMET SCREEN MULTIPLE PANEL - ELEVATION

VERTICAL OR HORIZONTAL INSTALLATION - N.T.S.

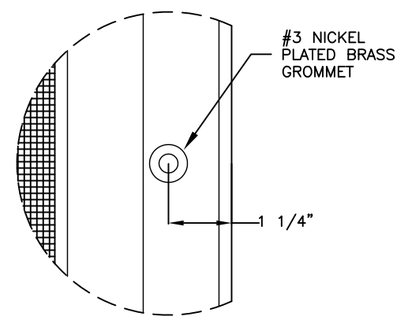

D GROMMET - DETAIL

SCALE: 3/8":1"

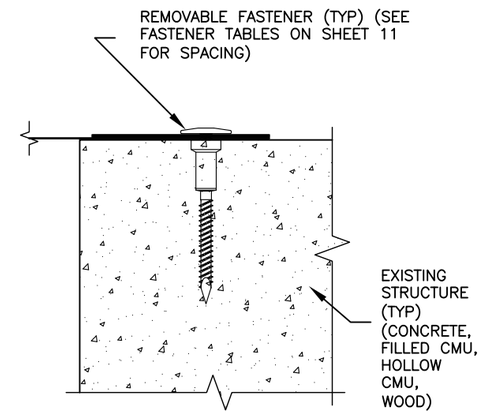

E WALL MOUNT - SECTION

TYPICAL INSTALLATION (OPTION 1) - N.T.S.

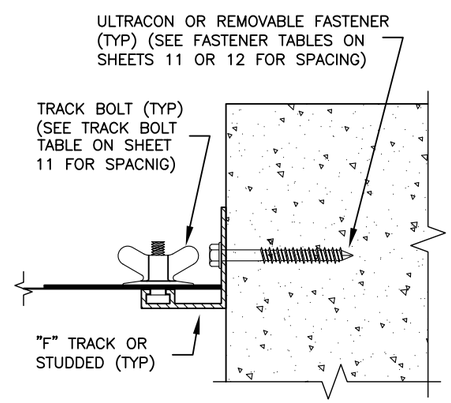

E BUILD-IN MOUNT - SECTION

ANGLED "F" OR STUDDED INSTALLATION (OPTION 2) - N.T.S.

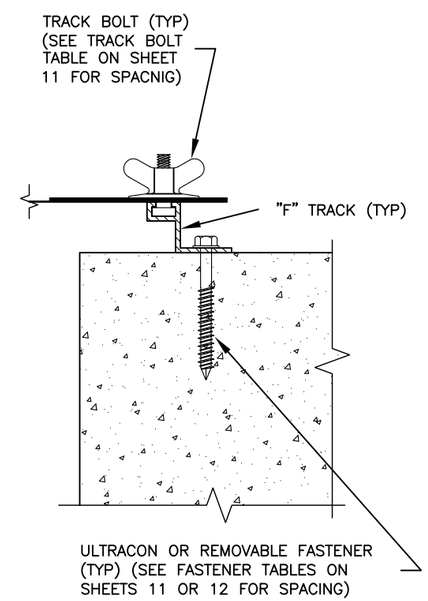

E "F" TRACK MOUNT - SECTION

STANDARD OR BUILD-OUT INSTALLATION (OPTION 3) - N.T.S.

REV	DESCRIPTION	DATE	BY
A	PER EMAIL FROM TDI DATED 06/24/11	08/31/11	TJH

PROJECT #310-0802

STORM SMART INDUSTRIES
6182 IDLEWILD STREET
FORT MYERS, FL 33966

TITLE: WIND ABATEMENT SYSTEM
GROMMET SCREEN / ELEVATIONS & SECTIONS

DRAWN BY: RJA
DATE: 12/14/10
SCALE: N.T.S.
DRAWING NO: SSI0002
REV: A
SHEET: 10 OF 17

PREPARED BY:

PTC PRODUCT DESIGN GROUP, LLC
P.O. Box 520775
Longwood, FL 32752-0775
Texas Cert. of Reg. No. F-13740
Phone: 321.690.1788
Fax: 321.690.1789
Email: info@ptc-corp.com

Robert J. Amoruso, P.E.
Texas P.E. No. 80817

STATE OF TEXAS
ROBERT JAMES AMORUSO
80817
LICENSED
PROFESSIONAL ENGINEER

8/31/11

GROMMET SCREEN INSTALLATIONS

NOTE: LOADS AND FASTENING SCHEDULES ARE FOR ATTACHING GROMMETS TO THE EXISTING STRUCTURE AND TO "F" TRACKS OR STUDDED ANGLES

MAXIMUM DESIGN PRESSURE OF A GROMMET SCREEN FOR ANY LENGTH ATTACHED WITH 1/4"-20 W/ ELCO PANELMATE INSERT OR 3/8"-16 W/ ITW MULTI-SET II, POWERS DROPIN, & CALK-IN (PSF)

SCREEN SPANS UP TO	CONC. & FILLED CMU (3500 PSI)					CONC. & FILLED CMU (2500 PSI)					HOLLOW CMU (1800 PSI)					TIMBER (S.G. = .55)				
	SPACING (INCHES)					SPACING (INCHES)					SPACING (INCHES)					SPACING (INCHES)				
	8	7	6	5	4	8	7	6	5	4	8	7	6	5	4	8	7	6	5	4
4'-0"	100	100	100	100	100	100	100	100	100	100	100	100	100	100	100	100	100	100	100	100
4'-6"	100	100	100	100	100	100	100	100	100	100	100	100	100	100	100	100	100	100	100	100
5'-0"	100	100	100	100	100	100	100	100	100	100	100	100	100	100	100	100	100	100	100	100
5'-6"	100	100	100	100	100	100	100	100	100	100	100	100	100	100	100	100	100	100	100	100
6'-0"	100	100	100	100	100	100	100	100	100	100	100	100	100	100	100	100	100	100	100	100
6'-6"	100	100	100	100	100	100	100	100	100	100	100	100	100	100	100	100	100	100	100	100
7'-0"	100	100	100	100	100	100	100	100	100	100	100	100	100	100	100	97	100	100	100	100
7'-6"	100	100	100	100	100	100	100	100	100	100	100	100	100	100	100	88	100	100	100	100
8'-0"	100	100	100	100	100	100	100	100	100	100	100	100	100	100	100	80	97	100	100	100
8'-6"	100	100	100	100	100	100	100	100	100	100	100	100	100	100	100	73	89	100	100	100
9'-0"	100	100	100	100	100	100	100	100	100	100	100	100	100	100	100	67	82	100	100	100
9'-6"	100	100	100	100	100	100	100	100	100	100	100	100	100	100	100	62	76	94	100	100
10'-0"	100	100	100	100	100	100	100	100	100	100	100	100	100	100	100	58	70	88	100	100
10'-6"	100	100	100	100	100	100	100	100	100	100	96	100	100	100	100	54	65	82	100	100
11'-0"	100	100	100	100	100	100	100	100	100	100	90	100	100	100	100	51	61	76	99	100
11'-6"	100	100	100	100	100	100	100	100	100	100	84	100	100	100	100	48	58	72	93	100
12'-0"	98	100	100	100	100	98	100	100	100	100	79	96	100	100	100	45	54	67	88	100
12'-6"	92	100	100	100	100	92	100	100	100	100	74	90	100	100	100	43	51	64	83	100
13'-0"	86	100	100	100	100	86	100	100	100	100	70	85	100	100	100	40	49	60	78	100

MAXIMUM DESIGN PRESSURE OF A GROMMET SCREEN FOR ANY LENGTH ATTACHED WITH 1/4"-20 W/ POWERS CALK-IN (PSF)

SCREEN SPANS UP TO	CONC. & FILLED CMU (3500 PSI)					CONC. & FILLED CMU (2500 PSI)				
	SPACING (INCHES)					SPACING (INCHES)				
	8	7	6	5	4	8	7	6	5	4
4'-0"	100	100	100	100	100	100	100	100	100	100
4'-6"	100	100	100	100	100	100	100	100	100	100
5'-0"	100	100	100	100	100	100	100	100	100	100
5'-6"	100	100	100	100	100	100	100	100	100	100
6'-0"	100	100	100	100	100	100	100	100	100	100
6'-6"	100	100	100	100	100	93	100	100	100	100
7'-0"	100	100	100	100	100	82	100	100	100	100
7'-6"	98	100	100	100	100	73	91	100	100	100
8'-0"	88	100	100	100	100	66	82	100	100	100
8'-6"	79	99	100	100	100	60	74	96	100	100
9'-0"	72	90	100	100	100	54	67	87	100	100
9'-6"	66	82	100	100	100	50	62	80	100	100
10'-0"	61	76	98	100	100	46	57	73	99	100
10'-6"	56	70	90	100	100	43	53	67	91	100
11'-0"	52	65	83	100	100	40	49	63	85	100
11'-6"	49	60	77	100	100	37	46	58	78	100
12'-0"	46	56	72	98	100	35	43	54	73	100
12'-6"	43	53	67	91	100	33	40	51	68	99

MAXIMUM FASTENER SPACING OF A GROMMET SCREEN FOR ANY LENGTH ATTACHED WITH 1/4" ELCO PANELMATE PRO, PLUS, FEMALE, TVAS OR 1/4" ITW SAMMYS & STORM GUARD (INCHES)

SCREEN SPANS UP TO	CONC. & FILLED CMU (3500 PSI)					CONC. & FILLED CMU (2500 PSI)					HOLLOW CMU (1800 PSI)					TIMBER (S.G. = .55)				
	SPACING (INCHES)					SPACING (INCHES)					SPACING (INCHES)					SPACING (INCHES)				
	8	7	6	5	4	8	7	6	5	4	8	7	6	5	4	8	7	6	5	4
4'-0"	100	100	100	100	100	100	100	100	100	100	100	100	100	100	100	100	100	100	100	100
4'-6"	100	100	100	100	100	100	100	100	100	100	100	100	100	100	100	100	100	100	100	100
5'-0"	100	100	100	100	100	100	100	100	100	100	100	100	100	100	100	100	100	100	100	100
5'-6"	100	100	100	100	100	100	100	100	100	100	95	100	100	100	100	100	100	100	100	100
6'-0"	100	100	100	100	100	100	100	100	100	100	82	100	100	100	100	100	100	100	100	100
6'-6"	100	100	100	100	100	100	100	100	100	100	72	100	100	100	100	100	90	100	100	100
7'-0"	100	100	100	100	100	100	100	100	100	100	63	100	100	100	100	100	79	100	100	100
7'-6"	100	100	100	100	100	100	100	100	100	100	57	97	100	100	100	100	70	91	100	100
8'-0"	100	100	100	100	100	100	100	100	100	100	51	88	100	100	100	100	63	82	100	100
8'-6"	100	100	100	100	100	89	100	100	100	100	46	81	100	100	100	100	57	74	100	100
9'-0"	100	100	100	100	100	80	100	100	100	100	43	75	92	100	100	100	52	67	91	100
9'-6"	95	100	100	100	100	73	93	100	100	100	39	70	86	100	100	100	48	61	83	100
10'-0"	86	100	100	100	100	66	84	100	100	100	36	65	79	100	100	97	44	57	76	100
10'-6"	79	100	100	100	100	61	77	100	100	100	34	61	75	95	100	90	41	52	70	100
11'-0"	72	93	100	100	100	56	71	94	100	100	32	57	70	89	100	85	39	49	65	95
11'-6"	67	85	100	100	100	52	65	86	100	100	30	54	66	84	100	80	36	45	61	88
12'-0"	62	79	100	100	100	49	61	80	100	100	28	50	62	79	100	75	34	43	57	82
12'-6"	58	73	97	100	100	46	57	74	100	100	27	48	59	75	100	71	32	40	53	76
13'-0"	54	68	90	100	100	43	53	69	97	100	25	45	55	71	95	67	30	38	50	72

MAXIMUM DESIGN PRESSURE OF A GROMMET SCREEN FOR ANY LENGTH ATTACHED WITH 1/4"-20 ALL POINTS WOOD BUSHING (PSF)

SCREEN SPANS UP TO	TIMBER (S.G. = .55)				
	SPACING (INCHES)				
	8	7	6	5	4
4'-0"	100	100	100	100	100
4'-6"	100	100	100	100	100
5'-0"	85	100	100	100	100
5'-6"	73	90	100	100	100
6'-0"	64	79	100	100	100
6'-6"	57	69	88	100	100
7'-0"	51	62	79	100	100
7'-6"	46	56	71	94	100
8'-0"	42	51	64	85	100
8'-6"	39	47	59	77	100
9'-0"	36	43	54	71	100
9'-6"	33	40	50	65	92
10'-0"	31	37	46	60	85
10'-6"	29	35	43	56	79
11'-0"	27	33	40	52	73
11'-6"	26	31	38	49	68
12'-0"	24	29	36	46	64
12'-6"	23	28	34	44	60
13'-0"	22	26	32	41	57

MAXIMUM DESIGN PRESSURE OF A GROMMET SCREEN FOR ANY LENGTH ATTACHED WITH 1/4"-20 ALL POINTS TRACK BOLT OR STUD (PSF)

SCREEN SPANS UP TO	ALUMINUM TRACK (6063-T6)				
	SPACING (INCHES)				
	8	7	6	5	4
4'-0"	100	100	100	100	100
4'-6"	100	100	100	100	100
5'-0"	100	100	100	100	100
5'-6"	92	100	100	100	100
6'-0"	80	100	100	100	100
6'-6"	70	87	100	100	100
7'-0"	62	77	100	100	100
7'-6"	56	69	89	100	100
8'-0"	51	62	80	100	100
8'-6"	46	57	72	98	100
9'-0"	42	52	66	89	100
9'-6"	39	48	60	81	100
10'-0"	36	44	56	75	100
10'-6"	34	41	52	69	100
11'-0"	32	38	48	64	92
11'-6"	30	36	45	60	86
12'-0"	28	34	42	56	80
12'-6"	27	32	40	52	75
13'-0"	25	30	38	49	70

REV	DESCRIPTION	DATE	BY
A	PER EMAIL FROM TDI DATED 06/24/11	08/31/11	TJH

PROJECT #310-0802

STORM SMART INDUSTRIES
6182 IDLEWILD STREET
FORT MYERS, FL 33966

TITLE: WIND ABATEMENT SYSTEM GROMMET SCREEN / ANCHOR SPACING & DP'S

DRAWN BY: RJA
DATE: 12/14/10
SCALE: N.T.S.
DRAWING NO: SSI0002
REV: A
SHEET: 11 OF 17

PREPARED BY:
PTC PRODUCT DESIGN GROUP, LLC
P.O. Box 520775
Longwood, FL 32752-0775
Texas Cert. of Reg. No. F-13740
Phone: 321.690.1788
Fax: 321.690.1789
Email: info@ptc-corp.com

Robert J. Amoruso, P.E.
Texas P.E. No. 80817

STATE OF TEXAS
ROBERT JAMES AMORUSO
80817
LICENSED
PROFESSIONAL ENGINEER
8/31/11

GROMMET SCREEN INSTALLATIONS

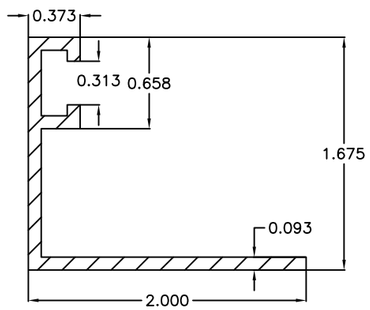

ANGLED "F" TRACK

6063-T6 ALUMINUM - SCALE: 1:1

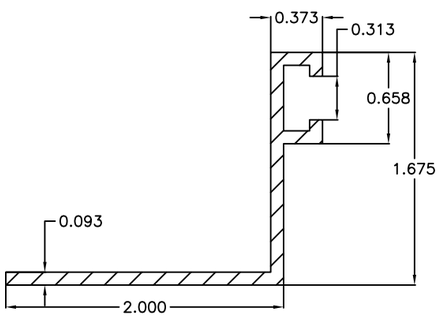

REVERSE ANGLED "F" TRACK

6063-T6 ALUMINUM - SCALE: 1:1

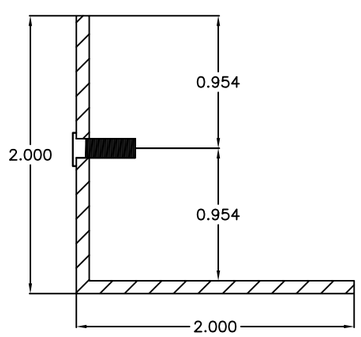

STUDDED ANGLED TRACK

6063-T6 ALUMINUM - SCALE: 1:1

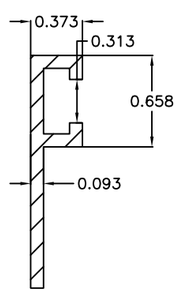

STANDARD "F" TRACK

6063-T6 ALUMINUM - SCALE: 1:1

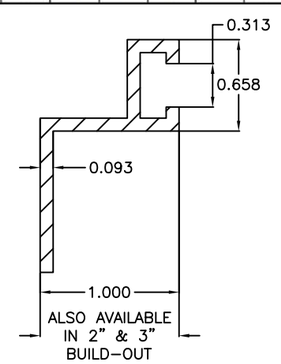

BUILD-OUT "F" TRACK

6063-T6 ALUMINUM - SCALE: 1:1

MAXIMUM DESIGN PRESSURE OF A GROMMET SCREEN FOR ANY LENGTH ATTACHED WITH 1/4" HFH ELCO ULTRACON (PSF)

SCREEN SPANS UP TO	CONC. & FILLED CMU (3000 PSI)					CONC. & FILLED CMU (2400 PSI)					HOLLOW CMU (1800 PSI)					TIMBER (S.G. = .55)				
	SPACING (INCHES)					SPACING (INCHES)					SPACING (INCHES)					SPACING (INCHES)				
	8	7	6	5	4	8	7	6	5	4	8	7	6	5	4	8	7	6	5	4
4'-0"	100	100	100	100	100	100	100	100	100	100	92	100	100	100	100	82	100	100	100	100
4'-6"	100	100	100	100	100	100	100	100	100	100	75	95	100	100	100	69	84	100	100	100
5'-0"	100	100	100	100	100	100	100	100	100	100	63	79	100	100	100	59	72	90	100	100
5'-6"	100	100	100	100	100	100	100	100	100	100	54	67	88	100	100	52	62	78	100	100
6'-0"	100	100	100	100	100	100	100	100	100	100	47	58	75	100	100	46	55	69	90	100
6'-6"	100	100	100	100	100	100	100	100	100	100	41	51	66	90	100	41	49	61	80	100
7'-0"	100	100	100	100	100	93	100	100	100	100	37	45	58	79	100	37	44	55	72	100
7'-6"	100	100	100	100	100	82	100	100	100	100	33	41	52	70	100	34	40	50	65	90
8'-0"	100	100	100	100	100	73	93	100	100	100	30	37	47	63	92	31	37	46	59	82
8'-6"	100	100	100	100	100	66	83	100	100	100	28	34	43	57	83	29	34	42	54	75
9'-0"	98	100	100	100	100	60	75	100	100	100	26	31	39	52	75	27	32	39	50	69
9'-6"	90	100	100	100	100	54	68	90	100	100	24	29	36	48	69	25	29	36	46	64
10'-0"	82	100	100	100	100	50	63	82	100	100	22	27	33	44	63	23	28	34	43	59
10'-6"	75	95	100	100	100	46	58	75	100	100	21	25	31	41	58	22	26	32	40	55
11'-0"	69	87	100	100	100	43	53	69	96	100	20	24	29	38	54	21	24	30	38	52
11'-6"	64	81	100	100	100	40	50	64	89	100	19	22	27	36	50	20	23	28	36	48
12'-0"	60	75	98	100	100	38	46	60	82	100	18	21	26	33	47	19	22	27	34	46
12'-6"	56	70	92	100	100	35	43	56	76	100	17	20	24	32	44	18	21	25	32	43
13'-0"	53	66	86	100	100	33	41	52	71	100	16	19	23	30	41	17	20	24	30	41

MAXIMUM DESIGN PRESSURE OF A GROMMET SCREEN FOR ANY LENGTH ATTACHED WITH 5/16" HFH ELCO ULTRACON (PSF)

SCREEN SPANS UP TO	CONC. & FILLED CMU (3500 PSI)					CONC. & FILLED CMU (2500 PSI)					HOLLOW CMU (1800 PSI)					TIMBER (S.G. = .55)				
	SPACING (INCHES)					SPACING (INCHES)					SPACING (INCHES)					SPACING (INCHES)				
	8	7	6	5	4	8	7	6	5	4	8	7	6	5	4	8	7	6	5	4
4'-0"	100	100	100	100	100	100	100	100	100	100	100	100	100	100	100	100	100	100	100	100
4'-6"	100	100	100	100	100	100	100	100	100	100	100	100	100	100	100	100	100	100	100	100
5'-0"	100	100	100	100	100	100	100	100	100	100	100	100	100	100	100	100	100	100	100	100
5'-6"	100	100	100	100	100	100	100	100	100	100	100	100	100	100	100	100	100	100	100	100
6'-0"	100	100	100	100	100	100	100	100	100	100	100	100	100	100	100	100	100	100	100	100
6'-6"	100	100	100	100	100	100	100	100	100	100	88	100	100	100	100	100	100	100	100	100
7'-0"	100	100	100	100	100	100	100	100	100	100	79	100	100	100	100	100	100	100	100	100
7'-6"	100	100	100	100	100	100	100	100	100	100	71	100	100	100	100	100	100	100	100	100
8'-0"	100	100	100	100	100	100	100	100	100	100	64	100	100	100	100	100	100	100	100	100
8'-6"	100	100	100	100	100	100	100	100	100	100	59	93	91	100	100	100	100	100	100	100
9'-0"	100	100	100	100	100	100	100	100	100	100	54	86	83	100	100	100	100	100	100	100
9'-6"	100	100	100	100	100	100	100	100	100	100	50	79	77	100	100	100	100	100	100	100
10'-0"	100	100	100	100	100	100	100	100	100	100	46	74	71	94	100	100	100	100	100	100
10'-6"	100	100	100	100	100	100	100	100	100	100	43	69	66	87	100	98	100	100	100	100
11'-0"	100	100	100	100	100	100	100	100	100	100	40	65	61	81	100	90	100	100	100	100
11'-6"	100	100	100	100	100	100	100	100	100	100	38	61	57	76	100	84	100	100	100	100
12'-0"	100	100	100	100	100	96	100	100	100	100	35	57	54	71	100	78	98	100	100	100
12'-6"	100	100	100	100	100	90	100	100	100	100	34	55	51	67	94	74	91	100	100	100
13'-0"	100	100	100	100	100	85	100	100	100	100	32	51	48	63	88	69	86	100	100	100

MAXIMUM DESIGN PRESSURE OF A GROMMET SCREEN FOR ANY LENGTH ATTACHED WITH 1/4-14 ELCO DRIL-FLEX HWH (PSF)

SCREEN SPANS UP TO	1/8" ALUMINUM (6063-T6) 1/8" STEEL (A36)					1/4" ALUMINUM (6063-T6) 1/4" STEEL (A36)				
	SPACING (INCHES)					SPACING (INCHES)				
	8	7	6	5	4	8	7	6	5	4
4'-0"	100	100	100	100	100	100	100	100	100	100
4'-6"	100	100	100	100	100	100	100	100	100	100
5'-0"	100	100	100	100	100	100	100	100	100	100
5'-6"	100	100	100	100	100	100	100	100	100	100
6'-0"	100	100	100	100	100	100	100	100	100	100
6'-6"	100	100	100	100	100	100	100	100	100	100
7'-0"	98	100	100	100	100	100	100	100	100	100
7'-6"	89	100	100	100	100	100	100	100	100	100
8'-0"	82	98	100	100	100	100	100	100	100	100
8'-6"	75	90	100	100	100	100	100	100	100	100
9'-0"	70	84	100	100	100	100	100	100	100	100
9'-6"	65	78	96	100	100	100	100	100	100	100
10'-0"	61	73	89	100	100	100	100	100	100	100
10'-6"	57	68	84	100	100	100	100	100	100	100
11'-0"	53	64	79	100	100	100	100	100	100	100
11'-6"	50	60	74	95	100	100	100	100	100	100
12'-0"	48	57	70	89	100	100	100	100	100	100
12'-6"	45	54	66	85	100	100	100	100	100	100
13'-0"	43	51	63	80	100	100	100	100	100	100

NOTE: USE THESE TABLES TO DETERMINE THE MINIMUN WALL THICKNESS FOR THE MEMBER TO WHICH THE TRACKS OR ANGLES ARE ATTACHED

NOTE: LOADS AND FASTENING SCHEDULES ARE FOR ATTACHING "F" TRACKS OR STUDDED ANGLES TO THE EXISTING STRUCTURE

PROJECT #310-0802

REV	DESCRIPTION	DATE	BY
A	PER EMAIL FROM TDI DATED 06/24/11	08/31/11	TJH

STORM SMART INDUSTRIES
6182 IDLEWILD STREET
FORT MYERS, FL 33966

TITLE: WIND ABATEMENT SYSTEM GROMMET SCREEN / TRACKS, ANCHOR SPACING & DP'S

DRAWN BY: RJA
DATE: 12/14/10
SCALE: N.T.S.
DRAWING NO: SSI0002
REV: A
SHEET: 12 OF 17

PREPARED BY:

PTC PRODUCT DESIGN GROUP, LLC
P.O. Box 520775
Longwood, FL 32752-0775
Texas Cert. of Reg. No. F-13740
Phone: 321.690.1788
Fax: 321.690.1789
Email: info@ptc-corp.com

Robert J. Amoruso, P.E.
Texas P.E. No. 80817

STATE OF TEXAS
ROBERT JAMES AMORUSO
80817
LICENSED
PROFESSIONAL ENGINEER
8/31/11

STRAP SCREEN INSTALLATIONS

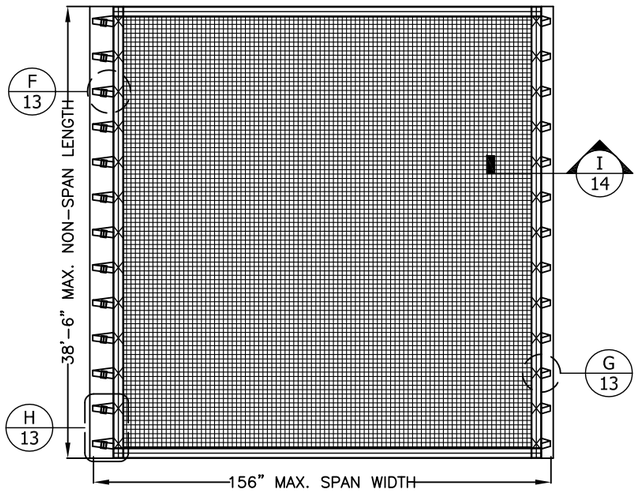

STRAP SCREEN SINGLE PANEL - ELEVATION

TYPICAL 2 SIDED ATTACHMENT - VERTICAL OR HORIZONTAL INSTALLATION - N.T.S.

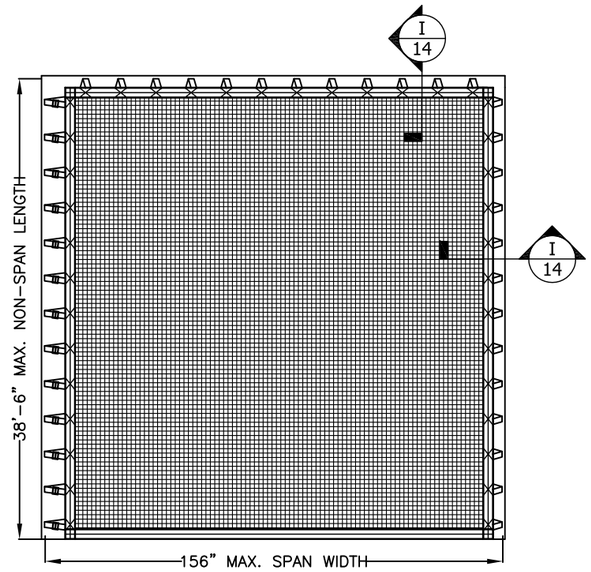

STRAP SCREEN SINGLE PANEL - ELEVATION

3 OR 4 SIDED ATTACHMENT - VERTICAL OR HORIZONTAL INSTALLATION - SCALE N.T.S.

NOTE: FOR 4 SIDED ATTACHMENT THE SPAN IS IN THE SHORT DIMENSION BEWTEEN FASTENERS.

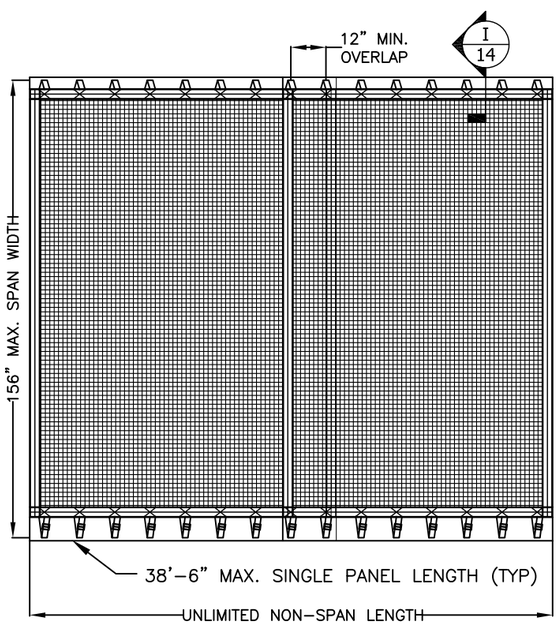

STRAP SCREEN MULTIPLE PANEL - ELEVATION

LAPPED SCREEN - VERTICAL OR HORIZONTAL INSTALLATION - N.T.S.

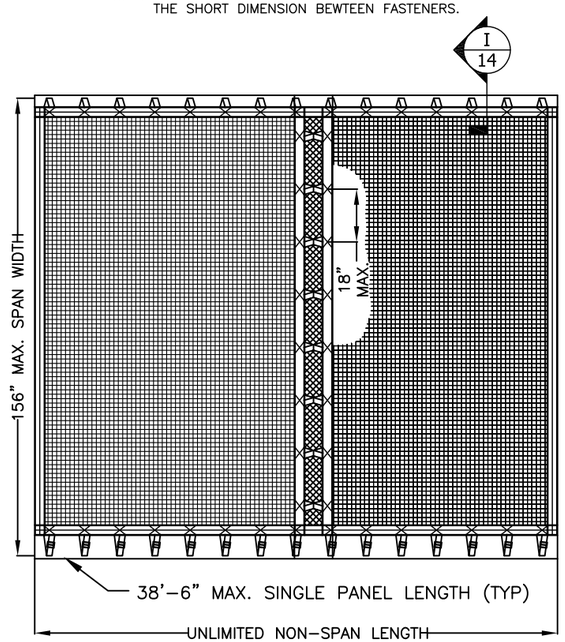

STRAP SCREEN MULTIPLE PANEL - ELEVATION

VERTICAL OR HORIZONTAL INSTALLATION - N.T.S.

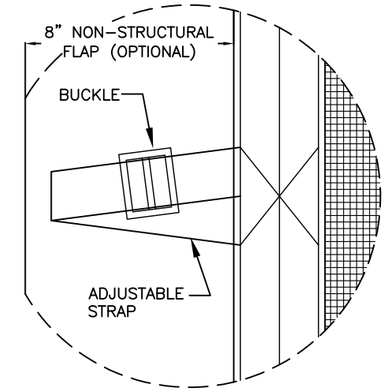

F ADJUSTABLE STRAP - DETAIL

NON-STRUCTURAL FLAP (OPTIONAL) - N.T.S.

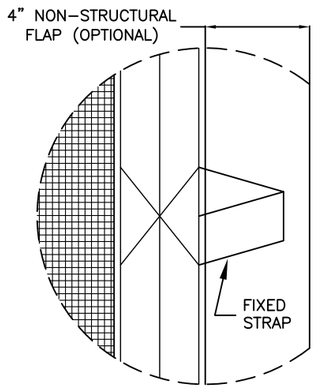

G FIXED STRAP - DETAIL

NON-STRUCTURAL FLAP (OPTIONAL) - N.T.S.

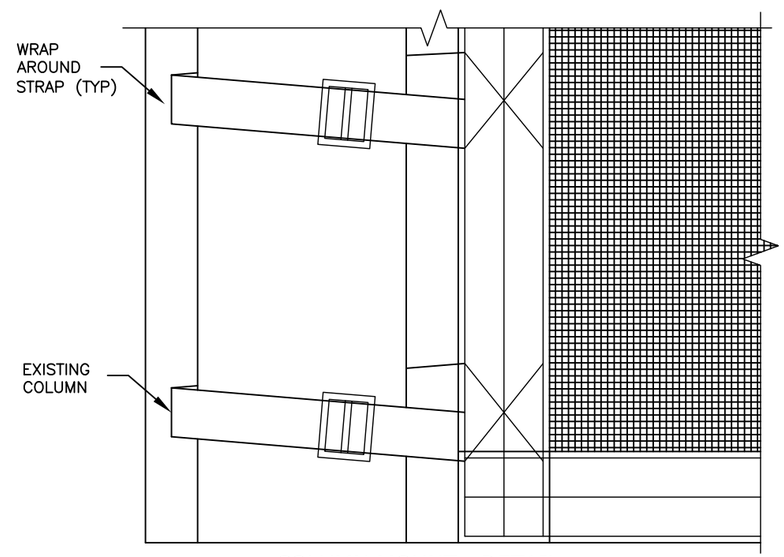

H COLUMN MOUNT - DETAIL

COLUMN STRAP ATTACHMENT (OPTIONAL) - N.T.S.

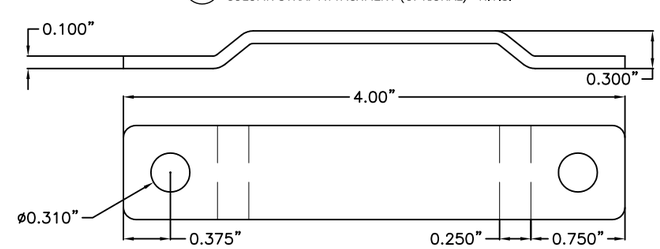

STRAP BRACKET

304 STAINLESS STEEL - SCALE: 1:1

REV	DESCRIPTION	DATE	BY
A	PER EMAIL FROM TDI DATED 06/24/11	08/31/11	TJH

PROJECT #310-0802

STORM SMART INDUSTRIES
6182 IDLEWILD STREET
FORT MYERS, FL 33966

TITLE: WIND ABATEMENT SYSTEM
STRAP SCREEN / ELEVATIONS & SECTIONS

DATE: 12/14/10
DRAWING NO: SSI0002
SHEET: 13 OF 17
DRAWN BY: RJA
SCALE: N.T.S.
REV: A

PREPARED BY:
PTC PRODUCT DESIGN GROUP, LLC
P.O. Box 520775
Longwood, FL 32752-0775
Texas Cert. of Reg. No. F-13740
Phone: 321.690.1788
Fax: 321.690.1789
Email: info@ptc-corp.com

Robert J. Amoruso, P.E.
Texas P.E. No. 80817

STATE OF TEXAS
ROBERT JAMES AMORUSO
80817
LICENSED
PROFESSIONAL ENGINEER
8/31/11

STRAP SCREEN INSTALLATIONS

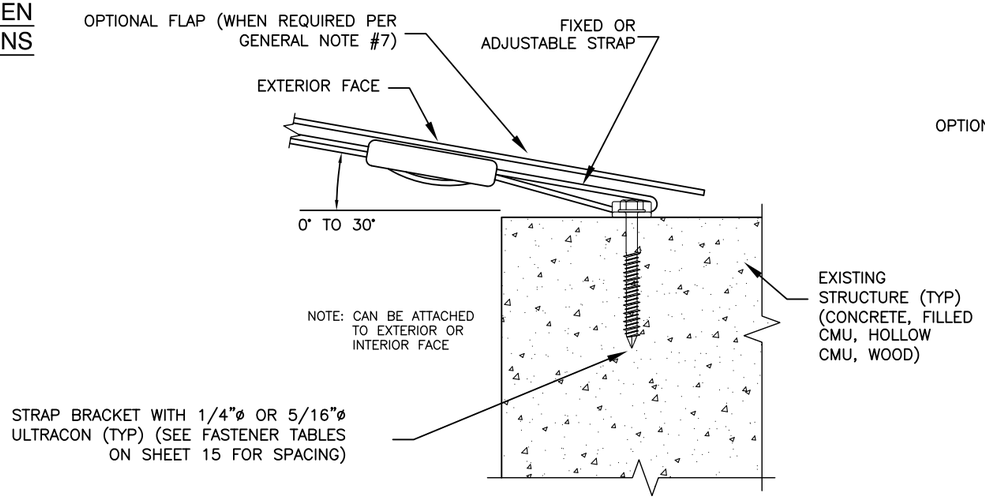

I OUTSIDE MOUNT - SECTION
STRAP BRACKET INSTALLATION (OPTION 1) - N.T.S.

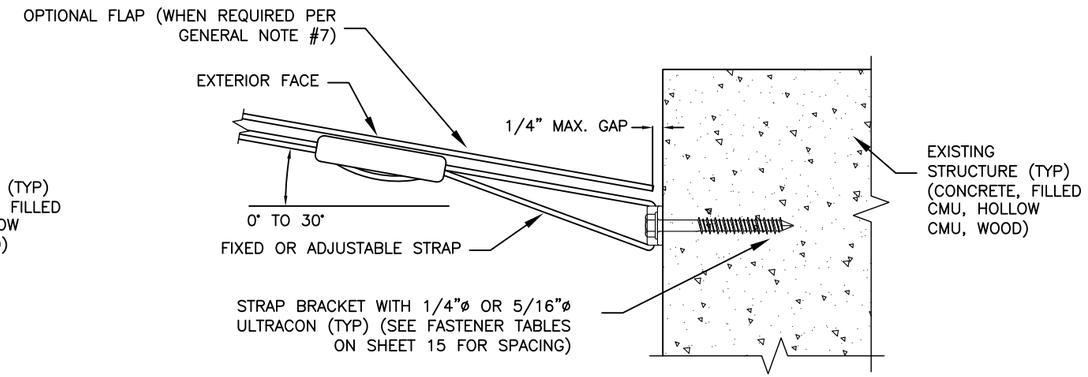

I INSIDE MOUNT - SECTION
STRAP BRACKET INSTALLATION (OPTION 2) - N.T.S.

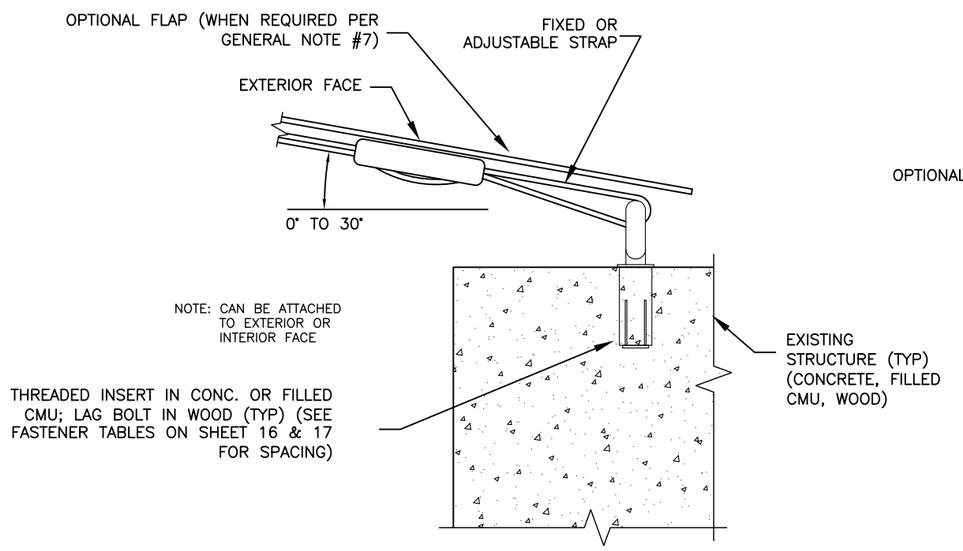

I OUTSIDE MOUNT - SECTION
EYE BOLT INSTALLATION (OPTION 3) - N.T.S.

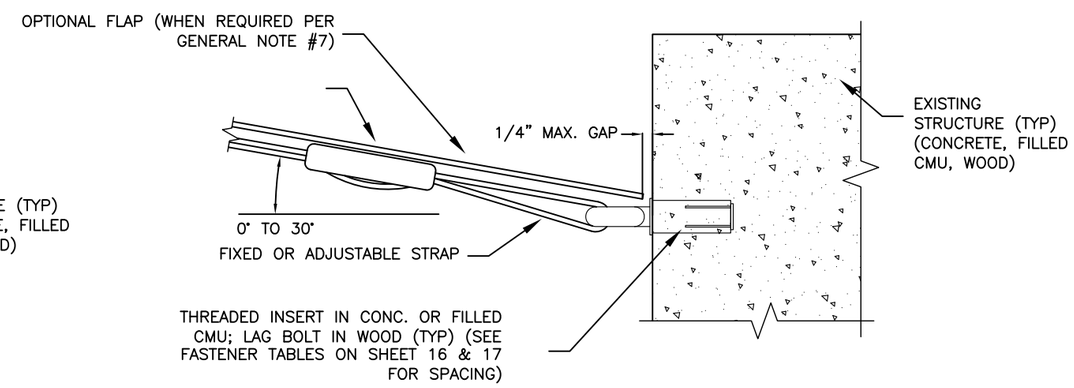

I INSIDE MOUNT - SECTION
EYE BOLT INSTALLATION (OPTION 4) - N.T.S.

PROJECT #310-0802

REV	DESCRIPTION	DATE	BY
A	PER EMAIL FROM TDI DATED 06/24/11	08/31/11	TJH

STORM SMART INDUSTRIES
6182 IDLEWILD STREET
FORT MYERS, FL 33966

TITLE: WIND ABATEMENT SYSTEM STRAP SCREEN / SECTIONS

DRAWN BY: RJA
DATE: 12/14/10
SCALE: N.T.S.
DRAWING NO: SSI0002
REV: A
SHEET: 14 OF 17

PREPARED BY:
PTC PRODUCT DESIGN GROUP, LLC
P.O. Box 520775
Longwood, FL 32752-0775
Texas Cert. of Reg. No. F-13740
Phone: 321.690.1788
Fax: 321.690.1789
Email: info@ptc-corp.com

Robert J. Amoruso, P.E.
Texas P.E. No. 80817

STATE OF TEXAS
ROBERT JAMES AMORUSO
80817
LICENSED
PROFESSIONAL ENGINEER
8/31/11

STRAP SCREEN INSTALLATIONS

NOTE: LOADS AND FASTENING SCHEDULES ARE FOR ATTACHING STRAPS TO THE EXISTING STRUCTURE

MAXIMUM DESIGN PRESSURE OF A STRAP SCREEN FOR ANY LENGTH ATTACHED WITH STRAP BRACKETS AND (2) 5/16" ELCO ULTRACONS (PSF)

SCREEN SPANS UP TO	CONC. & FILLED CMU (3500 PSI)					CONC. & FILLED CMU (2500 PSI)					HOLLOW CMU (1800 PSI)												TIMBER (S.G. = .55)									
	SPACING (INCHES)					SPACING (INCHES)					SPACING (INCHES)												SPACING (INCHES)									
	18	17	16	15	14	18	17	16	15	14	18	17	16	15	14	13	12	11	10	9	8	7	18	17	16	15	14	13	12	11	10	9
4'-0"	100	100	100	100	100	100	100	100	100	100	100	100	100	100	100	100	100	100	100	100	100	100	100	100	100	100	100	100	100	100	100	100
4'-6"	100	100	100	100	100	100	100	100	100	100	100	100	100	100	100	100	100	100	100	100	100	100	100	100	100	100	100	100	100	100	100	100
5'-0"	100	100	100	100	100	100	100	100	100	100	100	100	100	100	100	100	100	100	100	100	100	100	100	100	100	100	100	100	100	100	100	100
5'-6"	100	100	100	100	100	100	100	100	100	100	95	100	100	100	100	100	100	100	100	100	100	100	100	100	100	100	100	100	100	100	100	100
6'-0"	100	100	100	100	100	100	100	100	100	100	83	91	100	100	100	100	100	100	100	100	100	100	100	100	100	100	100	100	100	100	100	100
6'-6"	100	100	100	100	100	100	100	100	100	100	74	80	88	97	100	100	100	100	100	100	100	100	100	100	100	100	100	100	100	100	100	100
7'-0"	100	100	100	100	100	100	100	100	100	100	66	72	79	87	97	100	100	100	100	100	100	100	100	100	100	100	100	100	100	100	100	100
7'-6"	100	100	100	100	100	100	100	100	100	100	59	65	71	78	87	97	100	100	100	100	100	100	94	100	100	100	100	100	100	100	100	100
8'-0"	100	100	100	100	100	100	100	100	100	100	54	59	64	71	79	88	100	100	100	100	100	100	85	93	100	100	100	100	100	100	100	100
8'-6"	100	100	100	100	100	100	100	100	100	100	49	53	59	65	72	80	91	100	100	100	100	100	78	85	93	100	100	100	100	100	100	100
9'-0"	100	100	100	100	100	100	100	100	100	100	45	49	54	59	66	74	83	95	100	100	100	100	72	78	85	94	100	100	100	100	100	100
9'-6"	100	100	100	100	100	100	100	100	100	100	42	45	50	55	61	68	77	88	100	100	100	100	66	72	79	86	96	100	100	100	100	100
10'-0"	100	100	100	100	100	100	100	100	100	100	39	42	46	51	56	63	71	81	94	100	100	100	61	67	73	80	89	99	100	100	100	100
10'-6"	100	100	100	100	100	98	100	100	100	100	36	39	43	47	52	58	66	75	87	100	100	100	57	62	68	75	83	92	100	100	100	100
11'-0"	100	100	100	100	100	92	100	100	100	100	34	37	40	44	49	54	61	70	81	95	100	100	54	58	63	70	77	86	97	100	100	100
11'-6"	100	100	100	100	100	86	93	100	100	100	32	35	38	41	46	51	57	65	76	89	100	100	50	55	59	65	72	81	91	100	100	100
12'-0"	100	100	100	100	100	80	88	96	100	100	30	33	35	39	43	48	54	61	71	83	100	100	47	51	56	61	68	76	85	97	100	100
12'-6"	98	100	100	100	100	75	82	90	100	100	29	31	34	37	40	45	51	58	67	78	94	100	45	49	53	58	64	71	80	91	100	100
13'-0"	93	100	100	100	100	71	77	85	94	100	27	29	32	35	38	43	48	54	63	74	88	100	42	46	50	55	60	67	76	86	99	100

MAXIMUM DESIGN PRESSURE OF A STRAP SCREEN FOR ANY LENGTH ATTACHED WITH STRAP BRACKETS AND (2) 1/4" ELCO ULTRACONS (PSF)

SCREEN SPANS UP TO	CONC. & FILLED CMU (3500 PSI)					CONC. & FILLED CMU (2500 PSI)										HOLLOW CMU (1800 PSI)															TIMBER (S.G. = .55)												
	SPACING (INCHES)					SPACING (INCHES)										SPACING (INCHES)															SPACING (INCHES)												
	18	17	16	15	14	18	17	16	15	14	13	12	11	10	9	18	17	16	15	14	13	12	11	10	9	8	7	6	5	4	18	17	16	15	14	13	12	11	10	9	8	7	6	5	4
4'-0"	100	100	100	100	100	100	100	100	100	100	100	100	100	100	100	75	83	92	100	100	100	100	100	100	100	100	100	100	100	100	84	75	82	90	100	100	100	100	100	100	100	100	100	100	100
4'-6"	100	100	100	100	100	100	100	100	100	100	100	100	100	100	100	62	68	75	84	95	100	100	100	100	100	100	100	100	100	100	69	63	69	76	84	93	100	100	100	100	100	100	100	100	100
5'-0"	100	100	100	100	100	100	100	100	100	100	100	100	100	100	100	52	57	63	70	79	90	100	100	100	100	100	100	100	100	100	58	54	59	65	72	80	90	100	100	100	100	100	100	100	100
5'-6"	100	100	100	100	100	100	100	100	100	100	100	100	100	100	100	45	49	54	60	67	76	88	100	100	100	100	100	100	100	100	50	47	52	56	62	69	78	89	100	100	100	100	100	100	100
6'-0"	100	100	100	100	100	100	100	100	100	100	100	100	100	100	100	39	43	47	52	58	66	75	88	100	100	100	100	100	100	100	44	42	46	50	55	61	69	78	90	100	100	100	100	100	100
6'-6"	100	100	100	100	100	100	100	100	100	100	100	100	100	100	100	35	38	41	46	51	57	66	76	90	100	100	100	100	100	100	39	38	41	45	49	55	61	69	80	93	100	100	100	100	100
7'-0"	100	100	100	100	100	87	97	100	100	100	100	100	100	100	100	31	34	37	41	45	51	58	67	79	95	100	100	100	100	100	35	34	37	40	44	49	55	62	72	84	100	100	100	100	100
7'-6"	100	100	100	100	100	77	85	95	100	100	100	100	100	100	100	28	31	33	37	41	46	52	60	70	84	100	100	100	100	100	32	31	34	37	40	45	50	56	65	76	90	100	100	100	100
8'-0"	100	100	100	100	100	69	76	85	95	100	100	100	100	100	100	26	28	30	33	37	41	47	54	63	75	92	100	100	100	100	29	29	31	34	37	41	46	52	59	69	82	100	100	100	100
8'-6"	100	100	100	100	100	62	68	76	85	97	100	100	100	100	100	24	26	28	31	34	38	43	49	57	68	83	100	100	100	100	27	26	29	31	34	38	42	47	54	63	75	91	100	100	100
9'-0"	100	100	100	100	100	56	62	69	77	87	100	100	100	100	100	22	24	26	28	31	35	39	45	52	62	75	95	100	100	100	25	25	27	29	32	35	39	44	50	58	69	84	100	100	100
9'-6"	100	100	100	100	100	51	56	62	70	79	90	100	100	100	100	21	22	24	26	29	32	36	41	48	56	69	86	100	100	100	23	23	25	27	29	32	36	41	46	54	64	77	97	100	100
10'-0"	100	100	100	100	100	47	52	57	64	72	82	95	100	100	100	19	21	22	24	27	30	33	38	44	52	63	79	100	100	100	21	22	23	25	28	30	34	38	43	50	59	72	90	100	100
10'-6"	100	100	100	100	100	44	48	53	59	66	75	87	100	100	100	18	19	21	23	25	28	31	35	41	48	58	73	95	100	100	20	20	22	24	26	28	32	35	40	47	55	67	84	100	100
11'-0"	97	100	100	100	100	41	44	49	54	61	69	80	94	100	100	17	18	20	21	24	26	29	33	38	45	54	67	88	100	100	19	19	21	22	24	27	30	33	38	44	52	62	78	100	100
11'-6"	89	99	100	100	100	38	41	46	51	57	64	74	86	100	100	16	17	19	20	22	25	27	31	36	42	50	62	81	100	100	18	18	20	21	23	25	28	31	36	41	48	58	73	96	100
12'-0"	83	92	100	100	100	36	39	43	47	53	60	69	80	95	100	15	16	18	19	21	23	26	29	33	39	47	58	75	100	100	17	17	19	20	22	24	27	30	34	39	46	55	69	90	100
12'-6"	77	85	95	100	100	34	37	40	44	49	56	64	74	88	100	14	15	17	18	20	22	24	28	32	37	44	54	70	96	100	16	16	18	19	21	23	25	28	32	37	43	52	65	85	100
13'-0"	72	80	89	99	100	32	34	38	42	46	52	60	69	82	100	14	15	16	17	19	21	23	26	30	35	41	51	66	90	100	15	16	17	18	20	22	24	27	30	35	41	49	61	80	100

PROJECT #310-0802

REV	DESCRIPTION	DATE	BY
A	PER EMAIL FROM TDI DATED 06/24/11	08/31/11	TJH

STORM SMART INDUSTRIES
6182 IDLEWILD STREET
FORT MYERS, FL 33966

TITLE: WIND ABATEMENT SYSTEM STRAP SCREEN / ANCHOR SPACING & DP'S

DRAWN BY: RJA
DATE: 12/14/10
SCALE: N.T.S.
DRAWING NO: SSI0002
REV: A
SHEET: 15 OF 17

PREPARED BY:
PTC PRODUCT DESIGN GROUP, LLC
P.O. Box 520775
Longwood, FL 32752-0775
Texas Cert. of Reg. No. F-13740
Phone: 321.690.1788
Fax: 321.690.1789
Email: info@ptc-corp.com

Robert J. Amoruso, P.E.
Texas P.E. No. 80817

STATE OF TEXAS
ROBERT JAMES AMORUSO
80817
LICENSED
PROFESSIONAL ENGINEER
8/31/11

STRAP SCREEN INSTALLATIONS

NOTE: LOADS AND FASTENING SCHEDULES ARE FOR ATTACHING STRAPS TO THE EXISTING STRUCTURE

MAXIMUM DESIGN PRESSURE OF A STRAP SCREEN FOR ANY LENGTH ATTACHED WITH STRAP BRACKETS AND (2) 1/4" W/ PANELMATE INSERT, POWERS DROP-IN OR CALK-IN (PSF)

SCREEN SPANS UP TO	CONC. & FILLED CMU (3500 PSI)						CONC. & FILLED CMU (2500 PSI)						HOLLOW CMU (1800 PSI)										TIMBER (S.G. = .55)									
	SPACING (INCHES)						SPACING (INCHES)						SPACING (INCHES)										SPACING (INCHES)									
	18	17	16	15	14	13	12	18	17	16	15	14	13	12	18	17	16	15	14	13	12	11	10	9	8	18	17	16	15	14	13	12
4'-0"	100	100	100	100	100	100	100	100	100	100	100	100	100	100	100	100	100	100	100	100	100	100	100	100	100	100	100	100	100	100	100	100
4'-6"	100	100	100	100	100	100	100	100	100	100	100	100	100	100	100	100	100	100	100	100	100	100	100	100	100	83	92	100	100	100	100	100
5'-0"	100	100	100	100	100	100	100	100	100	100	100	100	100	100	100	100	100	100	100	100	100	100	100	100	100	70	77	85	95	100	100	100
5'-6"	100	100	100	100	100	100	100	100	100	100	100	100	100	100	100	100	100	100	100	100	100	100	100	100	100	60	66	73	81	91	100	100
6'-0"	100	100	100	100	100	100	100	100	100	100	100	100	100	100	100	100	100	100	100	100	100	100	100	100	100	52	57	63	70	78	89	100
6'-6"	100	100	100	100	100	100	100	100	100	100	100	100	100	100	100	100	100	100	100	100	100	100	100	100	100	47	51	56	62	69	78	89
7'-0"	100	100	100	100	100	100	100	100	100	100	100	100	100	100	96	100	100	100	100	100	100	100	100	100	100	42	45	50	55	61	69	78
7'-6"	100	100	100	100	100	100	100	100	100	100	100	100	100	100	87	94	100	100	100	100	100	100	100	100	100	38	41	45	49	55	62	70
8'-0"	100	100	100	100	100	100	100	100	100	100	100	100	100	100	79	86	94	100	100	100	100	100	100	100	100	34	37	41	45	50	56	63
8'-6"	100	100	100	100	100	100	100	100	100	100	100	100	100	100	72	78	86	94	100	100	100	100	100	100	100	32	34	37	41	45	51	57
9'-0"	100	100	100	100	100	100	100	94	100	100	100	100	100	100	66	72	79	87	96	100	100	100	100	100	100	29	32	34	38	42	47	52
9'-6"	100	100	100	100	100	100	100	86	95	100	100	100	100	100	61	66	73	80	89	99	100	100	100	100	100	27	29	32	35	39	43	48
10'-0"	100	100	100	100	100	100	100	79	87	96	99	100	100	100	57	61	67	74	82	92	100	100	100	100	100	25	27	30	33	36	40	45
10'-6"	97	100	100	100	100	100	100	73	80	89	92	100	100	100	53	57	63	69	76	85	96	100	100	100	100	24	26	28	30	33	37	42
11'-0"	89	99	100	100	100	100	100	67	74	82	87	100	100	100	49	53	58	64	71	80	90	100	100	100	100	22	24	26	29	31	35	39
11'-6"	83	91	100	100	100	100	100	62	69	76	82	95	100	100	46	50	55	60	67	74	84	96	100	100	100	21	23	25	27	29	33	37
12'-0"	77	85	94	100	100	100	100	58	64	71	77	89	100	100	43	47	51	57	63	70	79	90	100	100	100	20	22	23	25	28	31	34
12'-6"	72	79	88	98	100	100	100	55	60	66	73	83	94	100	41	44	49	53	59	66	74	84	97	100	100	19	20	22	24	26	29	33
13'-0"	67	74	82	92	100	100	100	51	56	62	69	77	88	100	39	42	46	50	56	62	70	80	92	100	100	18	19	21	23	25	28	31

SCREEN SPANS UP TO	HOLLOW CMU (1800 PSI)										TIMBER (S.G. = .55)									
	SPACING (INCHES)										SPACING (INCHES)									
	11	10	9	8	18	17	16	15	14	13	12	11	10	9	8	18	17	16	15	14
4'-0"	100	100	100	100	100	100	100	100	100	100	100	100	100	100	100	100	100	100	100	100
4'-6"	100	100	100	100	100	100	100	100	100	100	100	100	100	100	100	100	100	100	100	100
5'-0"	100	100	100	100	100	100	100	100	100	100	100	100	100	100	100	100	100	100	100	100
5'-6"	100	100	100	100	100	100	100	100	100	100	100	100	100	100	100	100	100	100	100	100
6'-0"	100	100	100	100	100	100	100	100	100	100	100	100	100	100	100	100	100	100	100	100
6'-6"	100	100	100	100	100	100	100	100	100	100	100	100	100	100	100	100	100	100	100	100
7'-0"	100	100	100	100	100	100	100	100	100	100	100	100	100	100	100	100	100	100	100	100
7'-6"	100	100	100	100	100	100	100	100	100	100	100	100	100	100	100	100	100	100	100	100
8'-0"	100	100	100	100	100	100	100	100	100	100	100	100	100	100	100	100	100	100	100	100
8'-6"	100	100	100	100	100	100	100	100	100	100	100	100	100	100	100	100	100	100	100	100
9'-0"	100	100	100	100	100	100	100	100	100	100	100	100	100	100	100	100	100	100	100	100
9'-6"	100	100	100	100	100	100	100	100	100	100	100	100	100	100	100	100	100	100	100	100
10'-0"	100	100	100	100	100	100	100	100	100	100	100	100	100	100	100	100	100	100	100	100
10'-6"	100	100	100	100	100	100	100	100	100	100	100	100	100	100	100	100	100	100	100	100
11'-0"	100	100	100	100	100	100	100	100	100	100	100	100	100	100	100	100	100	100	100	100
11'-6"	100	100	100	100	100	100	100	100	100	100	100	100	100	100	100	100	100	100	100	100
12'-0"	100	100	100	100	100	100	100	100	100	100	100	100	100	100	100	100	100	100	100	100
12'-6"	100	100	100	100	100	100	100	100	100	100	100	100	100	100	100	100	100	100	100	100
13'-0"	100	100	100	100	100	100	100	100	100	100	100	100	100	100	100	100	100	100	100	100

MAXIMUM DESIGN PRESSURE OF A STRAP SCREEN FOR ANY LENGTH ATTACHED WITH STRAP BRACKETS AND (2) 1/4-14 ELCO DRIL-FLEX (PSF)

SCREEN SPANS UP TO	1/8" ALUMINUM (6063-T6) 1/8" STEEL (A36)											1/4" ALUMINUM (6063-T6) 1/4" STEEL (A36)				
	SPACING (INCHES)											SPACING (INCHES)				
	18	17	16	15	14	13	12	11	10	9	8	18	17	16	15	14
4'-0"	100	100	100	100	100	100	100	100	100	100	100	100	100	100	100	100
4'-6"	100	100	100	100	100	100	100	100	100	100	100	100	100	100	100	100
5'-0"	100	100	100	100	100	100	100	100	100	100	100	100	100	100	100	100
5'-6"	100	100	100	100	100	100	100	100	100	100	100	100	100	100	100	100
6'-0"	100	100	100	100	100	100	100	100	100	100	100	100	100	100	100	100
6'-6"	100	100	100	100	100	100	100	100	100	100	100	100	100	100	100	100
7'-0"	100	100	100	100	100	100	100	100	100	100	100	100	100	100	100	100
7'-6"	92	100	100	100	100	100	100	100	100	100	100	100	100	100	100	100
8'-0"	84	91	99	100	100	100	100	100	100	100	100	100	100	100	100	100
8'-6"	78	84	91	100	100	100	100	100	100	100	100	100	100	100	100	100
9'-0"	72	78	84	92	100	100	100	100	100	100	100	100	100	100	100	100
9'-6"	67	72	78	86	94	100	100	100	100	100	100	100	100	100	100	100
10'-0"	62	67	73	80	88	97	100	100	100	100	100	100	100	100	100	100
10'-6"	59	63	68	75	82	91	100	100	100	100	100	100	100	100	100	100
11'-0"	55	59	64	70	77	85	95	100	100	100	100	100	100	100	100	100
11'-6"	52	56	61	66	73	80	89	100	100	100	100	100	100	100	100	100
12'-0"	49	53	57	62	68	76	84	95	100	100	100	100	100	100	100	100
12'-6"	46	50	54	59	65	72	80	90	100	100	100	100	100	100	100	100
13'-0"	44	48	52	56	62	68	76	85	97	100	100	100	100	100	100	100

MAXIMUM DESIGN PRESSURE OF A STRAP SCREEN FOR ANY LENGTH ATTACHED WITH 3/8" EYE-HOOKS W/ POWERS DROPIN, CALK-IN, OR LAG BOLT (PSF)

SCREEN SPANS UP TO	CONC. & FILLED CMU (3500 PSI)										CONC. & FILLED CMU (2500 PSI)												TIMBER (S.G. = .55)											
	SPACING (INCHES)										SPACING (INCHES)												SPACING (INCHES)											
	18	17	16	15	14	13	12	11	10	9	8	18	17	16	15	14	13	12	11	10	9	8	7	6	18	17	16	15	14	13	12	11	10	9	8	7	6
4'-0"	100	100	100	100	100	100	100	100	100	100	100	100	100	100	100	100	100	100	100	100	100	100	100	100	66	73	81	91	100	100	100	100	100	100	100	100	100
4'-6"	100	100	100	100	100	100	100	100	100	100	100	100	100	100	100	100	100	100	100	100	100	100	100	100	55	60	66	74	83	95	100	100	100	100	100	100	100
5'-0"	100	100	100	100	100	100	100	100	100	100	100	100	100	100	100	100	100	100	100	100	100	100	100	100	46	51	56	62	70	79	91	100	100	100	100	100	100
5'-6"	100	100	100	100	100	100	100	100	100	100	100	100	100	100	100	100	100	100	100	100	100	100	100	100	40	44	48	53	59	67	77	90	100	100	100	100	100
6'-0"	100	100	100	100	100	100	100	100	100	100	100	88	96	100	100	100	100	100	100	100	100	100	100	100	35	38	42	46	52	58	66	77	91	100	100	100	100
6'-6"	100	100	100	100	100	100	100	100	100	100	100	78	85	93	100	100	100	100	100	100	100	100	100	100	32	34	37	41	46	51	58	67	79	95	100	100	100
7'-0"	91	99	100	100	100	100	100	100	100	100	100	70	76	84	92	100	100	100	100	100	100	100	100	100	28	31	34	37	41	46	52	59	70	83	100	100	100
7'-6"	82	89	98	100	100	100	100	100	100	100	100	63	69	75	83	92	100	100	100	100	100	100	100	100	26	28	30	33	37	41	46	53	62	74	91	100	100
8'-0"	74	81	89	98	100	100	100	100	100	100	100	57	62	68	75	84	93	100	100	100	100	100	100	100	24	26	28	30	34	37	42	48	56	66	81	100	100
8'-6"	68	74	81	89	99	100	100	100	100	100	100	52	57	62	69	76	85	96	100	100	100	100	100	100	22	24	26	28	31	34	38	44	51	60	73	92	100
9'-0"	62	68	74	82	91	100	100	100	100	100	100	48	52	57	63	70	78	88	100	100	100	100	100	100	20	22	24	26	28	32	35	40	46	55	66	83	100
9'-6"	58	63	69	76	84	94	100	100	100	100	100	45	48	53	58	64	72	81	93	100	100	100	100	100	19	20	22	24	26	29	33	37	43	50	61	76	100
10'-0"	53	58	63	70	78	87	98	100	100	100	100	41	45	49	54	60	67	75	86	99	100	100	100	100	18	19	21	23	25	27	30	34	40	46	56	70	91
10'-6"	50	54	59	65	72	81	91	100	100	100	100	39	42	46	50	56	62	70	80	92	100	100	100	100	17	18	19	21	23	26	28	32	37	43	52	64	83
11'-0"	46	50	55	61	67	75	85	97	100	100	100	36	39	43	47	52	58	65	74	86	100	100	100	100	16	17	18	20	22	24	27	30	34	40	48	59	77
11'-6"	44	47	52	57	63	70	79	90	100	100	100	34	37	40	44	49	54	61	70	80	94	100	100	100	15	16	17	19	21	23	25	28	32	38	45	55	71
12'-0"	41	44	49	53	59	66	74	85	98	100	100	32	35	38	41	46	51	57	65	75	88	100	100	100	14	15	16	18	19	21	24	27	30	35	42	52	66
12'-6"	39	42	46	50	56	62	70	80	92	100	100	30	33	36	39	43	48	54	61	71	83	99	100	100	13	14	16	17	18	20	23	25	29	33	40	48	62
13'-0"	37	40	43	47	52	59	66	75	87	100	100	29	31	34	37	41	45	51	58	67	78	93	100	100	13	14	15	16	18	19	21	24	27	32	37	46	58

NOTE: USE THESE TABLES TO DETERMINE THE MINIMUN WALL THICKNESS FOR TO WHICH THE MEMBER THE STRAP BRACKET IS ATTACHED

REV	DESCRIPTION	DATE	BY
A	PER EMAIL FROM TDI DATED 06/24/11	08/31/11	TJH

PROJECT #310-0802

STORM SMART INDUSTRIES
6182 IDLEWILD STREET
FORT MYERS, FL 33966

TITLE: STRAP SCREEN WIND ABATEMENT SYSTEM / ANCHOR SPACING & DP'S

DRAWN BY: RJA
DATE: 12/14/10
SCALE: N.T.S.
DRAWING NO: SSI0002
REV: A
SHEET: 16 OF 17

PREPARED BY:

PTC PRODUCT DESIGN GROUP, LLC
P.O. Box 520775
Longwood, FL 32752-0775
Texas Cert. of Reg. No. F-13740
Phone: 321.690.1788
Fax: 321.690.1789
Email: info@ptc-corp.com

Robert J. Amoruso, P.E.
Texas P.E. No. 80817

STATE OF TEXAS
ROBERT JAMES AMORUSO
80817
LICENSED
PROFESSIONAL ENGINEER
8/31/11

STRAP SCREEN INSTALLATIONS

NOTE: LOADS AND FASTENING SCHEDULES ARE FOR ATTACHING STRAPS TO THE EXISTING STRUCTURE

MAXIMUM DESIGN PRESSURE OF A STRAP SCREEN FOR ANY LENGTH ATTACHED WITH 1/2" EYE-HOOKS W/ POWERS DROPIN, CALK-IN, OR LAG BOLT (PSF)

SCREEN SPANS UP TO	CONC. & FILLED CMU (3500 PSI)									CONC. & FILLED CMU (2500 PSI)									TIMBER (S.G. = .55)												
	SPACING (INCHES)									SPACING (INCHES)									SPACING (INCHES)												
	18	17	16	15	14	13	12	11	10	18	17	16	15	14	13	12	11	10	18	17	16	15	14	13	12	11	10	9	8	7	6
4'-0"	100	100	100	100	100	100	100	100	100	100	100	100	100	100	100	100	100	100	100	100	100	100	100	100	100	100	100	100	100	100	100
4'-6"	100	100	100	100	100	100	100	100	100	100	100	100	100	100	100	100	100	100	100	100	100	100	100	100	100	100	100	100	100	100	100
5'-0"	100	100	100	100	100	100	100	100	100	100	100	100	100	100	100	100	100	100	91	100	100	100	100	100	100	100	100	100	100	100	100
5'-6"	100	100	100	100	100	100	100	100	100	100	100	100	100	100	100	100	100	100	77	85	94	100	100	100	100	100	100	100	100	100	100
6'-0"	100	100	100	100	100	100	100	100	100	100	100	100	100	100	100	100	100	100	67	73	81	91	100	100	100	100	100	100	100	100	100
6'-6"	100	100	100	100	100	100	100	100	100	100	100	100	100	100	100	100	100	100	59	64	71	79	89	100	100	100	100	100	100	100	100
7'-0"	100	100	100	100	100	100	100	100	100	100	100	100	100	100	100	100	100	100	52	57	63	70	78	89	100	100	100	100	100	100	100
7'-6"	100	100	100	100	100	100	100	100	100	95	100	100	100	100	100	100	100	100	47	51	56	62	70	79	91	100	100	100	100	100	100
8'-0"	98	100	100	100	100	100	100	100	100	86	94	100	100	100	100	100	100	100	43	46	51	56	63	71	81	94	100	100	100	100	100
8'-6"	89	98	100	100	100	100	100	100	100	79	86	94	100	100	100	100	100	100	39	42	46	51	57	64	73	85	100	100	100	100	100
9'-0"	82	89	98	100	100	100	100	100	100	72	79	86	95	100	100	100	100	100	36	39	43	47	52	59	67	77	91	100	100	100	100
9'-6"	76	82	90	100	100	100	100	100	100	67	73	80	88	97	100	100	100	100	33	36	39	43	48	54	61	70	83	99	100	100	100
10'-0"	70	76	84	92	100	100	100	100	100	62	67	74	81	90	100	100	100	100	31	34	37	40	44	50	56	65	76	91	100	100	100
10'-6"	65	71	78	86	95	100	100	100	100	58	63	69	75	84	93	100	100	100	29	31	34	37	41	46	52	60	70	83	100	100	100
11'-0"	61	66	72	80	89	99	100	100	100	54	59	64	70	78	87	98	100	100	27	29	32	35	39	43	49	56	65	77	94	100	100
11'-6"	57	62	68	75	83	93	100	100	100	51	55	60	66	73	82	92	100	100	26	28	30	33	36	40	45	52	60	71	87	100	100
12'-0"	53	58	64	70	78	87	98	100	100	48	52	56	62	69	77	86	98	100	24	26	28	31	34	38	43	49	56	67	81	100	100
12'-6"	50	55	60	66	73	82	92	100	100	45	49	53	58	65	72	81	92	100	23	25	27	29	32	36	40	46	53	62	76	95	100
13'-0"	47	52	56	62	69	77	87	99	100	42	46	50	55	61	68	77	87	100	22	23	25	28	30	34	38	43	50	59	71	89	100

MAXIMUM DESIGN PRESSURE OF A STRAP SCREEN FOR ANY LENGTH ATTACHED WITH 3/8" EYE-HOOKS W/ ITW MULTI-SET II (PSF)

SCREEN SPANS UP TO	CONC. & FILLED CMU (3500 PSI)									CONC. & FILLED CMU (2500 PSI)										
	SPACING (INCHES)									SPACING (INCHES)										
	18	17	16	15	14	13	12	11	10	18	17	16	15	14	13	12	11	10	9	8
4'-0"	100	100	100	100	100	100	100	100	100	100	100	100	100	100	100	100	100	100	100	100
4'-6"	100	100	100	100	100	100	100	100	100	100	100	100	100	100	100	100	100	100	100	100
5'-0"	100	100	100	100	100	100	100	100	100	100	100	100	100	100	100	100	100	100	100	100
5'-6"	100	100	100	100	100	100	100	100	100	100	100	100	100	100	100	100	100	100	100	100
6'-0"	100	100	100	100	100	100	100	100	100	100	100	100	100	100	100	100	100	100	100	100
6'-6"	100	100	100	100	100	100	100	100	100	100	100	100	100	100	100	100	100	100	100	100
7'-0"	100	100	100	100	100	100	100	100	100	100	100	100	100	100	100	100	100	100	100	100
7'-6"	100	100	100	100	100	100	100	100	100	98	100	100	100	100	100	100	100	100	100	100
8'-0"	94	100	100	100	100	100	100	100	100	88	97	100	100	100	100	100	100	100	100	100
8'-6"	84	93	100	100	100	100	100	100	100	80	88	97	100	100	100	100	100	100	100	100
9'-0"	76	84	94	100	100	100	100	100	100	72	80	88	98	100	100	100	100	100	100	100
9'-6"	70	77	85	96	100	100	100	100	100	66	73	81	90	100	100	100	100	100	100	100
10'-0"	64	70	78	87	99	100	100	100	100	61	67	74	82	92	100	100	100	100	100	100
10'-6"	59	65	72	80	91	100	100	100	100	56	62	68	76	85	96	100	100	100	100	100
11'-0"	55	60	66	74	83	95	100	100	100	52	57	63	70	79	89	100	100	100	100	100
11'-6"	51	56	62	69	77	88	100	100	100	49	54	59	65	73	83	95	100	100	100	100
12'-0"	48	52	57	64	72	82	94	100	100	46	50	55	61	68	77	88	100	100	100	100
12'-6"	45	49	54	60	67	76	87	100	100	43	47	52	57	64	72	82	95	100	100	100
13'-0"	42	46	50	56	63	71	82	95	100	41	44	49	54	60	68	77	89	100	100	100

MAXIMUM DESIGN PRESSURE OF A STRAP SCREEN FOR ANY LENGTH ATTACHED WITH 1/2" EYE-HOOKS W/ ITW MULTI-SET II (PSF)

SCREEN SPANS UP TO	CONC. & FILLED CMU (3500 PSI)					CONC. & FILLED CMU (2500 PSI)						
	SPACING (INCHES)					SPACING (INCHES)						
	18	17	16	15	14	18	17	16	15	14	13	12
4'-0"	100	100	100	100	100	100	100	100	100	100	100	100
4'-6"	100	100	100	100	100	100	100	100	100	100	100	100
5'-0"	100	100	100	100	100	100	100	100	100	100	100	100
5'-6"	100	100	100	100	100	100	100	100	100	100	100	100
6'-0"	100	100	100	100	100	100	100	100	100	100	100	100
6'-6"	100	100	100	100	100	100	100	100	100	100	100	100
7'-0"	100	100	100	100	100	100	100	100	100	100	100	100
7'-6"	100	100	100	100	100	100	100	100	100	100	100	100
8'-0"	100	100	100	100	100	100	100	100	100	100	100	100
8'-6"	100	100	100	100	100	100	100	100	100	100	100	100
9'-0"	100	100	100	100	100	100	100	100	100	100	100	100
9'-6"	100	100	100	100	100	100	100	100	100	100	100	100
10'-0"	100	100	100	100	100	100	100	100	100	100	100	100
10'-6"	100	100	100	100	100	95	100	100	100	100	100	100
11'-0"	100	100	100	100	100	88	96	100	100	100	100	100
11'-6"	95	100	100	100	100	82	90	99	100	100	100	100
12'-0"	88	98	100	100	100	77	84	92	100	100	100	100
12'-6"	82	91	100	100	100	72	79	86	96	100	100	100
13'-0"	77	85	94	100	100	67	74	81	90	100	100	100

PROJECT #310-0802

REV	DESCRIPTION	DATE	BY
A	PER EMAIL FROM TDI DATED 06/24/11	08/31/11	TJH

STORM SMART INDUSTRIES
6182 IDLEWILD STREET
FORT MYERS, FL 33966

TITLE: WIND ABATEMENT SYSTEM STRAP SCREEN / ANCHOR SPACING & DP'S

DRAWN BY: RJA
DATE: 12/14/10
SCALE: N.T.S.
DRAWING NO: SSI0002
REV: A
SHEET: 17 OF 17

PREPARED BY:
PTC PRODUCT DESIGN GROUP, LLC
P.O. Box 520775
Longwood, FL 32752-0775
Texas Cert. of Reg. No. F-13740
Phone: 321.690.1788
Fax: 321.690.1789
Email: info@ptc-corp.com

Robert J. Amoruso, P.E.
Texas P.E. No. 80817

STATE OF TEXAS
ROBERT JAMES AMORUSO
80817
LICENSED
PROFESSIONAL ENGINEER
8/31/11