GENERAL NOTES:

1. THE STORM PANEL SHUTTER SYSTEM DESCRIBED IN THESE PRODUCT EVALUATION DOCUMENTS HAS BEEN VERIFIED FOR COMPLIANCE WITH THE 2006 INTERNATIONAL BUILDING CODE (IBC) AND THE INTERNATIONAL RESIDENTIAL CODE (IRC) WITH TEXAS REVISIONS EFFECTIVE JANUARY 1, 2008. THIS SHUTTER SYSTEM IS ACCEPTABLE FOR THE SEAWARD, INLAND I AND INLAND II ZONES, AS DEFINED BY THE TEXAS DEPARTMENT OF INSURANCE. THIS SHUTTER PRODUCT MEETS MISSILE LEVEL "D" REQUIREMENTS AND INCLUDES WIND ZONE 4, AS DEFINED IN ASTM E 1996. THE FOLLOWING CONDITIONS WILL APPLY:

2. NO INCREASE IN ALLOWABLE STRESS HAS BEEN USED IN THE DESIGN OF THESE PRODUCTS. WIND LOAD DURATION FACTOR Cd = 1.6 WAS USED FOR WOOD LAG SCREW DESIGN.

3. THIS SHUTTER SYSTEM HAS BEEN TESTED FOR LARGE MISSILE IMPACT RESISTANCE AND CYCLIC PRESSURE LOADINGS IN CONFORMANCE WITH MIAMI-DADE COUNTY, FLORIDA TAS 201 AND TAS 203 AND FOR UNIFORM STATIC AIR PRESSURE IN CONFORMANCE WITH MIAMI-DADE COUNTY, FLORIDA TAS 202.

4. DETERMINE THE POSITIVE AND NEGATIVE DESIGN LOADS TO USE WHEN REFERENCING THESE DOCUMENTS, IN ACCORDANCE WITH THE GOVERNING CODE AND GOVERNING WIND VELOCITY. FOR WIND WIND LOAD CALCULATIONS, IN ACCORDANCE WITH ASCE 7, A DIRECTIONALITY FACTOR OF Kd =0.85 SHALL BE USED.

5. THESE APPROVAL DOCUMENTS ARE GENERIC AND DO NOT INCLUDE INFORMATION FOR SITE-SPECIFIC APPLICATION OF THIS SHUTTER SYSTEM.

6. THESE APPROVAL DOCUMENTS ARE SUITABLE TO BE APPLIED BY THE CONTRACTOR, PROVIDED THE CONTRACTOR DOES NOT DEVIATE FROM THE CONDITIONS DETAILED HEREIN AND THE CONTRACTOR VERIFIES THAT THE EXISTING STRUCTURE DOES NOT DEVIATE IN EITHER FORM OR MATERIAL FROM THE STRUCTURAL SUBSTRATES DETAILED HEREIN.

7. ANY MODIFICATIONS OR ADDITIONS TO THESE APPROVAL DOCUMENTS WILL VOID THEM.

8. WHEN THE SITE CONDITIONS DEVIATE FROM THESE APPROVAL DOCUMENTS, THE BUILDING OFFICIAL MAY REQUIRE THAT SITE SPECIFIC DOCUMENTS BE PREPARED, SIGNED, DATED AND SEALED BY A LICENSED ENGINEER OR REGISTERED ARCHITECT, WHICH DETAIL AND JUSTIFY THE DEVIATION, AS A CONDITION TO THE BUILDING OFFICIAL GRANTING HIS/HER APPROVAL. SITE SPECIFIC DOCUMENTS MUST BE USED IN CONJUNCTION WITH THESE APPROVED DOCUMENTS.

9. PERMIT HOLDER SHALL VERIFY THE ADEQUACY OF THE EXISTING STRUCTURE TO WITHSTAND THE RELOCATED, SUPERIMPOSED LOADS ON THE STRUCTURE, AS A RESULT OF THE INSTALLATION OF THIS SHUTTER SYSTEM.

10. EACH STORM PANEL SHALL BE PERMANENTLY LABELED AS FOLLOWS:
CAT 5 HURRICANE PRODUCTS, LLC - BRADENTON, FL
0.050" ALUMINUM STORM PANEL
ASTM E1996 MISSILE LEVEL D - IMPACT RESISTANT
TDI EVALUATED

11. ALL EXTRUSIONS SHOWN SHALL BE 6063-T6 ALUMINUM ALLOY, U.O.N., WITH A MINIMUM Fy OF 25.0 KSI.

12. STORM PANELS SHALL BE 3004-H32 OR H34 OR EQUAL ALUMINUM ALLOY, WITH A MINIMUM THICKNESS OF 0.050" AND Fy = 25.0 KSI.

13. ALL BOLTS AND WASHERS SHALL BE STAINLESS STEEL WITH A MINIMUM TENSILE STRENGTH OF 60 KSI, U.O.N.

14. TOP AND BOTTOM DETAILS MAY BE INTERCHANGED AS FIELD CONDITIONS REQUIRE EXCEPT FOR U HEADERS AND h HEADERS, WHICH CAN ONLY BE USED AS THE TOP MOUNTING CONDITION WITH STORM PANELS IN A VERTICAL POSITION (CORRUGATIONS RUNNING VERTICALLY.

15. STORM PANELS MAY BE MOUNTED HORIZONTALLY WITH ALL EXTRUSIONS, EXCEPT FOR THE U AND h HEADERS.

16. AT LEAST ONE WARNING NOTE PER OPENING SHALL BE PLACED IN A CONSPICUOUS LOCATION ON ANY OF THE COMPONENTS OF THE STORM PANEL SYSTEM, IF THE MOUNTING DETAIL CALLS FOR BOLTS TO HOLD THE PANELS TOGETHER AT OVERLAPS. SEE DETAILS N AND P ON PAGE 3. THIS WARNING NOTE IS TO ADVISE THE HOME OWNER OR TENANT THAT THE STORM PANELS WILL NOT OFFER HURRICANE PROTECTION UNLESS ALL REINFORCING BOLTS ARE PROPERLY INSTALLED, AS SHOWN ON THESE APPROVED DRAWINGS.

17. FOR WIND ZONES 1, 2 AND 3, THIS STORM PANEL SYSTEM MAY USE ANY COMBINATION OF HEADERS AND SILL MOUNTING CONDITIONS IS TO BE CONSIDERED AS NON-POROUS (LESS THAN 10% POROSITY). THE MINIMUM PANEL LENGTH TO INSURE COMPLIANCE 27 INCHES.

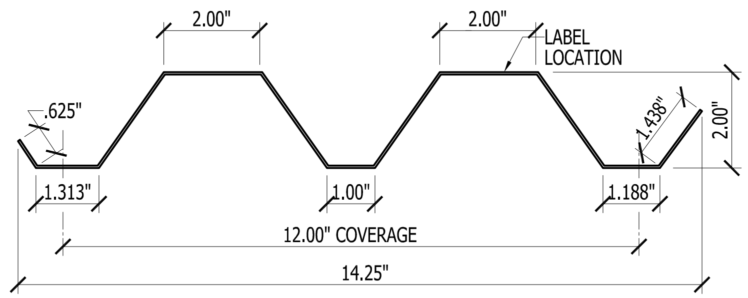

1 **STORM PANEL**
SCALE: 3" = 1'-0"

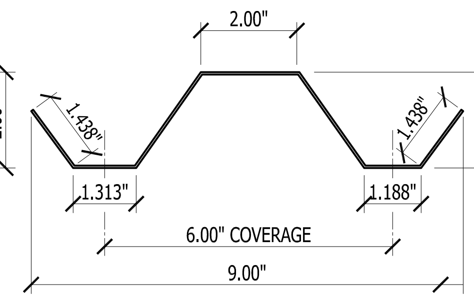

2 **HALF STORM PANEL**
SCALE: 3" = 1'-0"

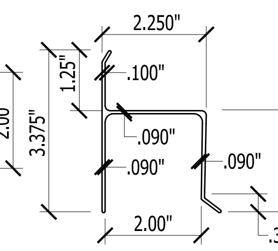

3 **"h" HEADER**
SCALE: 3" = 1'-0"

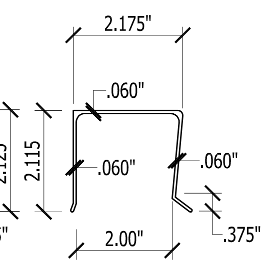

4 **"U" HEADER**
SCALE: 3" = 1'-0"

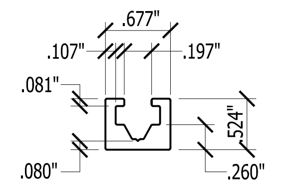

5 **PRE-STUCCO TRACK**
SCALE : HALF SIZE

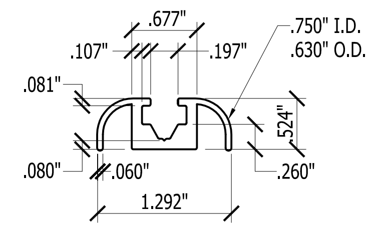

6 **FINISH TRACK**
SCALE : HALF SIZE

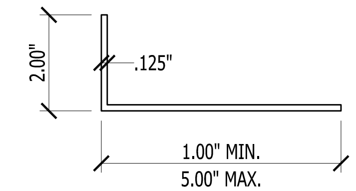

7 **ANGLE**
SCALE: 3" = 1'-0"

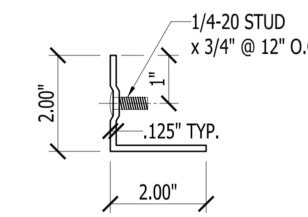

8 **STUD ANGLE**
SCALE: 3" = 1'-0"

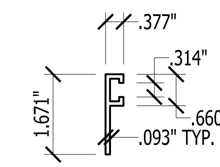

9 **"F" TRACK**
SCALE: 3" = 1'-0"

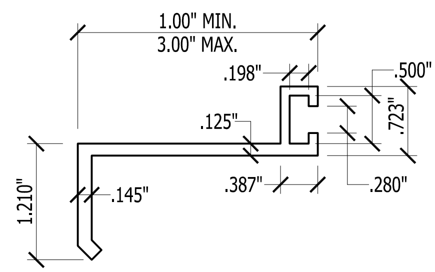

10 **BUILD-OUT F-TRACK**
SCALE : HALF SIZE

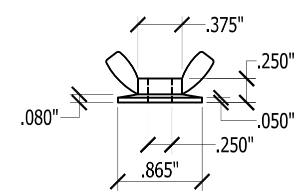

(ZAMAC 3 ALLOY)

11 **WASHERED WINGNUT**
SCALE : HALF SIZE

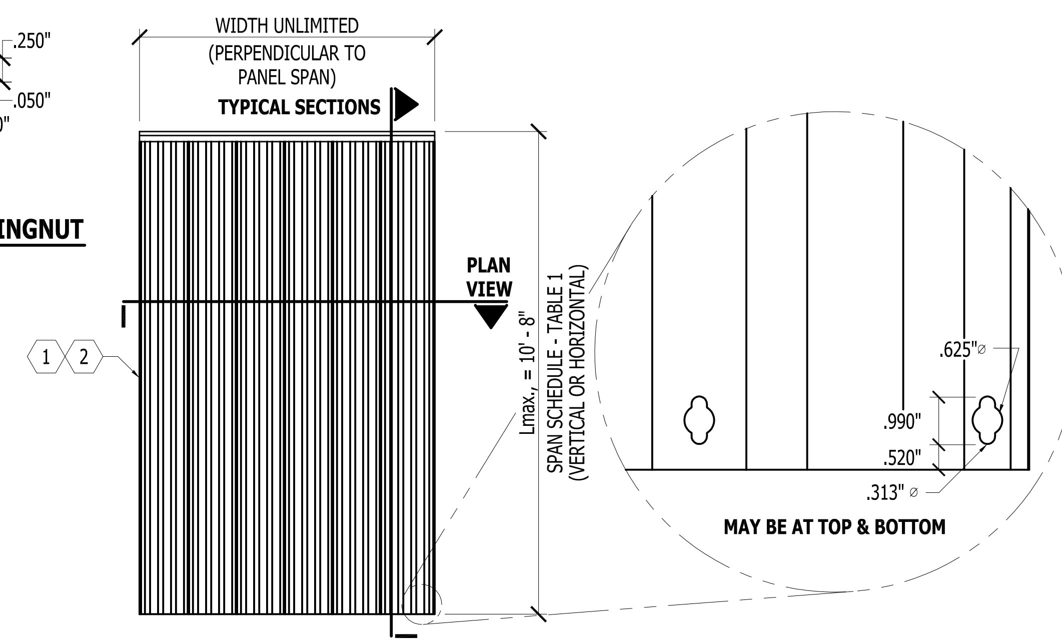

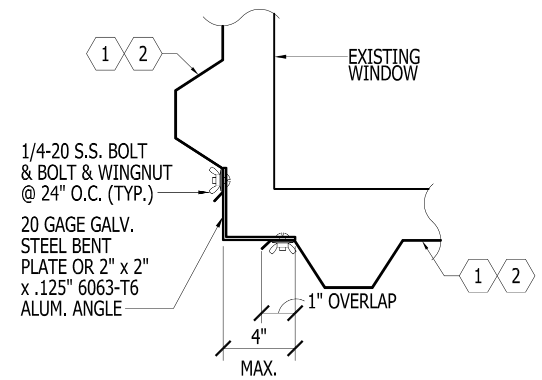

B **CORNER CLOSURE DETAIL**
SCALE: 1-1/2" = 1' - 0"

A **PANEL ELEVATION**
SCALE: 1/4" = 1' - 0"

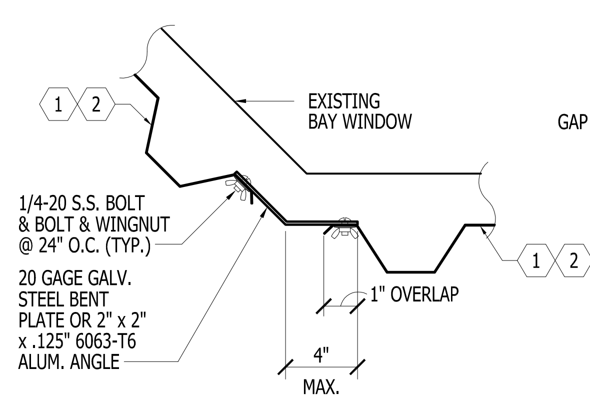

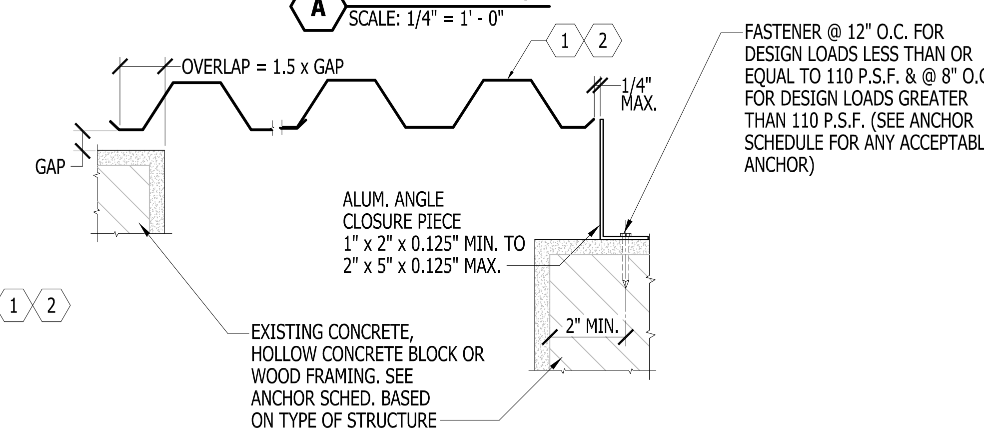

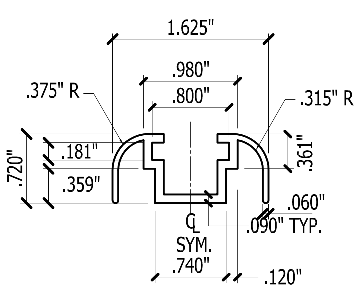

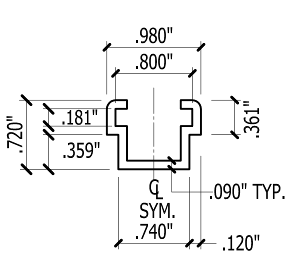

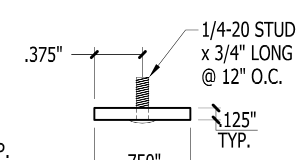

12 **DECORATIVE C-TRACK**
SCALE : HALF SIZE

13 **C-TRACK**
SCALE : HALF SIZE

14 **STUDDED STRAP (SLIDER)**
SCALE : HALF SIZE

C **CORNER CLOSURE DETAIL**
SCALE: 1-1/2" = 1' - 0"

D **BUILD-OUT MOUNT CLOSURE DETAIL**
SCALE: 1-1/2" = 1' - 0"

KNEZEVICH ASSOCIATES

Texas Registered Engineering Firm No. 11225
2590 S.W. 105th Terrace * Davie, Florida 33324
T (954) 821-6933 * www.Knezevich-Associates.com
email: VJ@Knezevich-Associates.com

Copyright © 2011 VJKnezevich & Associates, LLC d/b/a Knezevich Associates

0.050" ALUMINUM STORM PANEL

Cat 5 Hurricane Products, LLC
6216 28th Street East
Bradenton, FL 34203
T: (941) 752-4692

revisions

no	date	by	description
1	07/18/2011	VJK	TABLES 1A, 1B & 2

V.J. Knezevich
Professional Engineer
Texas License No.: PE 102903

JUL 18 2011

drawn by: ARV
scale: AS NOTED
date: 03/28/2011

drawing no.
11-100
sheet 1 of 7

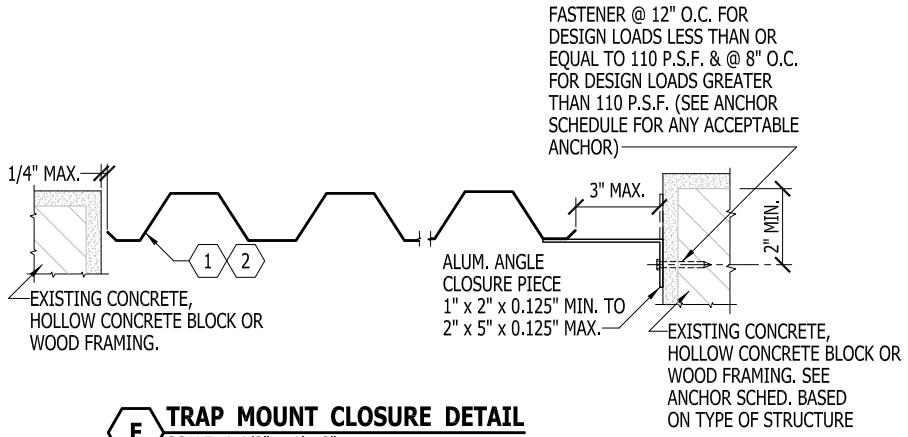

E TRAP MOUNT CLOSURE DETAIL
SCALE: 1-1/2" = 1' - 0"

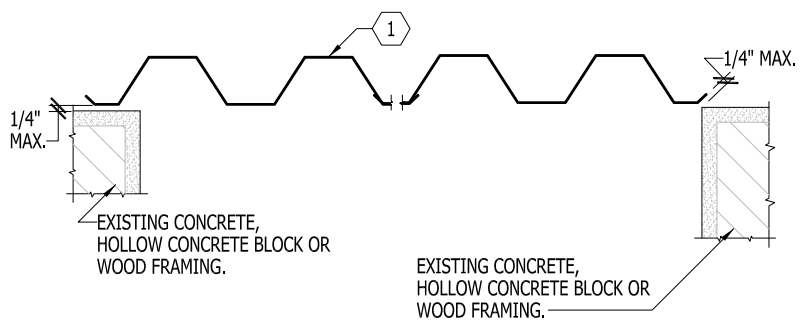

F WALL MOUNT CLOSURE DETAIL
SCALE: 1-1/2" = 1' - 0"

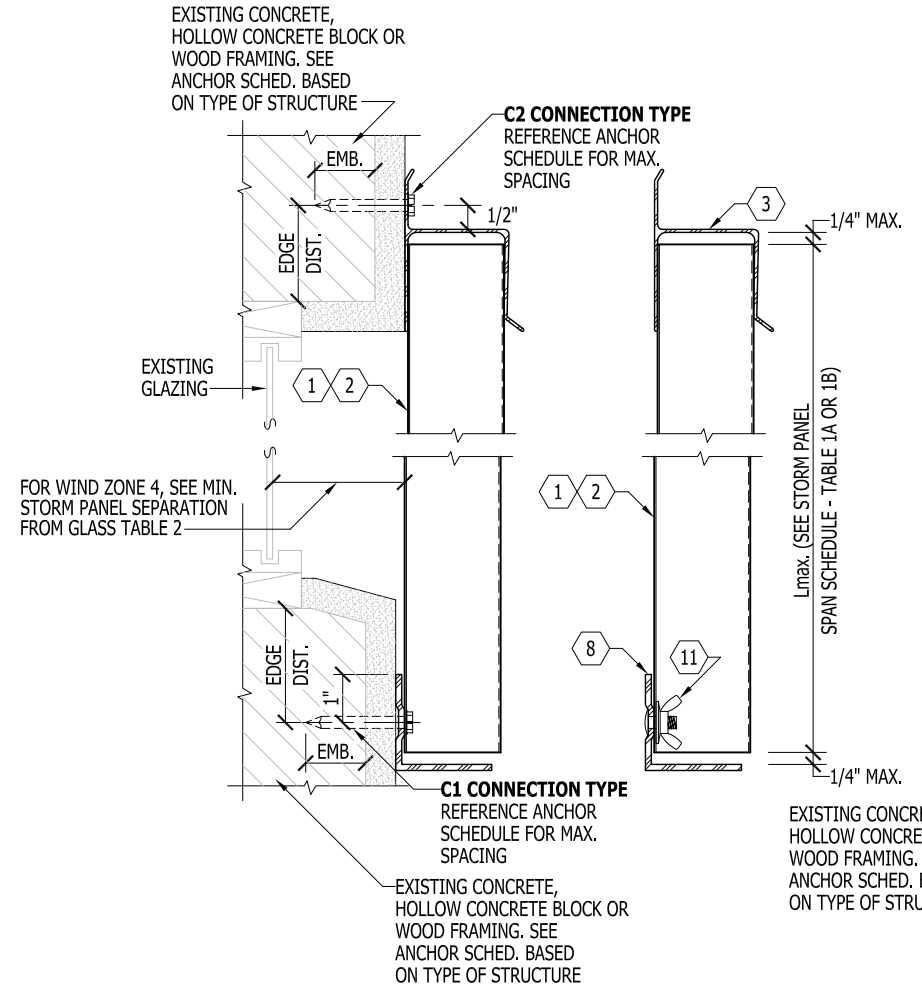

G WALL MOUNT SECTION
SCALE: 3" = 1' - 0"

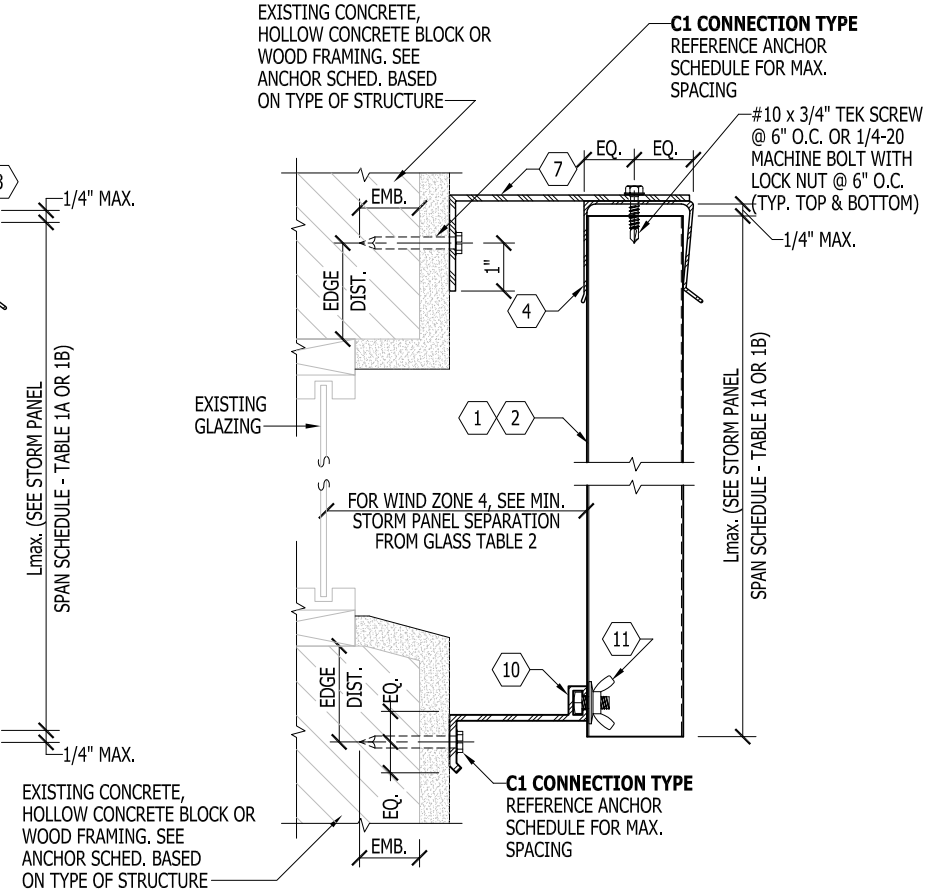

H BUILD-OUT MOUNT SECTION
SCALE: 3" = 1' - 0"

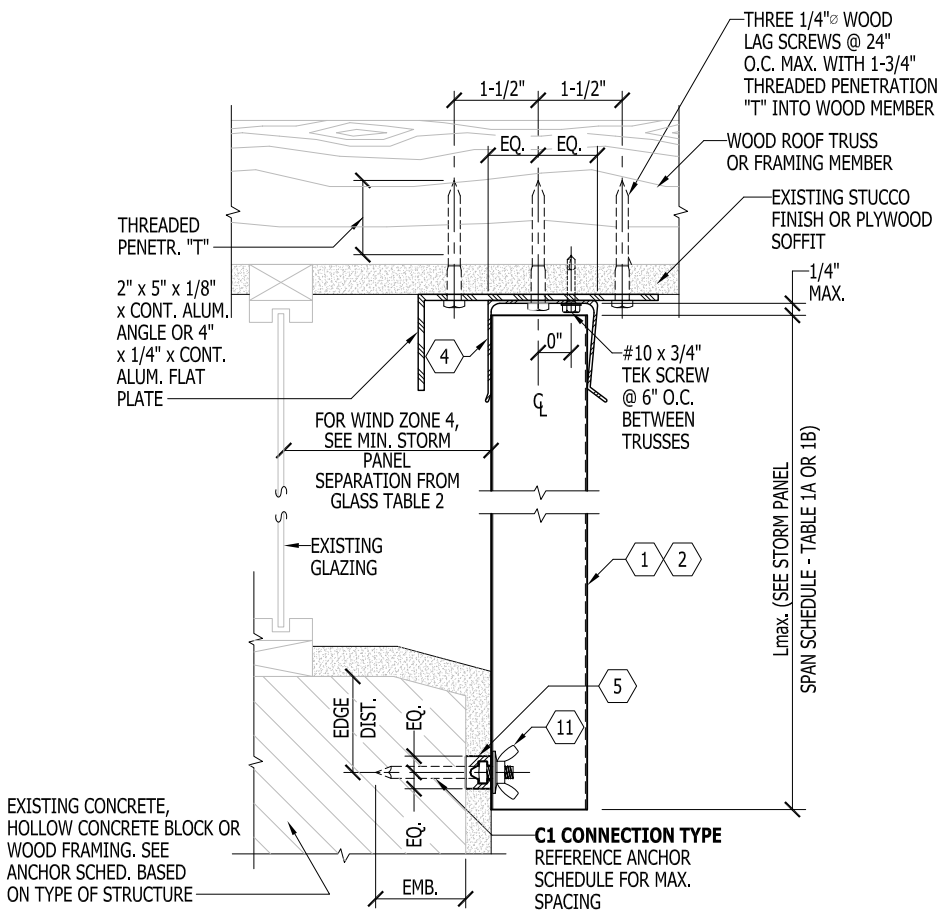

J CEILING / PRE-STUCCO TRACK
SCALE: 3" = 1' - 0"

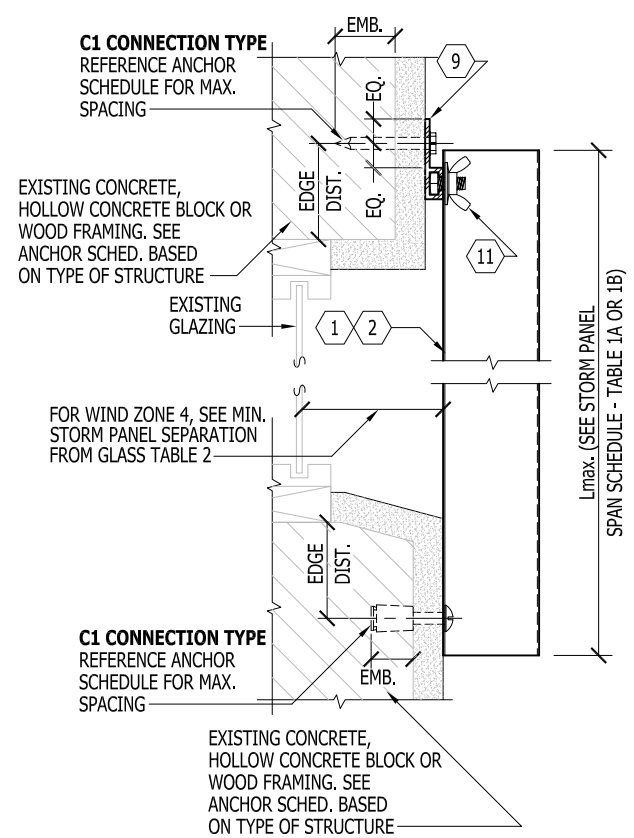

K "F" TRACK/DIRECT MOUNT SECTION
SCALE: 3" = 1' - 0"

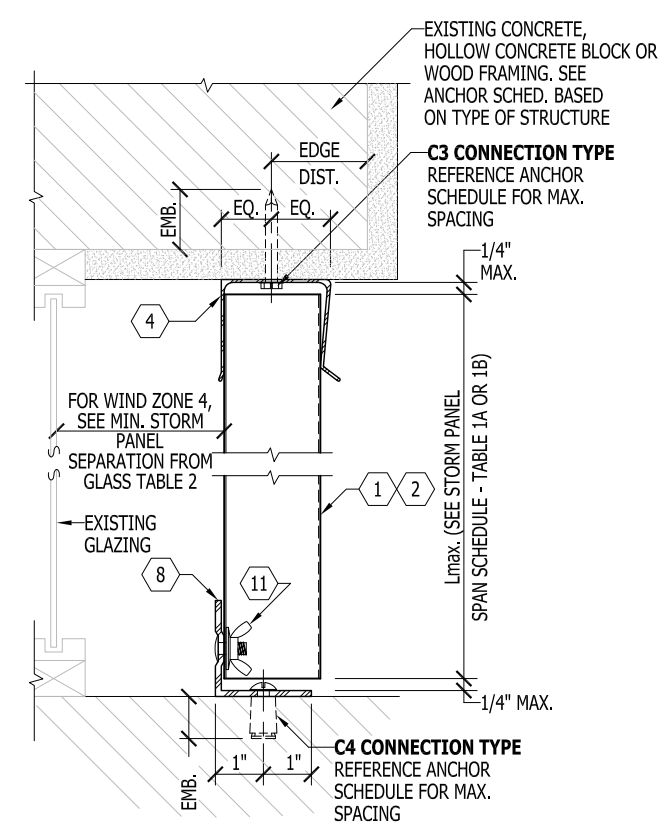

L CEILING / FLOOR MOUNT SECTION
SCALE: 3" = 1' - 0"

KNEZEVICH ASSOCIATES
Texas Registered Engineering Firm No. 11225
2590 S.W. 105th Terrace * Davie, Florida 33324
T (954) 821-6933 * www.Knezevich-Associates.com
email: VJ@Knezevich-Associates.com

Copyright © 2011 VJKnezevich & Associates, LLC d/b/a Knezevich Associates

0.050" ALUMINUM STORM PANEL

Cat 5 Hurricane Products, LLC
6216 28th Street East
Bradenton, FL 34203
T: (941) 752-4692

revisions			
no.	date	by	description
1	7/18/2011	VJK	TABLES 1A, 1B & 2

V.J. Knezevich
Professional Engineer
Texas License No.: PE 102308

JUL 18 2011

scale	AS NOTED
date	05/28/2011
drawing no.	11-100

sheet 2 of 7

DETAIL M ("PASS THRU" SEC.) ANCHOR SCHEDULE		
1/4"⌀ ITW TAPCON W/ 1-3/4" MIN. EMBEDMENT		1/4"⌀ WOOD LAG SCREW W/ MINIMUM 1-3/4" PENETRATION SHEAR PARALLEL OR PERPENDICULAR TO WOOD GRAIN
CONC.	**BLOCK**	**WOOD**
12"	4"	12"

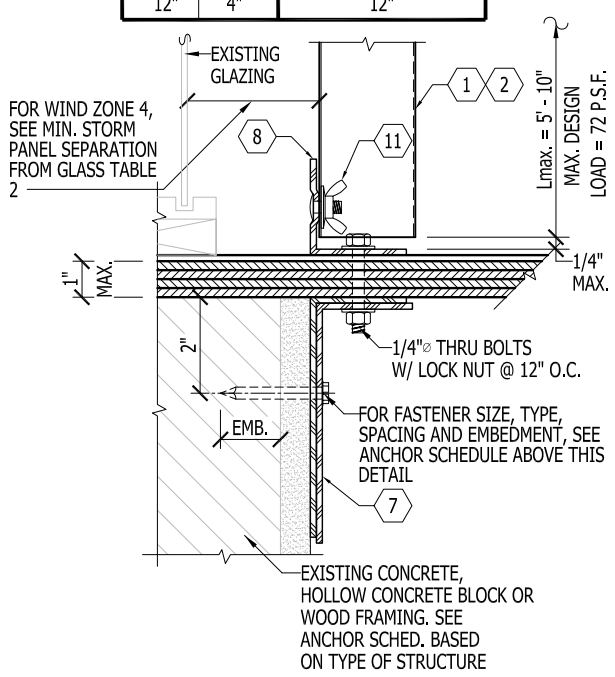

M "PASS THRU" SECTION
SCALE: 3" = 1'-0"

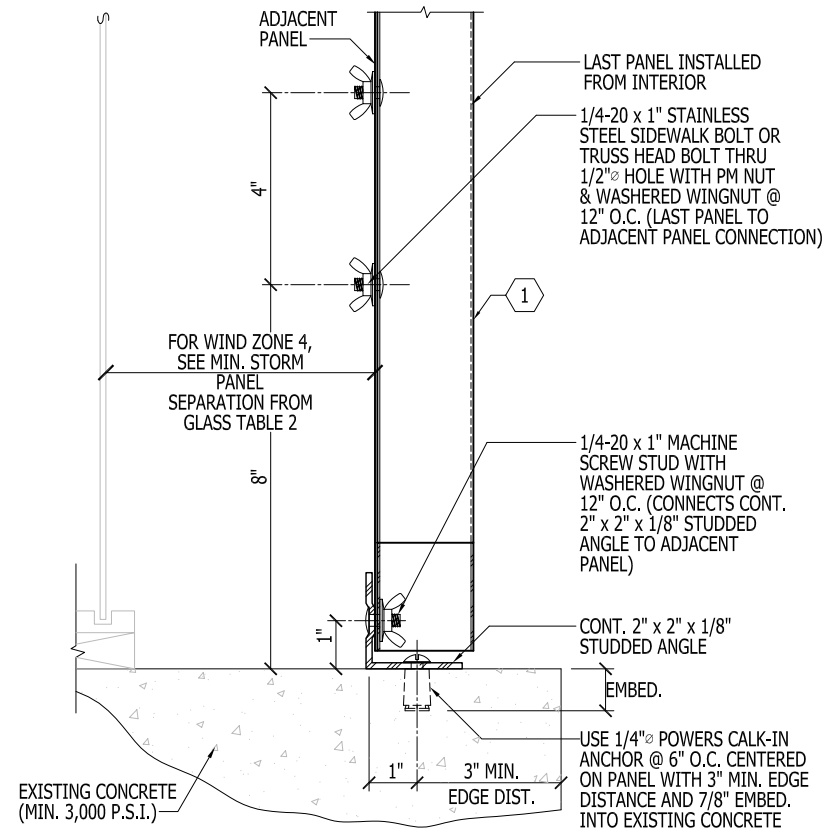

(MAX. PANEL HEIGHT = 8' - 0" AND MAX. DESIGN LOAD = ±62 P.S.F.)

N OPTIONAL INTERIOR FASTENING DETAIL
SCALE: 3" = 1'-0"

DETAIL P NOTE:

THIS DETAIL DEPICTS THE CONNECTION OF THE LAST PANEL FOR AN OPENING WITH PANELS INSTALLED FROM INSIDE. REFERENCE DETAILS G, L OR R FOR TOP AND BOTTOM MOUNTING CONDITIONS.

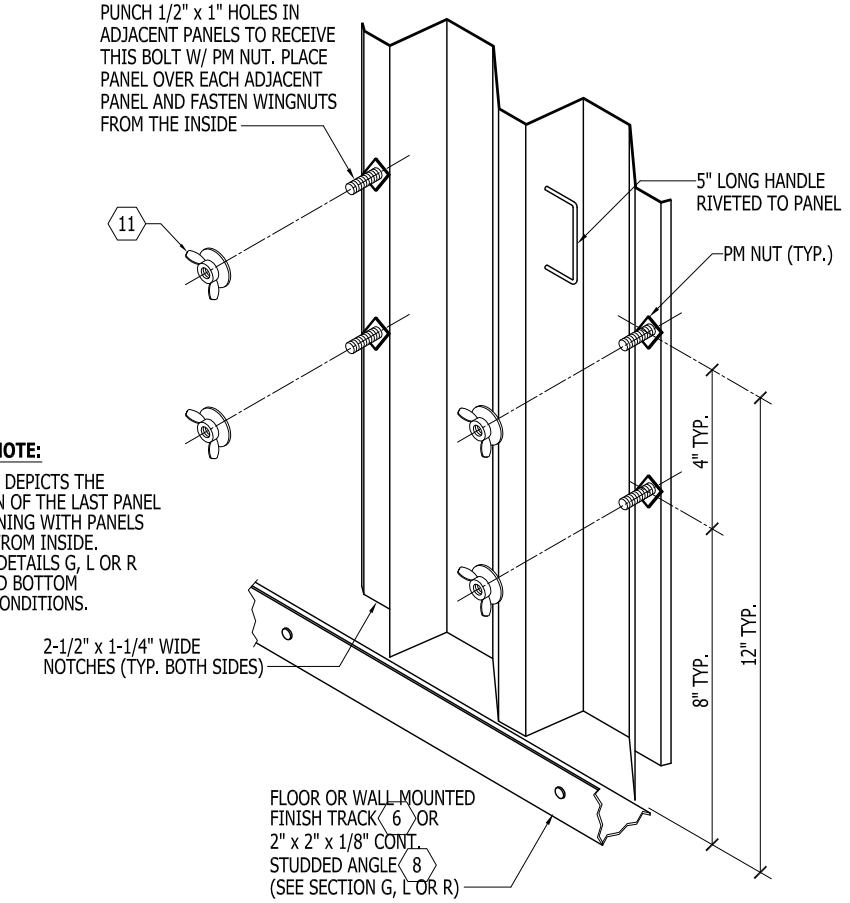

P OPTIONAL INTERIOR FASTENING DETAIL (ISOMETRIC)
N.T.S.

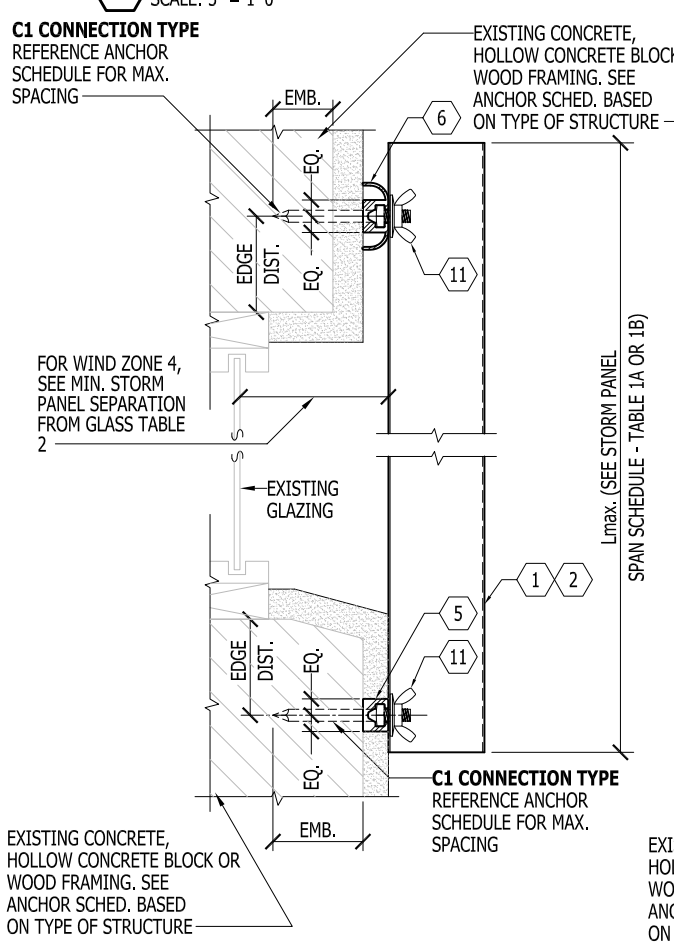

Q FINISH TRACK / PRE-STUCCO TRACK
SCALE: 3" = 1' - 0"

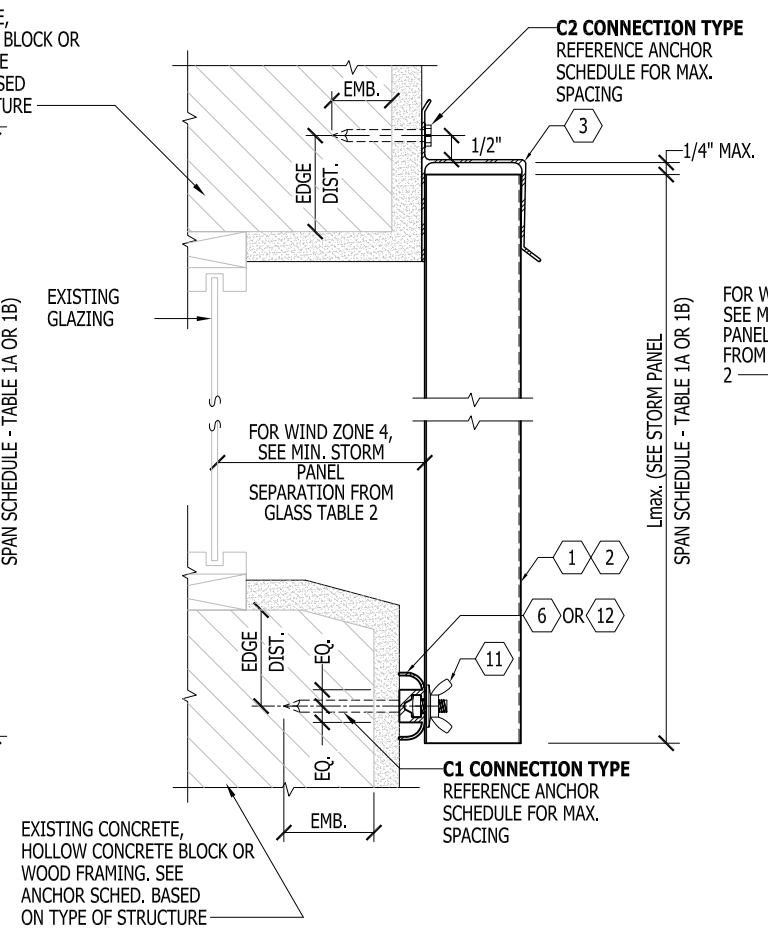

R ASSEMBLY - INSIDE CLOSURE
SCALE: 3" = 1' - 0"

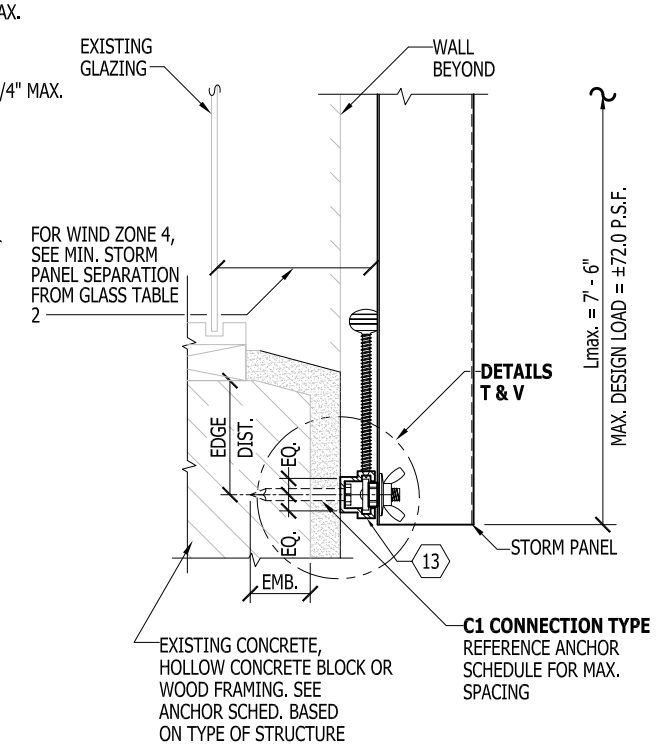

NOTE: USE OF DETAIL SHALL BE IN CONJUNCTION WITH AN " h " HEADER OR " U " HEADER TOP MOUNT

S C-TRACK / 3/4" STRAP ASSEMBLY - INSIDE MOUNT
SCALE: 3" = 1' - 0"

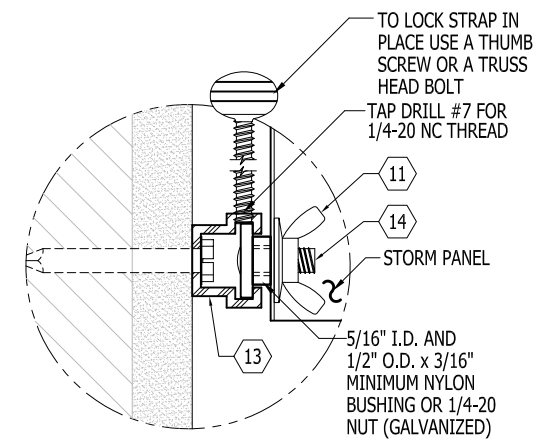

T C-TRACK / 3/4" STRAP ASSEMBLY (BLOW UP)
SCALE: HALF SIZE

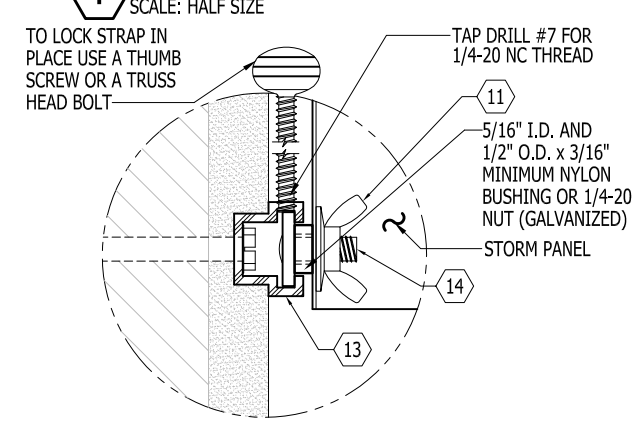

V C-TRACK / 3/4" STRAP ASSEMBLY (BLOW UP)
SCALE: HALF SIZE

KNEZEVICH ASSOCIATES
Texas Registered Engineering Firm No. 11225
2590 S.W. 105th Terrace * Davie, Florida 33324
T (954) 821-6933 * www.Knezevich-Associates.com
email: VJ@Knezevich-Associates.com

Copyright © 2011 VJKnezevich & Associates, LLC d/b/a Knezevich Associates

0.050" ALUMINUM STORM PANEL

Cat 5 Hurricane Products, LLC
6216 28th Street East
Bradenton, FL 34203
T: (941) 752-4692

revisions			
no.	date	by	description
1	07/18/2011	VJK	TABLES 1A, 1B & 2

V.J. Knezevich
Professional Engineer
Texas License No.: PE 102908

JUL 18 2011

SCALE: AS NOTED
DATE: 07/28/2011
drawing no.
11-100
sheet 3 of 7

ANCHOR SCHEDULE FOR CONCRETE

MAXIMUM FASTENER SPACING (INCHES) REQUIRED FOR VARIOUS DESIGN LOADS AND SPANS

ANCHOR TYPE & MINIMUM CONCRETE REQUIREMENTS	LOAD (W) P.S.F. MAX. (SEE NOTE 1)	MIN. 1" EDGE DISTANCE															MIN. 2-1/2" EDGE DISTANCE														
		SPANS UP TO 5'-0" (SEE NOTE 1)					SPANS UP TO 8'-5" (SEE NOTE 1)					SPANS UP TO 10'-8" (SEE NOTE 1)					SPANS UP TO 5'-0" (SEE NOTE 1)					SPANS UP TO 8'-5" (SEE NOTE 1)					SPANS UP TO 10'-8" (SEE NOTE 1)				
		CONNECTION TYPE (SEE NOTE 3)					CONNECTION TYPE (SEE NOTE 3)					CONNECTION TYPE (SEE NOTE 3)					CONNECTION TYPE (SEE NOTE 3)					CONNECTION TYPE (SEE NOTE 3)					CONNECTION TYPE (SEE NOTE 3)				
		C1	C2	C3	C4	C5	C1	C2	C3	C4	C5	C1	C2	C3	C4	C5	C1	C2	C3	C4	C5	C1	C2	C3	C4	C5	C1	C2	C3	C4	C5
1/4"⌀ ELCO ULTRACON WITH 1-3/4" MIN. EMBEDMENT (MIN. 2,700 P.S.I. CONCRETE)	52.0	12	12	12	12		12	12	8	8		12	12	6	6		12	12	12	12		12	12	12	12		12	12	11	9	
	64.0	12	12	12	11		12	12	7	6		12	9	5	5		12	12	12	12		12	12	11	10		12	9	9	8	
	72.0	12	12	10	10		12	11	6	5		12	9	5	5		12	12	12	12		12	12	10	9		12	9	9	8	
	92.0	12	12	8	7		12	9	5	5		12	9	5	5		12	12	12	11		12	9	9	8		12	9	9	8	
	150.0	12	9	5	5		12	9	5	5		12	9	5	5		12	9	9	8		12	9	9	8		12	9	9	8	
3/16"⌀ ELCO ULTRACON WITH 1-3/4" MIN. EMBEDMENT (MIN. 2,700 P.S.I. CONCRETE)	52.0	12	12	12	12		12	12	10	9		11	9	8	7		12	12	12	12		12	12	11	10		12	10	9	7	
	64.0	12	12	12	12		12	10	8	7		9	5	6	6		12	12	12	12		12	12	9	8		11	6	7	6	
	72.0	12	12	12	11		10	6	7	6		9	5	6	6		12	12	12	12		12	8	8	7		11	6	7	6	
	92.0	12	12	10	8		9	5	6	6		9	5	6	6		12	12	10	9		11	6	7	6		11	6	7	6	
	150.0	9	5	6	6		9	5	6	6		9	5	6	6		11	6	7	6		11	6	7	6		11	6	7	6	
* 1/4"⌀ ELCO MALE "PANELMATE" WITH 2" MIN. EMBEDMENT & 1/4-20 MACHINE SCREW WITH NUT (MIN. 3,350 P.S.I. CONCRETE)	52.0	12	12	12	12		12	12	8	7		12	12	6	6		12	12	12	12		12	12	12	12		12	12	12	12	
	64.0	12	12	11	10		12	12	6	6		12	12	5	5		12	12	12	12		12	12	12	12		12	12	11	10	
	72.0	12	12	10	9		12	12	5	5		12	12	5	5		12	12	12	12		12	12	12	11		12	12	11	10	
	92.0	12	12	7	7		12	12	5	5		12	12	5	5		12	12	12	12		12	12	11	10		12	12	11	10	
	150.0	12	12	5	5		12	12	5	5		12	12	5	5		12	12	11	10		12	12	11	10		12	12	11	10	
* 1/4"⌀ ELCO FEMALE "PANELMATE" WITH 1-3/4" MIN. EMBEDMENT & 1/4-20 MACHINE SCREW WITH NUT (MIN. 3,350 P.S.I. CONCRETE)	52.0																12	12	12	12		12	12	12	12		12	12	10	9	
	64.0																12	12	12	12		12	12	11	10		12	10	9	8	
	72.0																12	12	12	12		12	12	9	9		12	10	9	8	
	92.0																12	12	12	12		12	10	9	8		12	10	9	8	
	150.0																12	10	9	8		12	10	9	8		12	10	9	8	
1/4"⌀ ELCO CRETE FLEX SS4 WITH 1-3/4" MIN. EMBEDMENT (MIN. 3,350 P.S.I. CONCRETE)	52.0																12	12	12	12		12	12	12	12		12	12	12	12	
	64.0																12	12	12	12		12	12	12	12		12	12	12	11	
	72.0																12	12	12	12		12	12	12	12		12	12	12	11	
	92.0																12	12	12	12		12	12	12	11		12	12	12	11	
	150.0																12	12	12	11		12	12	12	11		12	12	12	11	

ANCHOR SCHEDULE FOR CONCRETE

MAXIMUM FASTENER SPACING (INCHES) REQUIRED FOR VARIOUS DESIGN LOADS AND SPANS

ANCHOR TYPE & MINIMUM CONCRETE REQUIREMENTS	LOAD (W) P.S.F. MAX. (SEE NOTE 1)	MIN. 2" EDGE DISTANCE															MIN. 3" EDGE DISTANCE														
		SPANS UP TO 5'-0" (SEE NOTE 1)					SPANS UP TO 8'-5" (SEE NOTE 1)					SPANS UP TO 10'-8" (SEE NOTE 1)					SPANS UP TO 5'-0" (SEE NOTE 1)					SPANS UP TO 8'-5" (SEE NOTE 1)					SPANS UP TO 10'-8" (SEE NOTE 1)				
		CONNECTION TYPE (SEE NOTE 3)					CONNECTION TYPE (SEE NOTE 3)					CONNECTION TYPE (SEE NOTE 3)					CONNECTION TYPE (SEE NOTE 3)					CONNECTION TYPE (SEE NOTE 3)					CONNECTION TYPE (SEE NOTE 3)				
		C1	C2	C3	C4	C5	C1	C2	C3	C4	C5	C1	C2	C3	C4	C5	C1	C2	C3	C4	C5	C1	C2	C3	C4	C5	C1	C2	C3	C4	C5
* 1/4"⌀ ALL POINTS SOLID SET ANCHOR WITH 7/8" EMBEDMENT & 1/4-20 STAINLESS STEEL MACHINE SCREW (SEE ANCHOR NOTE 14) (MIN. 3,000 P.S.I. CONCRETE)	52.0	12	12	12	12		12	12	12	11		12	12	10	9		12	12	12	12		12	12	12	12		12	12	12	11	
	64.0	12	12	12	12		12	12	10	9		12	8	8	7		12	12	12	12		12	12	12	12		12	10	11	10	
	72.0	12	12	12	12		12	11	9	8		12	8	8	7		12	12	12	12		12	12	12	10		12	10	11	10	
	92.0	12	12	12	11		12	8	8	7		12	8	8	7		12	12	12	12		12	10	11	10		12	10	11	10	
	150.0	12	8	8	7		12	8	8	7		12	8	8	7		12	10	11	10		12	10	11	10		12	10	11	10	

ANCHOR SCHEDULE FOR WOOD

MAXIMUM FASTENER SPACING (INCHES) REQUIRED FOR VARIOUS DESIGN LOADS AND SPANS

ANCHOR TYPE & MINIMUM CONCRETE REQUIREMENTS	LOAD (W) P.S.F. MAX. (SEE NOTE 1)	MIN. 3/4" EDGE DISTANCE														
		SPANS UP TO 5'-0" (SEE NOTE 1)					SPANS UP TO 8'-5" (SEE NOTE 1)					SPANS UP TO 10'-8" (SEE NOTE 1)				
		CONNECTION TYPE (SEE NOTE 3)					CONNECTION TYPE (SEE NOTE 3)					CONNECTION TYPE (SEE NOTE 3)				
		C1	C2	C3	C4	C5	C1	C2	C3	C4	C5	C1	C2	C3	C4	C5
1/4"⌀ WOOD LAG WITH 1-27/32" MIN. THREAD PENETRATION SHEAR PARALLEL OR PERP. TO WOOD GRAIN G=0.55 MAX.	52.0	12	12	12	12		12	12	10	9		12	12	8	7	
	64.0	12	12	12	12		12	12	8	8		12	12	6	6	
	72.0	12	12	12	12		12	12	7	7		12	12	6	6	
	92.0	12	12	9	9		12	12	6	6		12	12	6	6	
	150.0	12	12	6	6		12	12	6	6		12	12	6	6	
1/4"⌀ WOOD LAG WITH 1-27/32" MIN. THREAD PENETRATION SHEAR PARALLEL OR PERP. TO WOOD GRAIN G=0.42 MAX.	52.0	12	12	12	12		12	12	8	8		12	12	6	6	
	64.0	12	12	11	11		12	12	6	6		12	10	5	5	
	72.0	12	12	10	9		12	12	6	5		12	10	5	5	
	92.0	12	12	8	7		12	10	5	5		12	10	5	5	
	150.0	12	10	5	5		12	10	5	5		12	10	5	5	
#10G WOOD SCREW WITH MIN. 1-11/32" PENETRATION SHEAR PARALLEL OR PERPENDICULAR TO WOOD GRAIN G=0.42 MAX.	52.0	12	12	7	6		12	12	4	4		11	9	3	3	
	64.0	12	12	5	5		11	10	3	3		9	5			
	72.0	12	12	5	4		10	6	3			9	5			
	92.0	12	12	4	3		9	5				9	5			
	150.0	9	5				9	5				9	5			
* * 1/4"⌀ ELCO MALE/FEMALE "PANELMATE" WITH 2" MIN. EMBEDMENT & 1/4-20 MACHINE SCREW WITH NUT G=0.54 MAX.	52.0	12	12	12	12		12	12	11	10		12	12	9	8	
	64.0	12	12	12	12		12	12	9	8		12	12	7	7	
	72.0	12	12	12	12		12	12	8	7		12	12	7	7	
	92.0	12	12	11	10		12	12	7	7		12	12	7	7	
	150.0	12	12	7	7		12	12	7	7		12	12	7	7	

ANCHOR NOTES:

1. SEE ANCHOR NOTES ON PAGE 5 OF 7.

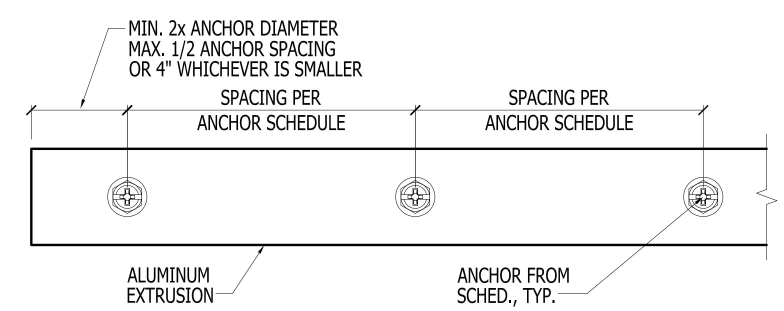

KNEZEVICH ASSOCIATES
Texas Registered Engineering Firm No. 11225
2590 S.W. 105th Terrace * Davie, Florida 33324
T (954) 821-6933 * www.Knezevich-Associates.com
email: VJ@Knezevich-Associates.com

Copyright © 2011 VJKnezevich & Associates, LLC d/b/a Knezevich Associates

0.050" ALUMINUM STORM PANEL

Cat 5 Hurricane Products, LLC
6216 28th Street East
Bradenton, FL 34203
T: (941) 752-4692

revisions			
no	date	by	description
1	07/18/2011	VJK	TABLES 1A, 1B & 2

V.J. Knezevich
Professional Engineer
Texas License No.: PE 102903

drawn by: ARV
scale: AS NOTED
date: 03/28/2011
drawing no. **11-100**

C:_MiDi_Projects\MiDisparate_CAD\VJKnezevich\CAD2011\Cat5_Hurricane\11-100\R1-sub\11-100-04.dwg, 7/27/2011 10:27:22 PM, Tabloid, 1:1, www.MiDisparate.com

ANCHOR SCHEDULE FOR CONCRETE

MAXIMUM FASTENER SPACING (INCHES) REQUIRED FOR VARIOUS DESIGN LOADS AND SPANS

MIN. 1-1/4" EDGE DISTANCE

ANCHOR TYPE & MINIMUM CONCRETE REQUIREMENTS	LOAD (W) P.S.F. MAX. (SEE NOTE 1)	SPANS UP TO 5'-0" (SEE NOTE 1) CONNECTION TYPE (SEE NOTE 3) C1	C2	C3	C4	C5	SPANS UP TO 8'-5" (SEE NOTE 1) CONNECTION TYPE (SEE NOTE 3) C1	C2	C3	C4	C5	SPANS UP TO 10'-8" (SEE NOTE 1) CONNECTION TYPE (SEE NOTE 3) C1	C2	C3	C4	C5
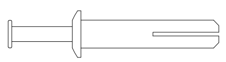 1/4"⌀ POWERS ZAMAC NAILIN WITH 1-1/4" MIN. EMBEDMENT (SEE ANCHOR NOTE 14) (MIN. 3,000 P.S.I. CONCRETE)	52.0	12	12	6	5		9	9	3	3		7	5	3		
	64.0	12	12	5	4		7	6	3			6	3			
	72.0	11	11	4	4		6	4				6	3			
	92.0	8	8	3	3		6	3				6	3			
	150.0	6	3				6	3				6	3			

MIN. 3" EDGE DISTANCE

ANCHOR TYPE & MINIMUM CONCRETE REQUIREMENTS	LOAD (W) P.S.F. MAX. (SEE NOTE 1)	SPANS UP TO 5'-0" (SEE NOTE 1) CONNECTION TYPE (SEE NOTE 3) C1	C2	C3	C4	C5	SPANS UP TO 8'-5" (SEE NOTE 1) CONNECTION TYPE (SEE NOTE 3) C1	C2	C3	C4	C5	SPANS UP TO 10'-8" (SEE NOTE 1) CONNECTION TYPE (SEE NOTE 3) C1	C2	C3	C4	C5
1/4"⌀ POWERS ZAMAC NAILIN WITH 1-1/4" MIN. EMBEDMENT (SEE ANCHOR NOTE 14) (MIN. 3,000 P.S.I. CONCRETE)	52.0	12	12	10	9		11	11	6	5		9	7	5	4	
	64.0	12	12	8	7		9	8	5	4		7	4	4	3	
	72.0	12	12	7	7		8	5	4	4		7	4	4	3	
	92.0	10	10	6	5		7	4	4	3		7	4	4	3	
	150.0	7	4	4	3		7	4	4	3		7	4	4	3	

ANCHOR SCHEDULE FOR CONCRETE

MAXIMUM FASTENER SPACING (INCHES) REQUIRED FOR VARIOUS DESIGN LOADS AND SPANS

MIN. 1-3/4" EDGE DISTANCE

ANCHOR TYPE & MINIMUM CONCRETE REQUIREMENTS	LOAD (W) P.S.F. MAX. (SEE NOTE 1)	SPANS UP TO 5'-0" (SEE NOTE 1) CONNECTION TYPE (SEE NOTE 3) C1	C2	C3	C4	C5	SPANS UP TO 8'-5" (SEE NOTE 1) CONNECTION TYPE (SEE NOTE 3) C1	C2	C3	C4	C5	SPANS UP TO 10'-8" (SEE NOTE 1) CONNECTION TYPE (SEE NOTE 3) C1	C2	C3	C4	C5
* 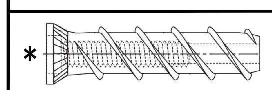 1/2"⌀ FEMALE ELCO PANELMATE INSERT WITH 1-5/8" EMBEDMENT & 1/4-20 STAINLESS STEEL MACHINE SCREW (MIN. 2,700 P.S.I. CONCRETE)	52.0	12	12	12	12		12	12	9	8		12	11	7	6	
	64.0	12	12	12	11		12	12	7	6		12	6	6	5	
	72.0	12	12	11	10		12	8	6	6		12	6	6	5	
	92.0	12	12	8	7		12	6	6	5		12	6	6	5	
	150.0	12	6	6	5		12	6	6	5		12	6	6	5	

MIN. 4" EDGE DISTANCE

ANCHOR TYPE & MINIMUM CONCRETE REQUIREMENTS	LOAD (W) P.S.F. MAX. (SEE NOTE 1)	SPANS UP TO 5'-0" (SEE NOTE 1) CONNECTION TYPE (SEE NOTE 3) C1	C2	C3	C4	C5	SPANS UP TO 8'-5" (SEE NOTE 1) CONNECTION TYPE (SEE NOTE 3) C1	C2	C3	C4	C5	SPANS UP TO 10'-8" (SEE NOTE 1) CONNECTION TYPE (SEE NOTE 3) C1	C2	C3	C4	C5
* 1/2"⌀ FEMALE ELCO PANELMATE INSERT WITH 1-5/8" EMBEDMENT & 1/4-20 STAINLESS STEEL MACHINE SCREW (MIN. 2,700 P.S.I. CONCRETE)	52.0	12	12	12	12		12	12	12	12		12	12	12	12	
	64.0	12	12	12	12		12	12	12	12		12	11	11	10	
	72.0	12	12	12	12		12	12	12	11		12	11	11	10	
	92.0	12	12	12	12		12	11	11	10		12	11	11	10	
	150.0	12	11	11	10		12	11	11	10		12	11	11	10	

ANCHOR SCHEDULE FOR HOLLOW CONCRETE BLOCK

MAXIMUM FASTENER SPACING (INCHES) REQUIRED FOR VARIOUS DESIGN LOADS AND SPANS

(MIN. 2,899 P.S.I. CONCRETE)

MIN. 1" EDGE DISTANCE

ANCHOR TYPE & MINIMUM CONCRETE REQUIREMENTS	LOAD (W) P.S.F. MAX. (SEE NOTE 1)	SPANS UP TO 5'-0" (SEE NOTE 1) CONNECTION TYPE (SEE NOTE 3) C1	C2	C3	C4	C5	SPANS UP TO 8'-5" (SEE NOTE 1) CONNECTION TYPE (SEE NOTE 3) C1	C2	C3	C4	C5	SPANS UP TO 10'-8" (SEE NOTE 1) CONNECTION TYPE (SEE NOTE 3) C1	C2	C3	C4	C5
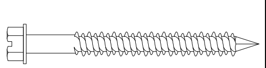 1/4"⌀ ELCO ULTRACON WITH 1-1/4" MIN. EMBEDMENT	52.0	12	12	9	8		9	9	5	4		7	6	4	3	
	64.0	12	12	7	6		7	6	4	3		6	3	3	3	
	72.0	11	11	6	5		6	4	3	3		6	3	3	3	
	92.0	9	9	5	4		6	3	3	3		6	3	3	3	
	150.0	6	3	3	3		6	3	3	3		6	3	3	3	
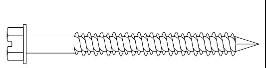 3/16"⌀ ELCO ULTRACON WITH 1-1/4" MIN. EMBEDMENT	52.0	9	9	6	5		5	5	3	3		4	3			
	64.0	7	7	4	4		4	4				3				
	72.0	7	7	4	3		4					3				
	92.0	5	5	3	3		3					3				
	150.0	3					3					3				
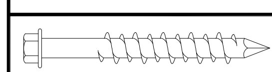 1/4"⌀ ELCO CRETE FLEX SS4 WITH 1-1/4" MIN. EMBEDMENT	52.0	12	12	6	6		10	10	4	3		8	6	3		
	64.0	12	12	5	5		8	7	3	3		7	3			
	72.0	12	12	4	4		7	5				7	3			
	92.0	10	10	3	3		7	3				7	3			
	150.0	7	3				7	3				7	3			

MIN. 2-1/2" EDGE DISTANCE

ANCHOR TYPE & MINIMUM CONCRETE REQUIREMENTS	LOAD (W) P.S.F. MAX. (SEE NOTE 1)	SPANS UP TO 5'-0" (SEE NOTE 1) CONNECTION TYPE (SEE NOTE 3) C1	C2	C3	C4	C5	SPANS UP TO 8'-5" (SEE NOTE 1) CONNECTION TYPE (SEE NOTE 3) C1	C2	C3	C4	C5	SPANS UP TO 10'-8" (SEE NOTE 1) CONNECTION TYPE (SEE NOTE 3) C1	C2	C3	C4	C5
1/4"⌀ ELCO ULTRACON WITH 1-1/4" MIN. EMBEDMENT	52.0	12	12	12	10		9	9	7	6		7	6	5	5	
	64.0	12	12	10	8		7	6	6	5		6	3	4	4	
	72.0	11	11	9	7		6	4	5	4		6	3	4	4	
	92.0	9	9	7	6		6	3	4	4		6	3	4	4	
	150.0	6	3	4	4		6	3	4	4		6	3	4	4	
3/16"⌀ ELCO ULTRACON WITH 1-1/4" MIN. EMBEDMENT	52.0	9	9	6	5		5	5	3	3		4	3			
	64.0	7	7	5	4		4	4	3			3				
	72.0	7	7	4	4		4					3				
	92.0	5	5	3	3		3					3				
	150.0	3					3					3				
1/4"⌀ ELCO CRETE FLEX SS4 WITH 1-1/4" MIN. EMBEDMENT	52.0	12	12	12	12		12	12	9	8		12	10	7	6	
	64.0	12	12	12	11		12	11	7	7		11	6	6	5	
	72.0	12	12	11	10		12	7	7	6		11	6	6	5	
	92.0	12	12	9	8		11	6	6	5		11	6	6	5	
	150.0	11	6	6	5		11	6	6	5		11	6	6	5	

ANCHOR NOTES:

1. SPANS AND LOADS SHOWN HERE ARE FOR DETERMINING ANCHOR SPACING ONLY. ALLOWABLE STORM PANEL SPANS FOR SPECIFIC LOADS MUST BE LIMITED TO THOSE SHOWN IN TABLE 1.
2. AN EFFECTIVE WIND AREA OF 10 SQ. FT. SHALL BE USED FOR DETERMINING WIND LOADS FOR ANCHORS.
3. ENTER ANCHOR SCHEDULE BASED ON THE EXISTING STRUCTURE MATERIAL, ANCHOR TYPE AND EDGE DISTANCE. SELECT DESIGN LOAD GREATER THAN OR EQUAL TO NEGATIVE DESIGN LOAD ON SHUTTER AND SELECT SPAN GREATER THAN OR EQUAL TO SHUTTER SPAN.
4. SEE MOUNTING SECTION DETAILS FOR IDENTIFICATION OF CONNECTION TYPE.
5. EXISTING STRUCTURE MAY BE CONCRETE, HOLLOW CONCRETE BLOCK OR WOOD FRAMING. REFERENCE ANCHOR SCHEDULE FOR PROPER ANCHOR TYPE BASED ON TYPE OF EXISTING STRUCTURE.
6. ANCHORS SHALL BE INSTALLED IN ACCORDANCE WITH MANUFACTURERS' RECOMMENDATIONS.
7. MINIMUM EMBEDMENT AND EDGE DISTANCE EXCLUDE WALL FINISH OR STUCCO.
8. WHERE EXISTING STRUCTURE IS POST-TENSIONED CONCRETE CONTRACTOR SHALL LOCATE CABLES PRIOR TO ANCHORING AND COORDINATE ANCHORAGE SUCH THAT CABLES ARE NOT DAMAGED.
9. WHERE EXISTING STRUCTURE IS WOOD FRAMING, WOOD FRAMING CONDITIONS VARY. FIELD VERIFY THAT FASTENERS ARE INTO ADEQUATE WOOD FRAMING MEMBERS, NOT PLYWOOD. FASTENING TO PLYWOOD IS ACCEPTABLE ONLY FOR SIDE CLOSURE PIECES.
10. WHERE LAG SCREWS FASTEN TO NARROW FACE OF STUD FRAMING, FASTENER SHALL BE LOCATED IN CENTER OF NOMINAL 2 X 4 (MIN.) WOOD STUD, 3/4" EDGE DISTANCE IS ACCEPTABLE FOR WOOD FRAMING. SEE ANCHOR SCHEDULE FOR ACCEPTABLE DENSITY G OF WOOD STUDS. LAG SCREWS SHALL HAVE PHILLIPS PAN HEAD OR HEX HEAD.
11. MACHINE SCREWS SHALL HAVE MINIMUM OF 1/2" ENGAGEMENT OF THREADS IN BASE ANCHOR AND MAY HAVE EITHER A PAN HEAD, TRUSS HEAD, OR WAFER HEAD (SIDEWALK BOLT), U.O.N.
12. (hatched box) DESIGNATES ANCHOR CONDITIONS WHICH ARE NOT ACCEPTABLE USES.
13. * DESIGNATES ANCHORS WHICH ARE REMOVABLE BY REMOVING MACHINE SCREW, NUT OR WASHERED WINGNUT.
14. THE ALL POINTS "SOLID SET" AND POWERS FASTENERS "ZAMAC NAILIN" ANCHORS MAY NOT BE USED IN CONCRETE CEIINGS OR FLOORS, EXCEPT THAT THESE ANCHORS MAY BE USED IN CONCRETE SLABS, ON GRADE.

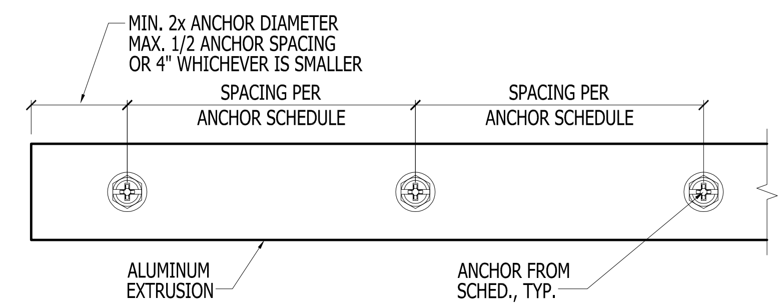

KNEZEVICH ASSOCIATES
Texas Registered Engineering Firm No. 11225
2590 S.W. 105th Terrace * Davie, Florida 33324
T (954) 821-6933 * www.Knezevich-Associates.com
email: VJ@Knezevich-Associates.com

Copyright © 2011 VJKnezevich & Associates, LLC d/b/a Knezevich Associates

0.050" ALUMINUM STORM PANEL

Cat 5 Hurricane Products, LLC
6216 28th Street East
Bradenton, FL 34203
T: (941) 752-4692

revisions

no	date	by	description
1	07/18/2011	VJK	TABLES 1A, 1B & 2

V.J. Knezevich
Professional Engineer
Texas License No.: PE 102905

JUL 18 2011

drawn by: ARV | scale: AS NOTED | date: 03/28/2011

drawing no. **11-100**

C:_MiDi_Projects\MiDisparate_CAD\VJKnezevich\CAD2011\Cat5_Hurricane\11-100\R1-sub\11-100-05.dwg, 7/27/2011 10:27:27 PM, Tabloid, 1:1, www.MiDisparate.com

ANCHOR SCHEDULE FOR HOLLOW CONCRETE BLOCK

MAXIMUM FASTENER SPACING (INCHES) REQUIRED FOR VARIOUS DESIGN LOADS AND SPANS

ANCHOR TYPE & MINIMUM CONCRETE REQUIREMENTS	LOAD (W) P.S.F. MAX. (SEE NOTE 1)	MIN. 2" EDGE DISTANCE															MIN. 3" EDGE DISTANCE														
		SPANS UP TO 5'-0" (SEE NOTE 1)					SPANS UP TO 8'-5" (SEE NOTE 1)					SPANS UP TO 10'-8" (SEE NOTE 1)					SPANS UP TO 5'-0" (SEE NOTE 1)					SPANS UP TO 8'-5" (SEE NOTE 1)					SPANS UP TO 10'-8" (SEE NOTE 1)				
		CONNECTION TYPE (SEE NOTE 3)					CONNECTION TYPE (SEE NOTE 3)					CONNECTION TYPE (SEE NOTE 3)					CONNECTION TYPE (SEE NOTE 3)					CONNECTION TYPE (SEE NOTE 3)					CONNECTION TYPE (SEE NOTE 3)				
		C1	C2	C3	C4	C5	C1	C2	C3	C4	C5	C1	C2	C3	C4	C5	C1	C2	C3	C4	C5	C1	C2	C3	C4	C5	C1	C2	C3	C4	C5
* 1/4"⌀ ELCO MALE "PANELMATE" WITH 2" MIN. EMBEDMENT & 1/4-20 MACHINE SCREW WITH NUT	52.0	12	12	12	12		12	12	8	7		11	9	6	5		12	12	12	12		12	12	8	7		11	9	7	6	
	64.0	12	12	10	9		11	10	6	5		9	5	5	4		12	12	12	10		11	10	7	6		9	5	5	5	
	72.0	12	12	9	8		10	6	5	5		9	5	5	4		12	12	10	9		10	6	6	5		9	5	5	5	
	92.0	12	12	7	6		9	5	5	4		9	5	5	4		12	12	8	7		9	5	5	5		9	5	5	5	
	150.0	9	5	5	4		9	5	5	4		9	5	5	4		9	5	5	5		9	5	5	5		9	5	5	5	
* 1/4"⌀ ELCO FEMALE "PANELMATE" WITH 1-3/4" MIN. EMBEDMENT & 1/4-20 MACHINE SCREW WITH NUT	52.0																12	12	12	11		12	12	7	7		11	9	6	5	
	64.0																12	12	10	9		11	10	6	5		9	5	5	4	
	72.0																12	12	9	8		10	6	5	5		9	5	5	4	
	92.0																12	12	7	6		9	5	5	4		9	5	5	4	
	150.0																9	5	5	4		9	5	5	4		9	5	5	4	
* 1/4"⌀ ALL POINTS SOLID SET ANCHOR WITH 7/8" EMBEDMENT & 1/4-20 STAINLESS STEEL MACHINE SCREW (SEE ANCHOR NOTE 14)	52.0	12	12	12	12		12	12	8	8		12	12	6	6		12	12	12	12		12	12	12	10		12	12	9	8	
	64.0	12	12	11	11		12	12	7	6		12	7	5	5		12	12	12	12		12	12	9	8		12	7	7	7	
	72.0	12	12	10	9		12	9	6	5		12	7	5	5		12	12	12	12		12	10	8	7		12	7	7	7	
	92.0	12	12	8	7		12	7	5	5		12	7	5	5		12	12	11	10		12	7	7	7		12	7	7	7	
	150.0	12	7	5	5		12	7	5	5		12	7	5	5		12	7	7	7		12	7	7	7		12	7	7	7	

ANCHOR SCHEDULE FOR HOLLOW CONCRETE BLOCK

MAXIMUM FASTENER SPACING (INCHES) REQUIRED FOR VARIOUS DESIGN LOADS AND SPANS

ANCHOR TYPE & MINIMUM CONCRETE REQUIREMENTS	LOAD (W) P.S.F. MAX. (SEE NOTE 1)	MIN. 1-1/4" EDGE DISTANCE															MIN. 2-1/2" EDGE DISTANCE														
		SPANS UP TO 5'-0" (SEE NOTE 1)					SPANS UP TO 8'-5" (SEE NOTE 1)					SPANS UP TO 10'-8" (SEE NOTE 1)					SPANS UP TO 5'-0" (SEE NOTE 1)					SPANS UP TO 8'-5" (SEE NOTE 1)					SPANS UP TO 10'-8" (SEE NOTE 1)				
		CONNECTION TYPE (SEE NOTE 3)					CONNECTION TYPE (SEE NOTE 3)					CONNECTION TYPE (SEE NOTE 3)					CONNECTION TYPE (SEE NOTE 3)					CONNECTION TYPE (SEE NOTE 3)					CONNECTION TYPE (SEE NOTE 3)				
		C1	C2	C3	C4	C5	C1	C2	C3	C4	C5	C1	C2	C3	C4	C5	C1	C2	C3	C4	C5	C1	C2	C3	C4	C5	C1	C2	C3	C4	C5
1/4"⌀ POWERS ZAMAC NAILIN WITH 1-1/4" MIN. EMBEDMENT (SEE ANCHOR NOTE 14)	52.0	12	12	7	6		10	10	4	4		8	6	3	3		12	12	12	11		12	12	7	6		10	8	5	5	
	64.0	12	12	6	5		8	7	3	3		7	3				12	12	10	9		11	9	6	5		8	4	4	4	
	72.0	12	12	5	5		7	5	3			7	3				12	12	9	8		9	6	5	4		8	4	4	4	
	92.0	10	10	4	3		7	3				7	3				12	12	7	6		8	4	4	4		8	4	4	4	
	150.0	7	3				7	3				7	3				8	4	4	4		8	4	4	4		8	4	4	4	

ANCHOR SCHEDULE FOR HOLLOW CONCRETE BLOCK

MAXIMUM FASTENER SPACING (INCHES) REQUIRED FOR VARIOUS DESIGN LOADS AND SPANS

ANCHOR TYPE & MINIMUM CONCRETE REQUIREMENTS	LOAD (W) P.S.F. MAX. (SEE NOTE 1)	MIN. 1-3/4" EDGE DISTANCE															MIN. 3-1/2" EDGE DISTANCE														
		SPANS UP TO 5'-0" (SEE NOTE 1)					SPANS UP TO 8'-5" (SEE NOTE 1)					SPANS UP TO 10'-8" (SEE NOTE 1)					SPANS UP TO 5'-0" (SEE NOTE 1)					SPANS UP TO 8'-5" (SEE NOTE 1)					SPANS UP TO 10'-8" (SEE NOTE 1)				
		CONNECTION TYPE (SEE NOTE 3)					CONNECTION TYPE (SEE NOTE 3)					CONNECTION TYPE (SEE NOTE 3)					CONNECTION TYPE (SEE NOTE 3)					CONNECTION TYPE (SEE NOTE 3)					CONNECTION TYPE (SEE NOTE 3)				
		C1	C2	C3	C4	C5	C1	C2	C3	C4	C5	C1	C2	C3	C4	C5	C1	C2	C3	C4	C5	C1	C2	C3	C4	C5	C1	C2	C3	C4	C5
* 1/2"⌀ FEMALE ELCO PANELMATE INSERT WITH 1-1/4" EMBEDMENT & 1/4-20 STAINLESS STEEL MACHINE SCREW	52.0	12	12	12	12		12	12	9	8		12	11	7	6		12	12	12	12		12	12	12	12		12	12	11	10	
	64.0	12	12	12	11		12	12	7	6		12	6	6	5		12	12	12	12		12	12	11	10		12	8	9	8	
	72.0	12	12	11	10		12	8	6	6		12	6	6	5		12	12	12	12		12	10	10	9		12	8	9	8	
	92.0	12	12	8	7		12	6	6	5		12	6	6	5		12	12	12	12		12	8	9	8		12	8	9	8	
	150.0	12	6	6	5		12	6	6	5		12	6	6	5		12	8	9	8		12	8	9	8		12	8	9	8	

ANCHOR NOTES:

1. SEE ANCHOR NOTES ON PAGE 5 OF 7.

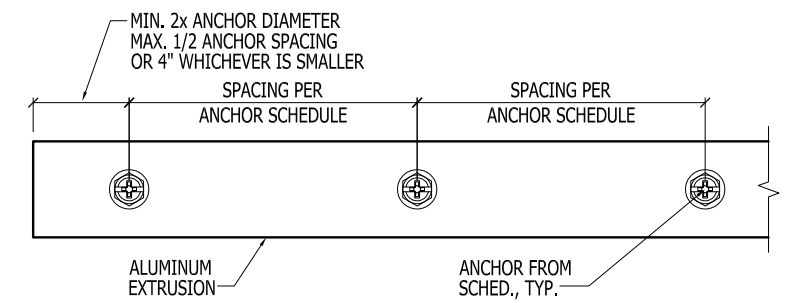

KNEZEVICH ASSOCIATES
Texas Registered Engineering Firm No. 11225
2590 S.W. 105th Terrace * Davie, Florida 33324
T (954) 821-6933 * www.Knezevich-Associates.com
email: VJ@Knezevich-Associates.com

Copyright © 2011 VJKnezevich & Associates, LLC d/b/a Knezevich Associates

0.050" ALUMINUM STORM PANEL

Cat 5 Hurricane Products, LLC
6216 28th Street East
Bradenton, FL 34203
T: (941) 752-4692

revisions

no	date	by	description
1	07/18/2011	VJK	TABLES 1A, 1B & 2

V.J. Knezevich
Professional Engineer
Texas License No.: PE 102908

JUL 18 2011

SCALE: AS NOTED
DATE: 05/28/2011

drawing no.
11-100

C:_MiDi_Projects\MiDisparate_CAD\VJKnezevich\CAD2011\Cat5_Hurricane\11-100\R1-sub\11-100-06.dwg, 7/27/2011 10:27:32 PM, Tabloid, 1:1, www.MiDisparate.com

TABLE 1A	
MAX. ALLOWABLE STORM PANEL SPAN SCHEDULE (WIND ZONES 1, 2 & 3)	
DESIGN LOAD (P.S.F.)	SPAN (FT - IN)
48.2	10'-8"
55.0	10'-0"
60.0	9'-6"
65.0	9'-2"
70.0	8'-10"
75.0	8'-6"
80.0	8'-3"
85.0	7'-9"
90.0	7'-4"
95.0	6'-11"
100.0	6'-7"
105.0	6'-3"
110.0	6'-0"

TABLE 1B	
MAX. ALLOWABLE STORM PANEL SPAN SCHEDULE (WIND ZONE 4)	
DESIGN LOAD (P.S.F.)	SPAN (FT - IN)
36.8	10'-8"
40.0	10'-5"
45.0	10'-1"
50.0	9'-10"
55.0	9'-7"
60.0	9'-5"
65.0	9'-2"
70.0	8'-10"
75.0	8'-6"
80.0	8'-3"
85.0	7'-9"
90.0	7'-4"
95.0	6'-11"
100.0	6'-7"
105.0	6'-3"
110.0	6'-0"

TABLE 2

MINIMUM STORM PANEL SEPARATION FROM GLASS (WIND ZONE 4)

POSITIVE DESIGN LOAD (W) (P.S.F.)	ACTUAL SPAN (L) (FT - IN)	COLUMN 1 MINIMUM SEPARATION FOR ALL INSTALLATIONS LESS THAN 30'-0" ABOVE GRADE (INCHES)	COLUMN 2 MINIMUM SEPARATION FOR ALL INSTALLATIONS GREATER THAN 30'-0" ABOVE GRADE (INCHES)
30.0	5'-0"	3"	1-1/8"
	8'-8"	3"	1-3/4"
	9'-0"	3"	1-7/8"
	10'-8"	3"	2-3/4"
40.0	5'-0"	3"	1-1/8"
	8'-8"	3"	2"
	9'-0"	3"	2-1/8"
	10'-5"	3-1/8"	3-1/8"
50.0	5'-0"	3"	1-1/4"
	7'-6"	3"	1-3/4"
	8'-8"	3"	2-1/4"
	9'-10"	3"	3"
60.0	5'-0"	3"	1-1/4"
	7'-6"	3"	1-7/8"
	8'-8"	3"	2-1/2"
	9'-5"	3"	3"
70.0	5'-0"	3"	1-1/4"
	6'-0"	3"	1-1/2"
	7'-6"	3"	2"
	8'-10"	3"	2-7/8"
80.0	5'-0"	3"	1-1/4"
	7'-0"	3"	1-7/8"
	8'-3"	3"	2-5/8"
90.0	5'-0"	3"	1-1/4"
	6'-0"	3"	1-1/2"
	7'-4"	3"	2-1/8"
100.0	5'-0"	3"	1-3/8"
	6'-0"	3"	1-5/8"
	6'-7"	3"	1-7/8"

TABLE 1A NOTES:

1. TABLE 1A IS TO BE USED FOR WIND ZONES 1, 2, & 3.
2. THERE IS NO SEPARATION FROM GLAZING REQUIRED WHEN USING TABLE 1A.
3. ENTER TABLE 1A WITH NEGATIVE DESIGN LOAD TO DETERMINE THE MAXIMUM PANEL LENGTH. LINEAR INTERPOLATION MAY BE USED TO DETERMINE ALLOWABLE SPANS.

TABLE 1B AND TABLE 2 NOTES:

1. TABLE 1B IS TO BE USED FOR WIND ZONE 4.
2. USE TABLE 2 TO DETERMINE SHUTTER SEPARATION FROM GLAZING FOR WIND ZONE 4 ONLY.
3. ENTER TABLE 1B WITH NEGATIVE DESIGN LOAD TO DETERMINE THE MAXIMUM PANEL LENGTH. LINEAR INTERPOLATION MAY BE USED TO DETERMINE ALLOWABLE SPANS.

KNEZEVICH ASSOCIATES
Texas Registered Engineering Firm No. 11225
2590 S.W. 105th Terrace * Davie, Florida 33324
T (954) 821-6933 * www.Knezevich-Associates.com
email: VJ@Knezevich-Associates.com

Copyright © 2011 VJKnezevich & Associates, LLC d/b/a Knezevich Associates

0.050" ALUMINUM STORM PANEL

Cat 5 Hurricane Products, LLC
6216 28th Street East
Bradenton, FL 34203
T: (941) 752-4692

revisions

no.	date	by	description
1	7/18/2011	VJK	TABLES 1A, 1B & 2

V. J. Knezevich
Professional Engineer
Texas License No.: PE 102908

VLADIMIR J. KNEZEVICH
STATE OF TEXAS
PROFESSIONAL ENGINEER

JUL 18 2011

date: 05/28/2011

drawing no.
11-100

sheet 7 of 7