GENERAL NOTES: (IBC 2006 & IRC 2006 w/ 2006 TEXAS REVISIONS)

1- DEFINITION: THIS PRODUCT IS A HURRICANE PROTECTION DEVICE; DESIGNED, CONSTRUCTED AND ERECTED TO EASILY ENCLOSE AN AREA, PROVIDING PROTECTION FROM HURRICANE FORCE WINDS AND WIND BORNE DEBRIS WITHIN THE ALLOWABLE DESIGNED PRESSURES AND LIMITATIONS STATED IN THIS APPROVAL.

2- POSTING: A PERMANENT LABEL SHALL BE PROVIDED AS PER IBC 2006 SECTION 1703.5. IT SHALL BE PLACED ON A READILY VISIBLE LOCATION AND A MINIMUM OF ONE LABEL PER OPENING.

3- GLASS SEPARATION: PRODUCT IS QUALIFIED AS "NON POROUS", THEREFORE GLAZING SEPARATION IS NOT REQUIRED WITH EXCEPTION FOR THE FOLLOWING LOCATIONS:
3.1- WIND ZONE 4 AS DEFINED IN ASTM E 1996 (LOCATIONS WITH WIND GUST GREATER THAN 140 MPH)
3.2- ESSENTIAL FACILITIES AS DEFINED IN ASCE 7

IN ORDER TO COMPLY WITH 3.1 AND 3.2 USE TABLE 1 TO DETERMINE THE PROPER GLASS SEPARATION.

4- LOADS: DESIGNED LOAD CALCULATED BASED ON THE ASCE 7 AND PROVIDED BY A PROFESSIONAL ARCHITECT OR ENGINEER FOR EACH SPECIFIC PROJECT. THE CALCULATED DESIGNED PRESSURE MUST NOT EXCEED THE ALLOWABLE PRESSURES FOR EACH SHUTTER COMPONENT TO BE USED.

5- MATERIAL: ALL EXTRUDED ALUMINUM SHAPES SHALL BE MADE OF 6063-T6 OR AS NOTED.

6- FASTENERS: ANCHORS SHALL BE CORROSION RESISTANT AS SPECIFIED IN SECTION R325 (IRC 2006 TEXAS REVISIONS) AND CHAPTER 17 (IBC 2006 TEXAS REVISIONS). ANCHORS ARE TO BE SELECTED BASED ON AREA LOCATION (SEAWARD, INLAND I OR INLAND II).

7- REINFORCEMENTS SUCH AS MULLIONS WERE DESIGNED BY RATIONAL ANALYSIS AND ARE PART OF THESE DRAWINGS. DUE TO MANY VARIATIONS OF MULLIONS TYPE, LOADS AND DIMENSIONS BECOME IMPRACTICAL ADDRESSING ALL CONDITIONS IN ONE SET OF DRAWINGS. THE CONDITIONS ADDRESSED IN THE PROPOSED DRAWINGS HAVE CONSERVATIVE LIMITATIONS IN ORDER TO FACILITATE THE DESIGN. SITE SPECIFIC CONDITIONS CAN BE ADDRESSED ON A JOB BASIS PROVIDED PROPER ENGINEERING BASED ON THE ALUMINUM DESIGN MANUAL 05.

8- USE: IT SHALL BE THE RESPONSIBILITY OF THE CONTRACTOR, ARCHITECT OR ENGINEER OF RECORD TO VERIFY THE FOLLOWING:
8.1- THE STABILITY OF THE STRUCTURE WHERE THE PRODUCT IS TO BE ATTACHED INSURING PROPER ANCHORAGE.
8.2- THE SITE SPECIFIC PROJECT CRITERIA, SUCH AS BUT NOT LIMITED TO, LOCAL CODE REQUIREMENTS, DESIGNED PRESSURES ETC.
8.3- THAT THIS APPROVAL IS ADEQUATE TO THE SPECIFIC PROJECT.

CODE AND STANDARD COMPLIANCE:

INTERNATIONAL BUILDING CODE (IBC 2006) WITH TEXAS REVISIONS
INTERNATIONAL RESIDENTIAL CODE (IRC 2006) WITH TEXAS REVISIONS
ASTM E330, E1886, E1996 (LEVEL D MISSILE)

TABLE 1
ALLOWABLE DESIGNED RATING (PSF)

FW MAX. (IN)	TT MAX. (IN)	DESIGN RATING (PSF)	TOTAL GLASS SEPARATION (GS) INCHES	
			GS1	GS2
91	84	±80	6	8
103	96	±80	6 3/4	9
115 1/8	108 1/8	±80	7 1/4	9 3/4
127	120	±76	8	10 3/4
139	132	±72	8 1/2	11 1/2
151	144	±68	9	12 1/4
163	156	±64	9 1/2	13
174 3/4	167 3/4	±60	9 3/4	13 1/4
187	180	±54	10	13 3/4
203 3/4	196 3/4	±45	10	13 3/4

NOTES:
REFER TO GENERAL NOTES 3 FOR GLASS SEPARATION DEFINITION
GS1- GLASS SEPARATION FOR INSET AND WALL MOUNTS UNITS
GS2- GLASS SEPARATION FOR BUILT-OUT AND MULLION MOUNTS UNITS

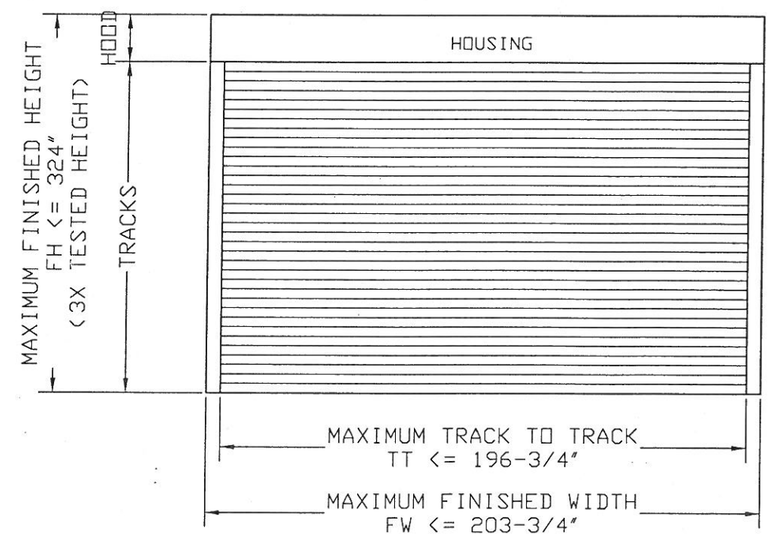

DESIGN SCHEDULE	
COMPONENT	SHEET
SLAT ALLOWABLE PRESSURE - TABLE 1	1
GLASS SEPARATION - TABLE 1	1
TRACK REACTION / ANCHORAGE - TABLE 2	4 & 5
TRACK REACTION / ANCHORAGE - TABLE 3	6 & 7
MULLION	8 & 9

NOTES:
1- ALLOWABLE DESIGNED PRESSURE ARE FUNCTION OF THE LOWEST ALLOWABLE DESIGNED LOAD FOR EACH COMPONENT (SLATS, ANCHORAGE & MULLIONS)
2- DESIGNED PRESSURES MUST NOT EXCEED 80 PSF.
3- FINISHED WIDTH (FW) MUST NOT EXCEED 203-3/4".
4- MAXIMUM HEIGHT MUST NOT EXCEED 324"

ATLANTIC METAL EXTRUSION, LLC
1002 LEXINGTON RD. S22-135
GEORGETOWN, KY 40324
Ph.: (859) 227-1320

PRODUCT:
Impact Resistant Rolling Door
LARGE & SMALL MISSILE IMPACT RATED

Engineering:
EngCo Inc.
CR 11234
6971 W. Sunrise Blvd. 104
Plantation, Fl. 33313
ENGCO@AOL.COM

STATE OF TEXAS
PEDRO FIGUEIREDO
102937
LICENSED
PROFESSIONAL ENGINEER

MAR 0 3 2010

Engineer Seal
Pedro De Figueiredo
TEXAS - PE 102937

DRAFTING:
PK DRAFTING & MORE

Date: 03/03/2010
Scale: NA
Design by: PPMF

Drawing Number
10-045

TYPICAL SINGLE UNIT ELEVATION

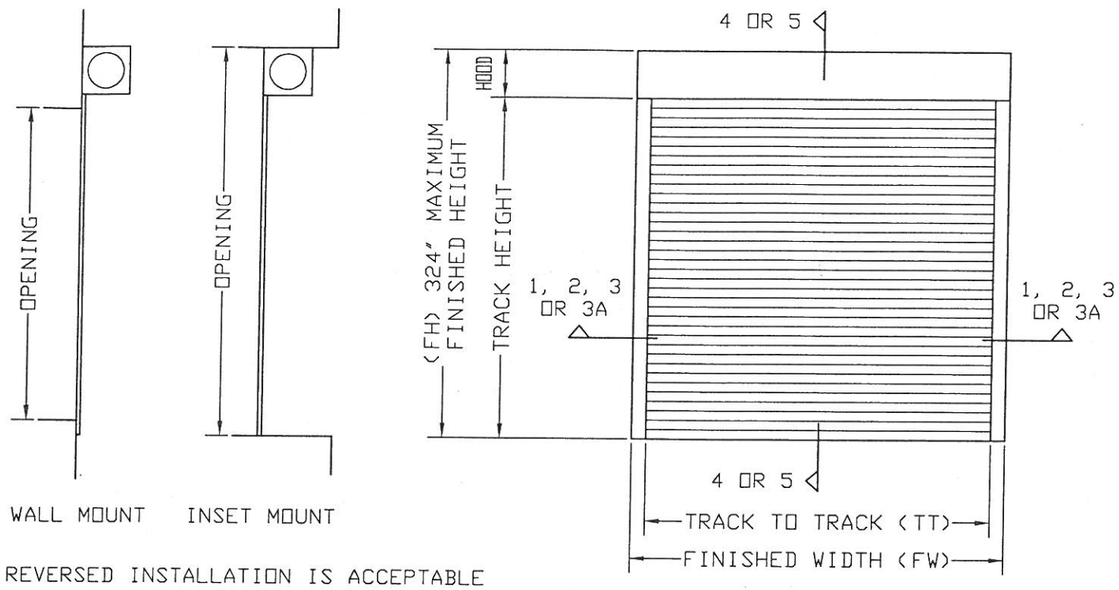

REVERSED INSTALLATION IS ACCEPTABLE

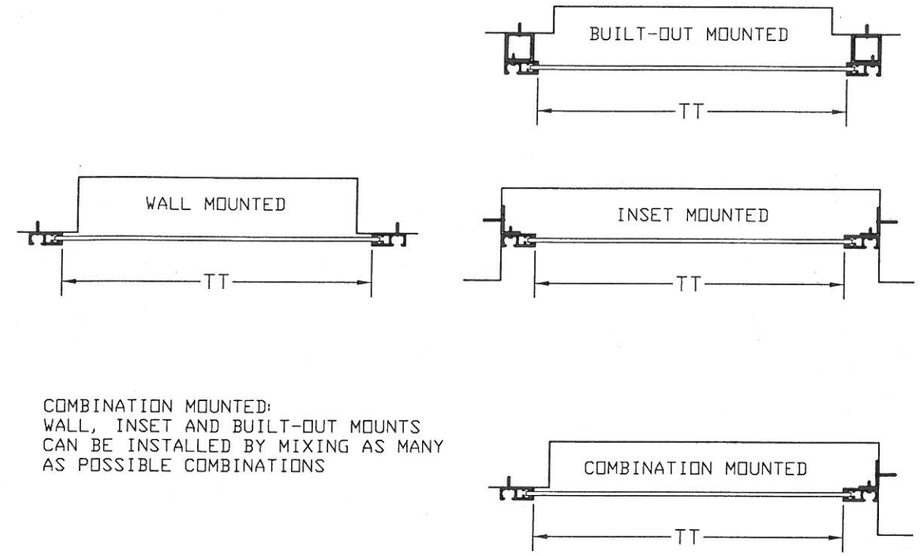

COMBINATION MOUNTED:
WALL, INSET AND BUILT-OUT MOUNTS CAN BE INSTALLED BY MIXING AS MANY AS POSSIBLE COMBINATIONS

TYPICAL MULTIPLE UNITS ELEVATION

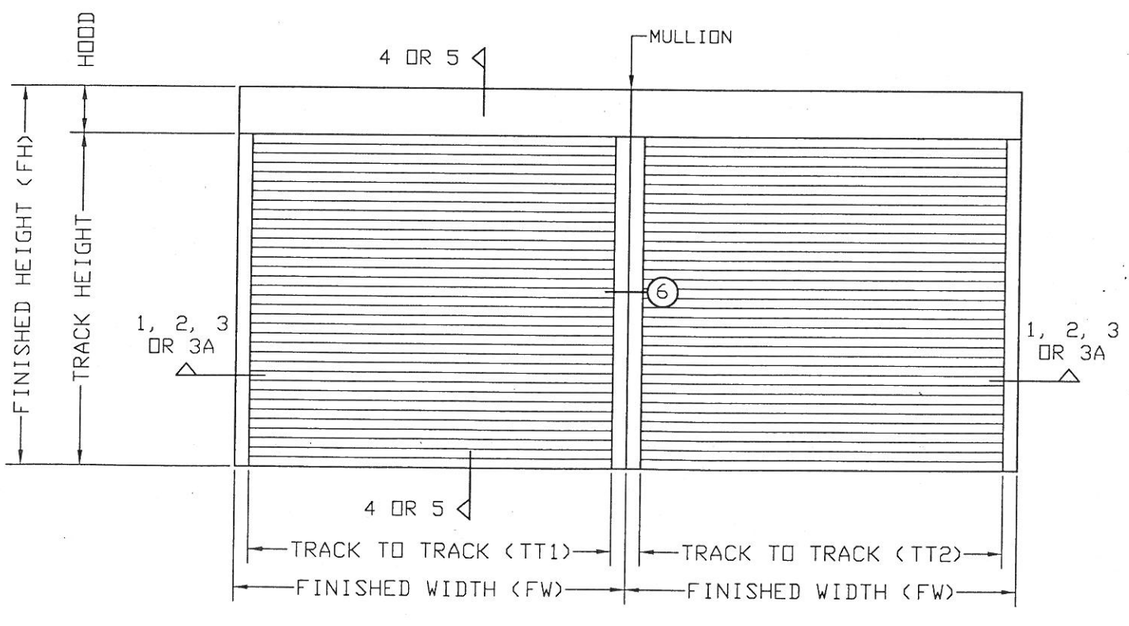

TT1 = TT2

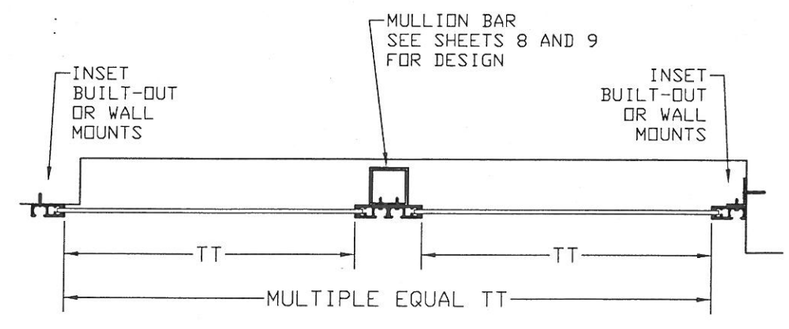

ATLANTIC METAL EXTRUSION, LLC
1002 LEXINGTON RD. S22-135
GEORGETOWN, KY 40324
Ph.: (859) 227-1320

PRODUCT:
Impact Resistant Rolling Door
LARGE & SMALL MISSILE IMPACT RATED

Engineering:
EngCo Inc.
CR 11234
6971 W. Sunrise Blvd. 104
Plantation, Fl. 33313
ENGCO@AOL.COM

STATE OF TEXAS
PEDRO FIGUEIREDO
102937
LICENSED
PROFESSIONAL ENGINEER

MAR 0 3 2010

Engineer Seal
Pedro De Figueiredo
TEXAS - PE 102937

DRAFTING:
PK DRAFTING & MORE

Date: 03/03/2010
Scale: NA
Design by: PPMF

Drawing Number
10-045

SHEET
2 of 11

TYPICAL VERTICAL SECTIONS

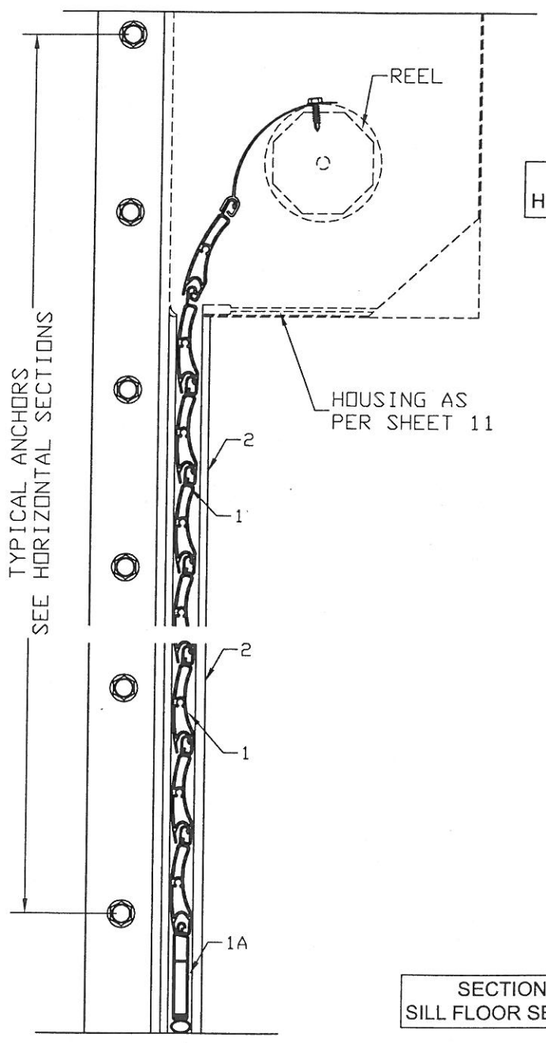

SECTION 4
HEADER CEILING SECTION

SECTION 4
SILL FLOOR SECTION

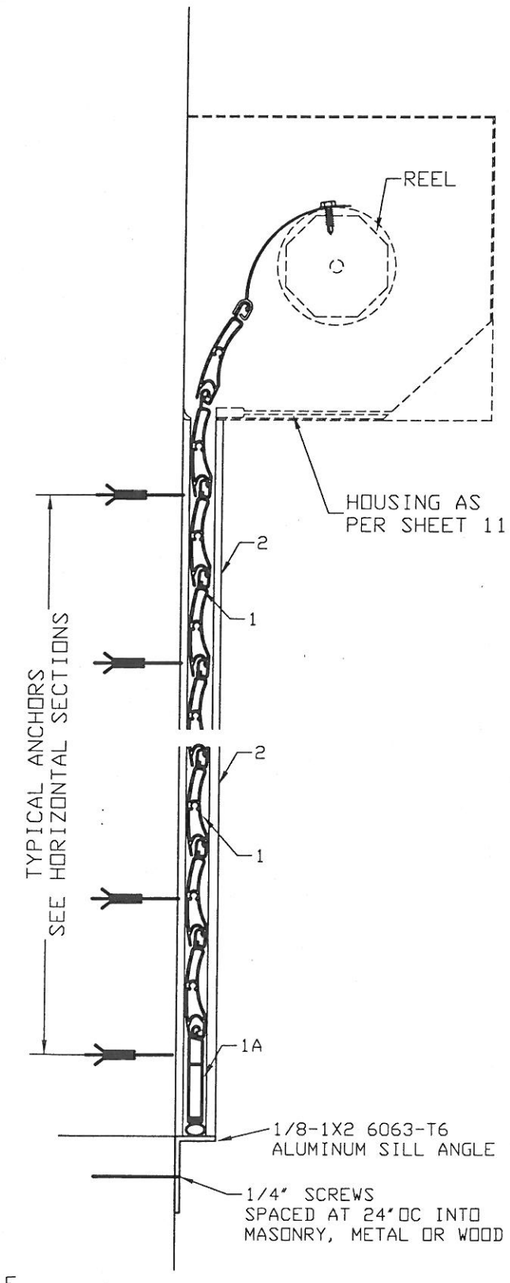

SECTION 5
HEADER WALL SECTION

SECTION 5
SILL WALL SECTION

REVERSED INSTALLATION IS ACCEPTABLE

ATLANTIC
METAL
EXTRUSION,LLC

1002 LEXINGTON RD. S22-135
GEORGETOWN, KY 40324
Ph.: (859) 227-1320

PRODUCT:
Impact Resistant
Rolling Door
LARGE & SMALL MISSILE
IMPACT RATED

Engineering:
EngCo Inc.
CR 11234
6971 W. Sunrise Blvd. 104
Plantation, Fl. 33313
ENGCO@AOL.COM

STATE OF TEXAS
PEDRO FIGUEIREDO
102937
LICENSED
PROFESSIONAL ENGINEER

MAR 0 3 2010

Engineer Seal
Pedro De Figueiredo
TEXAS - PE 102937

DRAFTING:
PK DRAFTING & MORE

Date: 03/03/2010
Scale: NA
Design by: PPMF

Drawing Number
10-045

TABLE 2
ANCHOR SPACING

				ANCHOR TYPE & SPACING WALL - MOUNT 1					ANCHOR TYPE & SPACING 3X3 BO - MOUNT 2					ANCHOR TYPE & SPACING 3X2 BO - MOUNT 2				
TT	PD	Vx	Vy	A	B	C	D	E	A	B	C	D	E	A	B	C	D	E
84	30	0	105	6	6	6	6	6	6	6	6	6	6	6	6	6	6	6
	35	0	123	6	6	6	6	6	6	6	6	6	6	6	6	6	6	6
	40	0	140	6	6	6	6	6	6	6	6	6	6	6	6	6	6	6
	45	14	158	6	6	6	6	6	6	6	6	6	6	6	6	6	6	6
	50	85	175	6	6	6	6	6	6	6	6	6	6	6	6	6	6	6
	54	139	189	6	6	6	6	6	6	6	6	6	6	6	6	6	6	6
	55	153	193	6	6	6	6	6	6	6	6	6	6	6	6	6	6	6
	60	217	210	6	6	6	6	6	6	6	6	6	6	6	6	6	6	6
	64	258	224	6	6	6	6	6	6	6	6	6	6	6	6	6	6	6
	65	267	228	6	6	6	6	6	6	6	6	6	6	6	6	6	6	6
	68	298	238	6	6	6	6	6	6	6	6	6	6	6	6	6	6	6
	70	317	245	6	6	6	6	6	6	6	6	6	6	6	6	6	6	6
	72	349	252	6	6	6	6	6	6	6	6	5	6	6	6	6	6	6
	75	396	263	6	6	6	6	6	6	6	6	5	6	6	6	6	5	6
	76	412	266	6	6	6	6	6	6	6	5	4	6	6	6	6	5	6
	80	475	280	6	6	6	5	6	5	6	5	4	6	6	6	6	4	6
96	30	102	120	6	6	6	6	6	6	6	6	6	6	6	6	6	6	6
	35	171	140	6	6	6	6	6	6	6	6	6	6	6	6	6	6	6
	40	244	160	6	6	6	6	6	6	6	6	6	6	6	6	6	6	6
	45	325	180	6	6	6	6	6	6	6	6	6	6	6	6	6	6	6
	50	406	200	6	6	6	6	6	6	6	6	4	6	6	6	6	5	6
	54	467	216	6	6	6	6	6	5	6	5	4	6	6	6	6	4	6
	55	482	220	6	6	6	6	6	5	6	5	4	6	6	6	6	4	6
	60	557	240	6	6	6	5	6	4	5	4	3	6	6	6	5	4	6
	64	606	256	6	6	6	4	6	4	4	4	3	6	5	6	5	3	6
	65	618	260	6	6	6	4	6	4	4	4	3	6	5	5	4	3	6
	68	653	272	6	6	6	4	6	4	4	3	3	6	5	5	4	3	6
	70	675	280	6	6	6	4	6	4	4	3	3	6	4	5	4	3	6
	72	711	288	6	6	6	4	6	-	4	3	-	6	4	5	4	3	6
	75	765	300	6	6	6	3	6	-	-	3	-	6	4	4	4	3	6
	76	780	304	6	6	6	3	6	-	-	3	-	6	4	4	3	-	6
	80	843	320	6	6	6	3	6	-	-	-	-	6	4	4	3	-	6
108. 125	30	316	135	6	6	6	6	6	6	6	6	6	6	6	6	6	6	6
	35	399	158	6	6	6	6	6	6	6	6	5	6	6	6	6	5	6
	40	487	180	6	6	6	6	6	5	6	5	4	6	6	6	6	4	6
	45	579	203	6	6	6	5	6	4	5	4	3	6	5	6	5	4	6
	50	670	225	6	6	6	4	6	4	4	3	3	6	5	5	4	3	6
	54	739	243	6	6	6	4	6	-	4	3	-	6	4	5	4	3	6
	55	755	248	6	6	6	3	6	-	4	3	-	6	4	4	4	3	6
	60	839	270	6	6	6	3	6	-	-	-	-	6	4	4	3	-	6
	64	897	288	6	6	6	3	6	-	-	-	-	6	-	4	3	-	6
	65	911	293	6	6	6	3	6	-	-	-	-	6	-	4	3	-	6
	68	951	306	6	6	6	3	6	-	-	-	-	6	-	-	3	-	6
	70	977	315	6	6	6	3	6	-	-	-	-	6	-	-	3	-	6
	72	1016	324	6	6	6	-	6	-	-	-	-	6	-	-	3	-	6
	75	1074	338	6	6	6	-	6	-	-	-	-	6	-	-	-	-	6
	76	1090	342	6	6	6	-	6	-	-	-	-	6	-	-	-	-	6
	80	1154	360	6	6	5	-	6	-	-	-	-	5	-	-	-	-	6
120	30	490	150	6	6	6	6	6	5	6	5	4	6	6	6	6	4	6
	35	586	175	6	6	6	5	6	4	5	4	3	6	5	6	5	3	6
	40	688	200	6	6	6	4	6	4	4	3	-	6	4	5	4	3	6
	45	791	225	6	6	6	3	6	-	-	3	-	6	4	4	3	-	6
	50	894	250	6	6	6	3	6	-	-	-	-	6	-	4	3	-	6
	54	968	270	6	6	6	3	6	-	-	-	-	6	-	-	3	-	6
	55	986	275	6	6	6	3	6	-	-	-	-	6	-	-	3	-	6
	60	1080	300	6	6	6	-	6	-	-	-	-	6	-	-	-	-	6
	64	1147	320	6	6	5	-	6	-	-	-	-	5	-	-	-	-	6
	65	1163	325	6	6	5	-	6	-	-	-	-	5	-	-	-	-	6
	68	1208	340	6	6	5	-	6	-	-	-	-	5	-	-	-	-	6
	70	1237	350	6	5	5	-	6	-	-	-	-	5	-	-	-	-	6
	72	1277	360	5	5	5	-	6	-	-	-	-	5	-	-	-	-	6
	75	1338	375	5	5	5	-	6	-	-	-	-	5	-	-	-	-	6
	76	1355	380	5	5	5	-	6	-	-	-	-	-	-	-	-	-	5

TABLE 2 CONTINUOUS ON SHEET 5

TYPICAL HORIZONTAL SECTIONS

MOUNT TYPE 1
WALL MOUNT

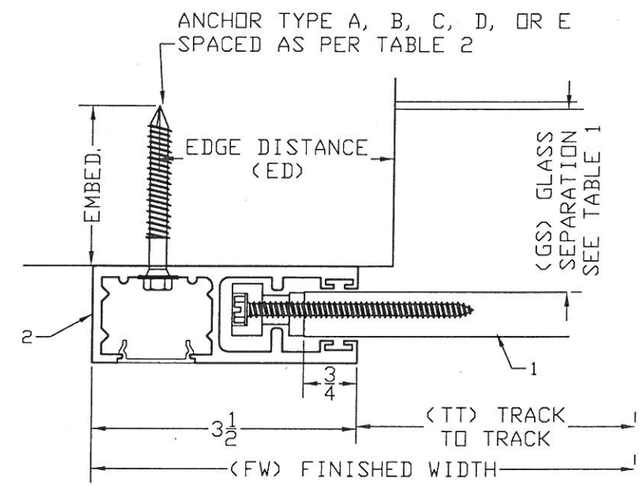

ANCHOR SCHEDULE:

ANCHOR	DESCRIPTION	MATERIAL	EMBEDMENT	ED
A	5/16" ITW TAPCONS	MIN. 2899 psi CONCRETE	2 1/4"	3 1/8"
B	5/16" ITW TAPCONS	GROUT FILLED C-90 BLOCK	2 1/4"	4"
C	5/16"-18X1" GRADE 5 SELF DRILLING SCREWS	MIN. 1/4" 6063-T6 ALUM. OR A36 3/16" STEEL		1/2" 3/8"
D	5/16" ITW TAPCONS	WOOD WITH G>=.55	2 1/4"	1-1/4"
E	3/8" POWERS WEDGE BOLT STAINLESS OR CARBON STEEL	MIN. 3000 psI CONCRETE	3 1/2"	4-1/2"

NOTES:
1- ED - EDGE DISTANCE
2- EMB. - ANCHOR EMBEDMENT
3- ANCHOR EMBEDMENT AND EDGE DISTANCE ARE MEASURED BEYOND WALL DRESSING

ATLANTIC
METAL
EXTRUSION, LLC
1002 LEXINGTON RD. S22-135
GEORGETOWN, KY 40324
Ph.: (859) 227-1320

PRODUCT:
Impact Resistant
Rolling Door
LARGE & SMALL MISSILE
IMPACT RATED

Engineering:
EngCo Inc.
CR 11234
6971 W. Sunrise Blvd. 104
Plantation, Fl. 33313
ENGCO@AOL.COM

STATE OF TEXAS
PEDRO FIGUEIREDO
102937
LICENSED
PROFESSIONAL ENGINEER
MAR 0 3 2010

Engineer Seal
Pedro De Figueiredo
TEXAS - PE 102937

DRAFTING:
PK DRAFTING & MORE

Date: 03/03/2010
Scale: NA
Design by: PPMF

Drawing Number
10-045

TABLE 2 (CONT.)
ANCHOR SPACING

				ANCHOR TYPE & SPACING WALL MOUNTED - 1					ANCHOR TYPE & SPACING 3X3 BO - MOUNT 2					ANCHOR TYPE & SPACING 3X2 BO - MOUNT 2				
TT	PD	Vx	Vy	A	B	C	D	E	A	B	C	D	E	A	B	C	D	E
132	30	642	165	6	6	6	4	6	4	4	3	3	6	4	5	4	3	6
	35	751	193	6	6	6	4	6	–	4	3	3	6	4	4	3	3	6
	40	868	220	6	6	6	3	6	–	–	–	–	6	–	–	3	–	6
	45	982	248	6	6	6	3	6	–	–	–	–	6	–	–	–	–	6
	50	1095	275	6	6	6	–	6	–	–	–	–	6	–	–	–	–	6
	54	1177	297	6	6	5	–	6	–	–	–	–	5	–	–	–	–	6
	55	1197	303	6	6	5	–	6	–	–	–	–	5	–	–	–	–	6
	60	1300	330	5	5	5	–	6	–	–	–	–	5	–	–	–	–	5
	64	1376	352	5	5	5	–	6	–	–	–	–	–	–	–	–	–	5
	65	1394	358	5	5	4	–	6	–	–	–	–	–	–	–	–	–	5
	68	1443	374	5	5	4	–	6	–	–	–	–	–	–	–	–	–	5
	70	1475	385	5	5	4	–	6	–	–	–	–	–	–	–	–	–	–
	72	1518	396	4	4	4	–	6	–	–	–	–	–	–	–	–	–	–
144	30	777	180	6	6	6	3	6	–	–	3	3	6	4	4	4	3	6
	35	901	210	6	6	6	3	6	–	–	–	–	6	–	4	3	3	6
	40	1033	240	6	6	6	–	6	–	–	–	–	6	–	–	3	–	6
	45	1157	270	6	6	6	–	6	–	–	–	–	5	–	–	–	–	6
	50	1281	300	5	5	5	–	6	–	–	–	–	5	–	–	–	–	6
	54	1369	324	5	5	5	–	6	–	–	–	–	–	–	–	–	–	5
	55	1391	330	5	5	4	–	6	–	–	–	–	–	–	–	–	–	5
	60	1504	360	5	4	4	–	6	–	–	–	–	–	–	–	–	–	5
	64	1588	384	4	4	4	–	6	–	–	–	–	–	–	–	–	–	5
	65	1609	390	4	4	4	–	6	–	–	–	–	–	–	–	–	–	5
	68	1664	408	4	4	4	–	6	–	–	–	–	–	–	–	–	–	–
156	30	902	195	6	6	6	3	6	–	–	–	–	6	–	4	3	3	6
	35	1039	228	6	6	6	–	6	–	–	–	–	6	–	–	3	–	6
	40	1186	260	6	6	5	–	6	–	–	–	–	5	–	–	–	–	6
	45	1321	293	5	5	5	–	6	–	–	–	–	5	–	–	–	–	6
	50	1456	325	5	5	4	–	6	–	–	–	–	–	–	–	–	–	5
	54	1551	351	4	4	4	–	6	–	–	–	–	–	–	–	–	–	5
	55	1574	358	4	4	4	–	6	–	–	–	–	–	–	–	–	–	5
	60	1696	390	4	4	4	–	6	–	–	–	–	–	–	–	–	–	–
	64	1790	416	4	4	3	–	6	–	–	–	–	–	–	–	–	–	–
167. 75	30	1016	210	6	6	6	–	6	–	–	–	–	6	–	–	3	–	6
	35	1166	245	6	6	6	–	6	–	–	–	–	5	–	–	–	–	6
	40	1328	280	5	5	5	–	6	–	–	–	–	5	–	–	–	–	6
	45	1474	315	5	5	4	–	6	–	–	–	–	–	–	–	–	–	5
	50	1620	349	4	4	4	–	6	–	–	–	–	–	–	–	–	–	5
	54	1721	377	4	4	4	–	6	–	–	–	–	–	–	–	–	–	–
	55	1745	384	4	4	4	–	6	–	–	–	–	–	–	–	–	–	–
	60	1877	419	4	–	3	–	6	–	–	–	–	–	–	–	–	–	–
180	30	1196	225	6	6	5	–	6	–	–	–	–	5	–	–	–	–	6
	35	1372	263	5	5	5	–	6	–	–	–	–	–	–	–	–	–	5
	40	1547	300	4	4	4	–	6	–	–	–	–	–	–	–	–	–	5
	45	1703	338	4	4	4	–	6	–	–	–	–	–	–	–	–	–	–
	50	1854	375	4	4	3	–	6	–	–	–	–	–	–	–	–	–	–
	54	1952	405	–	–	3	–	6	–	–	–	–	–	–	–	–	–	–
	55	1975	413	–	–	3	–	6	–	–	–	–	–	–	–	–	–	–
196. 75	30	1445	246	5	5	4	–	6	–	–	–	–	–	–	–	–	–	5
	35	1660	287	4	4	4	–	6	–	–	–	–	–	–	–	–	–	–
	40	1852	328	4	4	3	–	6	–	–	–	–	–	–	–	–	–	–
	45	2021	369	–	–	3	–	6	–	–	–	–	–	–	–	–	–	–

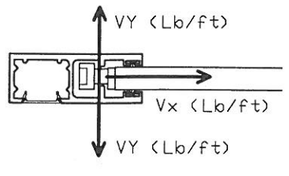

CONTRACTOR TO VERIFY ADEQUACY OF STRUCTURE
FOR MAXIMUM IMPOSED LOADS Vy AND Vx

TYPICAL HORIZONTAL SECTIONS

MOUNT TYPE 2
BUILT-OUT MOUNT

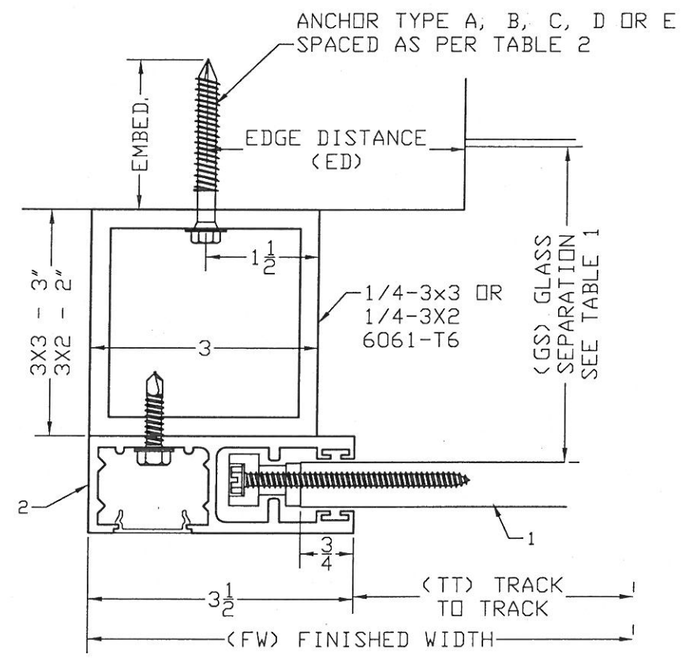

ANCHOR SCHEDULE:

ANCHOR	DESCRIPTION	MATERIAL	EMBEDMENT	ED
A	5/16" ITW TAPCONS	MIN. 2899 psi CONCRETE	2 1/4"	3 1/8"
B	5/16" ITW TAPCONS	GROUT FILLED C-90 BLOCK	2 1/4"	4"
C	5/16"-18X1" GRADE 5 SELF DRILLING SCREWS	MIN. 1/4" 6063-T6 ALUM. OR A36 3/16" STEEL		1/2" 3/8"
D	5/16" ITW TAPCONS	WOOD WITH G>=.55	2 1/4"	1-1/4"
E	3/8" POWERS WEDGE BOLT STAINLESS OR CARBON STEEL	MIN. 3000 psI CONCRETE	3 1/2"	4-1/2"

NOTES:
1- ED - EDGE DISTANCE
2- EMB. - ANCHOR EMBEDMENT
3- ANCHOR EMBEDMENT AND EDGE DISTANCE ARE MEASURED BEYOND WALL DRESSING

ATLANTIC METAL EXTRUSION,LLC
1002 LEXINGTON RD. S22-135
GEORGETOWN, KY 40324
Ph.: (859) 227-1320

PRODUCT:
Impact Resistant Rolling Door
LARGE & SMALL MISSILE IMPACT RATED

Engineering:
EngCo Inc.
CR 11234
6971 W. Sunrise Blvd. 104
Plantation, Fl. 33313
ENGCO@AOL.COM

STATE OF TEXAS
PEDRO FIGUEIREDO
102937
LICENSED
PROFESSIONAL ENGINEER

MAR 0 3 2010

Engineer Seal
Pedro De Figueiredo
TEXAS - PE 102937

DRAFTING:
PK DRAFTING & MORE

Date: 03/03/2010
Scale: NA
Design by: PPMF

Drawing Number
10-045

TABLE 3
ANCHOR SPACING

TT	PD	Vx	Vy	ANCHOR TYPE & SPACING INSET - MOUNT 3					ANCHOR TYPE & SPACING INSET - MOUNT 3a				
				A	B	C	D	E	A	B	C	D	E
84	30	0	105	6	6	6	6	6					
	35	0	123	6	6	6	6	6					
	40	0	140	6	6	6	6	6					
	45	14	158	6	6	6	6	6					
	50	85	175	6	6	6	6	6					
	54	139	189	6	6	6	6	6					
	55	153	193	6	6	6	6	6	6	6	6	6	6
	60	217	210	6	6	6	6	6					
	64	258	224	6	6	6	6	6					
	65	267	228	6	6	6	6	6					
	68	298	238	6	6	6	6	6					
	70	317	245	6	6	6	6	6					
	72	349	252	6	6	6	6	6					
	75	396	263	6	6	6	6	6					
	76	412	266	6	6	6	6	6					
	80	475	280	6	6	6	5	6					
96	30	102	120	6	6	6	6	6					
	35	171	140	6	6	6	6	6					
	40	244	160	6	6	6	6	6					
	45	325	180	6	6	6	6	6					
	50	406	200	6	6	6	6	6					
	54	467	216	6	6	6	6	6					
	55	482	220	6	6	6	6	6	6	6	6	6	6
	60	557	240	6	6	6	6	6					
	64	606	256	6	6	5	5	6					
	65	618	260	6	6	5	5	6					
	68	653	272	5	6	5	5	6					
	70	675	280	5	6	5	5	6					
	72	711	288	5	6	5	4	6					
	75	765	300	5	5	4	4	6					
	76	780	304	5	5	4	4	6					
	80	843	320	4	5	4	4	6					
108, 125	30	316	135	6	6	6	6	6					
	35	399	158	6	6	6	6	6					
	40	487	180	6	6	6	6	6					
	45	579	203	6	6	6	6	6					
	50	670	225	6	6	5	5	6					
	54	739	243	5	6	5	5	6					
	55	755	248	5	6	5	5	6	6	6	6	6	6
	60	839	270	5	5	4	4	6					
	64	897	288	4	5	4	4	6					
	65	911	293	4	5	4	4	6					
	68	951	306	4	5	4	4	6					
	70	977	315	4	4	3	4	6					
	72	1016	324	4	4	3	3	6					
	75	1074	338	-	4	3	3	6					
	76	1090	342	-	4	3	3	6					
	80	1154	360	-	4	3	3	6					
120	30	490	150	6	6	6	6	6					
	35	586	175	6	6	6	6	6					
	40	688	200	6	6	5	5	6					
	45	791	225	5	6	5	5	6					
	50	894	250	4	5	4	4	6					
	54	968	270	4	5	4	4	6					
	55	986	275	4	5	4	4	6					
	60	1080	300	4	4	3	3	6	6	6	6	6	6
	64	1147	320	-	4	3	3	6					
	65	1163	325	-	4	3	3	6					
	68	1208	340	-	4	3	3	6					
	70	1237	350	-	4	3	3	6					
	72	1277	360	-	-	3	3	6					
	75	1338	375	-	-	3	3	6					
	76	1355	380	-	-	-	3	6					

TABLE 3 CONTINUOUS ON SHEET 7

TYPICAL HORIZONTAL SECTIONS

MOUNT TYPE 3
INSET MOUNT

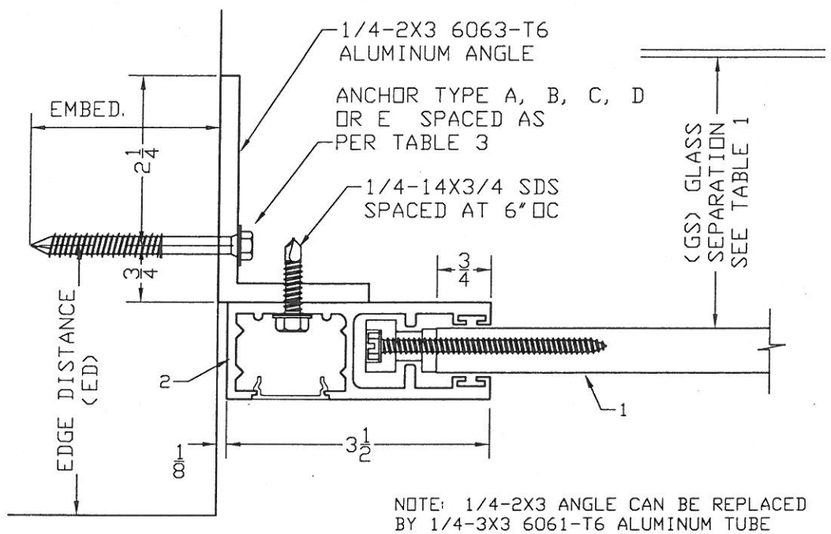

NOTE: 1/4-2X3 ANGLE CAN BE REPLACED BY 1/4-3X3 6061-T6 ALUMINUM TUBE

ANCHOR SCHEDULE:

ANCHOR	DESCRIPTION	MATERIAL	EMBEDMENT	ED
A	5/16" ITW TAPCONS	MIN. 2899 psi CONCRETE	2 1/4"	3 1/8"
B	5/16" ITW TAPCONS	GROUT FILLED C-90 BLOCK	2 1/4"	4"
C	5/16"-18X1" GRADE 5 SELF DRILLING SCREWS	MIN. 1/4" 6063-T6 ALUM. OR A36 3/16" STEEL		1/2" 3/8"
D	5/16" ITW TAPCONS	WOOD WITH G>=.55	2 1/4"	1-1/4"
E	3/8" POWERS WEDGE BOLT STAINLESS OR CARBON STEEL	MIN. 3000 psI CONCRETE	3 1/2"	4-1/2"

NOTES:
1- ED - EDGE DISTANCE
2- EMB. - ANCHOR EMBEDMENT
3- ANCHOR EMBEDMENT AND EDGE DISTANCE ARE MEASURED BEYOND WALL DRESSING

ATLANTIC METAL EXTRUSION, LLC
1002 LEXINGTON RD. S22-135
GEORGETOWN, KY 40324
Ph.: (859) 227-1320

PRODUCT:
Impact Resistant Rolling Door
LARGE & SMALL MISSILE IMPACT RATED

Engineering:
EngCo Inc.
CR 11234
6971 W. Sunrise Blvd. 104
Plantation, Fl. 33313
ENGCO@AOL.COM

STATE OF TEXAS
PEDRO FIGUEIREDO
102937
LICENSED
PROFESSIONAL ENGINEER
MAR 0 3 2010

Engineer Seal
Pedro De Figueiredo
TEXAS - PE 102937

DRAFTING:
PK DRAFTING & MORE

Date: 03/03/2010
Scale: NA
Design by: PPMF

Drawing Number
10-045

TABLE 3 (CONT.)
ANCHOR SPACING

TT	PD	Vx	Vy	ANCHOR TYPE & SPACING INSET - MOUNT 3					ANCHOR TYPE & SPACING INSET - MOUNT 3a				
				A	B	C	D	E	A	B	C	D	E
132	30	642	165	6	6	6	6	6					
	35	751	193	5	6	5	5	6					
	40	868	220	5	5	4	5	6					
	45	982	248	4	5	4	4	6					
	50	1095	275	4	4	3	4	6					
	54	1177	297	-	4	3	3	6					
	55	1197	303	-	4	3	3	6	6	6	6	6	6
	60	1300	330	-	4	3	3	6					
	64	1376	352	-	-	-	3	6					
	65	1394	358	-	-	-	3	6					
	68	1443	374	-	-	-	-	6					
	70	1475	385	-	-	-	-	6					
	72	1518	396	-	-	-	-	6					
144	30	777	180	5	6	5	5	6					
	35	901	210	5	5	4	5	6					
	40	1033	240	4	5	4	4	6					
	45	1157	270	-	4	3	3	6					
	50	1281	300	-	4	3	3	6	6	6	6	6	6
	54	1369	324	-	-	3	3	6					
	55	1391	330	-	-	3	3	6					
	60	1504	360	-	-	-	-	6					
	64	1588	384	-	-	-	-	6					
	65	1609	390	-	-	-	-	6					
	68	1664	408	-	-	-	-	6					
156	30	902	195	5	6	4	5	6					
	35	1039	228	4	5	4	4	6					
	40	1186	260	-	4	3	3	6					
	45	1321	293	-	4	3	3	6	6	6	6	6	6
	50	1456	325	-	-	-	3	6					
	54	1551	351	-	-	-	-	6					
	55	1574	358	-	-	-	-	6					
	60	1696	390	-	-	-	-	6					
	64	1790	416	-	-	-	-	6					
167.75	30	1016	210	4	5	4	4	6					
	35	1166	245	4	4	3	4	6					
	40	1328	280	-	4	3	3	6					
	45	1474	315	-	-	-	3	6	6	6	6	6	6
	50	1620	349	-	-	-	-	6					
	54	1721	377	-	-	-	-	6					
	55	1745	384	-	-	-	-	6					
	60	1877	419	-	-	-	-	6					
180	30	1196	225	4	4	3	4	6					
	35	1372	263	-	4	3	3	6					
	40	1547	300	-	-	-	3	6					
	45	1703	338	-	-	-	-	6	6	6	6	6	6
	50	1854	375	-	-	-	-	6					
	54	1952	405	-	-	-	-	6					
	55	1975	413	-	-	-	-	6					
196.75	30	1445	246	-	-	3	3	6					
	35	1660	287	-	-	-	3	6	6	6	6	6	6
	40	1852	328	-	-	-	-	6					
	45	2021	369	-	-	-	-	6					

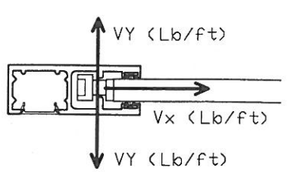

CONTRACTOR TO VERIFY ADEQUACY OF STRUCTURE FOR MAXIMUM IMPOSED LOADS Vy AND Vx

TYPICAL HORIZONTAL SECTIONS

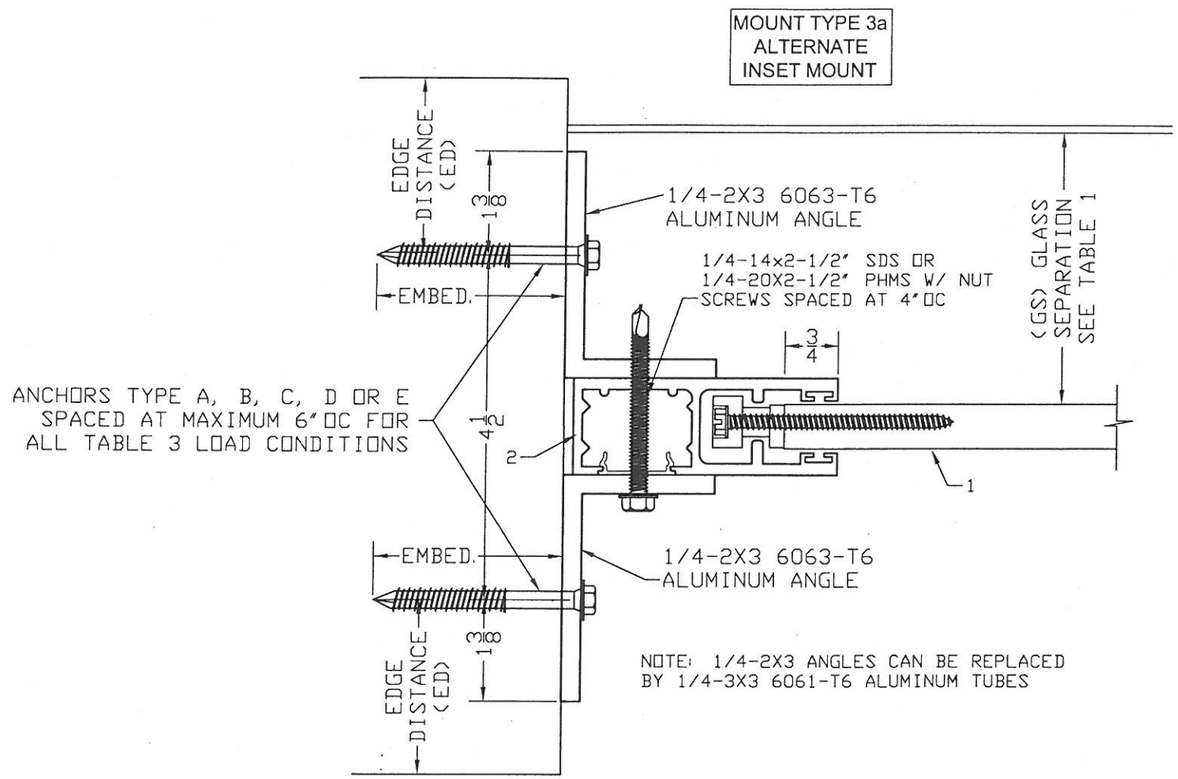

ANCHOR SCHEDULE:

ANCHOR	DESCRIPTION	MATERIAL	EMBEDMENT	ED
A	5/16" ITW TAPCONS	MIN. 2899 psi CONCRETE	2 1/4"	3 1/8"
B	5/16" ITW TAPCONS	GROUT FILLED C-90 BLOCK	2 1/4"	4"
C	5/16"-18X1" GRADE 5 SELF DRILLING SCREWS	MIN. 1/4" 6063-T6 ALUM. OR A36 3/16" STEEL		1/2" 3/8"
D	5/16" ITW TAPCONS	WOOD WITH G>=.55	2 1/4"	1-1/4"
E	3/8" POWERS WEDGE BOLT STAINLESS OR CARBON STEEL	MIN. 3000 psI CONCRETE	3 1/2"	4-1/2"

NOTES:
1- ED - EDGE DISTANCE
2- EMB. - ANCHOR EMBEDMENT
3- ANCHOR EMBEDMENT AND EDGE DISTANCE ARE MEASURED BEYOND WALL DRESSING

ATLANTIC METAL EXTRUSION, LLC
1002 LEXINGTON RD. S22-135
GEORGETOWN, KY 40324
Ph.: (859) 227-1320

PRODUCT:
Impact Resistant Rolling Door
LARGE & SMALL MISSILE IMPACT RATED

Engineering:
EngCo Inc.
CR 11234
6971 W. Sunrise Blvd. 104
Plantation, Fl. 33313
ENGCO@AOL.COM

Engineer Seal
Pedro De Figueiredo
TEXAS - PE 102937

DRAFTING:
PK DRAFTING & MORE

Date: 03/03/2010
Scale: NA
Design by: PPMF

Drawing Number
10-045

SHEET
7 of 11

EQUALLY SPACED MULLIONS SELECTION

DETAIL 6
4X MULLION SECTION

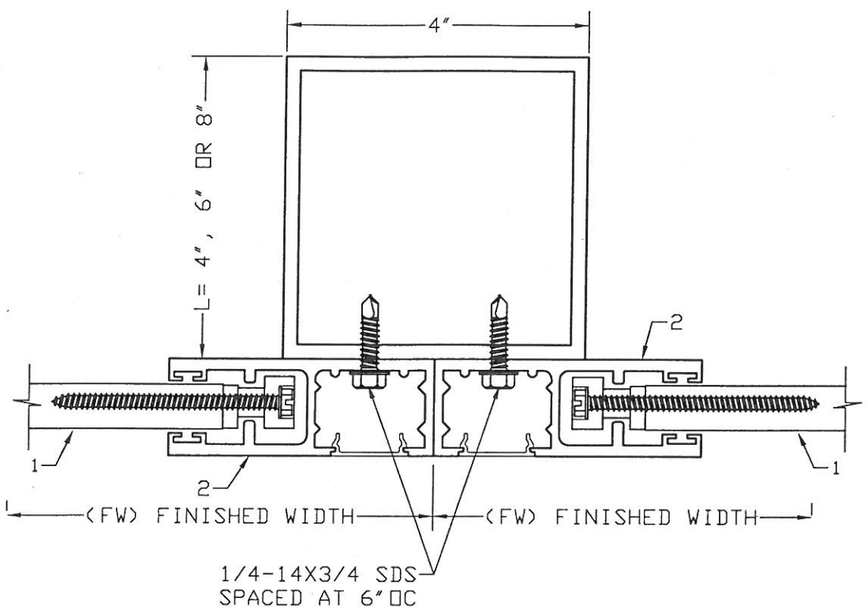

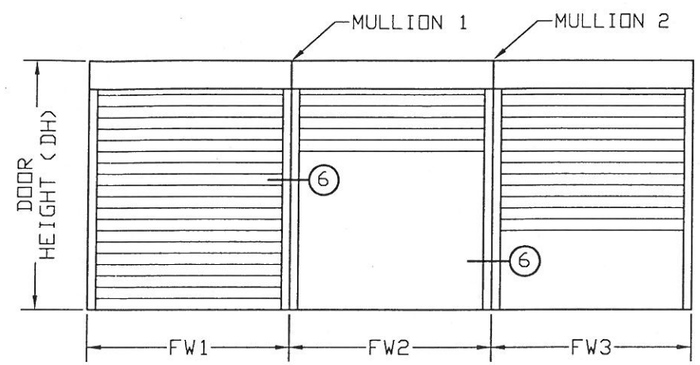

APPLICABLE ONLY FOR FW1=FW2=FW3
MULLION 1: TM1= (FW1+FW2) / 2
MULLION 2: TM2= (FW2+FW3) / 2
TM: TRIBUTARY MODULE

MULLION BARS SELECTION TABLES (PSF)

DOOR MODULE	MULLION TYPE & MAX. HEIGHT								
	1/4-4x8			1/4-4x6			1/4-4x4		
	144	132	120	120	108	96	96	84	72
204	45	45	45	41	45	45	30	43	45
175	56	60	60	48	60	60	35	50	57
163	60	64	64	51	64	64	38	54	61
139	70	72	72	60	72	72	44	63	72
115	80	80	80	73	80	80	53	76	80
103	80	80	80	80	80	80	59	80	80
91	80	80	80	80	80	80	67	80	80

NOTES:
1- MULLIONS WERE DESIGNED BY RATIONAL ANALYSIS BASED ON THE ALUMINUM DESIGN MANUAL 2005 ED. ABOVE LOADS ARE ALSO LIMITED BY THE MAXIMUM CAPACITY OF THE PRODUCT.
2- DEFLECTION CRITERIA: MAXIMUM SPAN /180
3- VALUES ABOVE IS APPLICABLE ONLY FOR EQUAL MODULES FW1=FW2=FW3.
4- UNEQUAL MODULES ARE TO BE DESIGNED BY RATIONAL ANALYSIS IN A CASE BY CASE BASIS.

ATLANTIC METAL EXTRUSION,LLC
1002 LEXINGTON RD. S22-135
GEORGETOWN, KY 40324
Ph.: (859) 227-1320

PRODUCT:
Impact Resistant Rolling Door
LARGE & SMALL MISSILE IMPACT RATED

Engineering:
EngCo Inc.
CR 11234
6971 W. Sunrise Blvd. 104
Plantation, Fl. 33313
ENGCO@AOL.COM

STATE OF TEXAS
PEDRO FIGUEIREDO
102937
LICENSED
PROFESSIONAL ENGINEER

MAR 0 3 2010

Engineer Seal
Pedro De Figueiredo
TEXAS - PE 102937

DRAFTING:
PK DRAFTING & MORE

Date: 03/03/2010
Scale: NA
Design by: PPMF

Drawing Number
10-045

EQUALLY SPACED MULLIONS WALL AND INSET CONNECTIONS

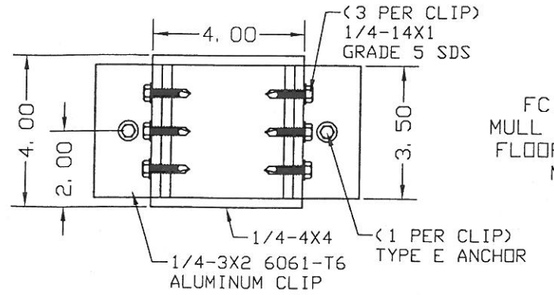

FC1 - 4X4
MULL ANCHORAGE
FLOOR/CEILING
MOUNT

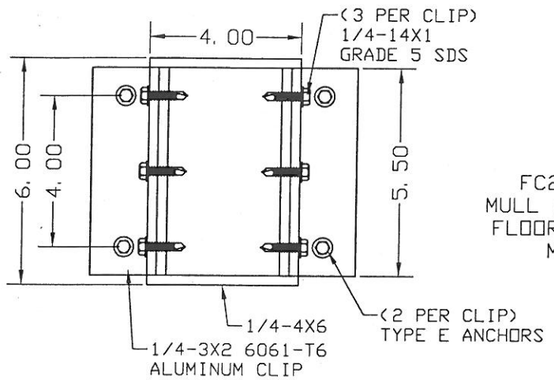

FC2 - 4X6
MULL ANCHORAGE
FLOOR/CEILING
MOUNT

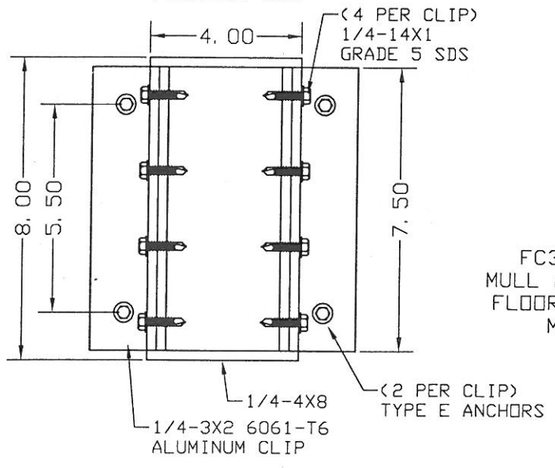

FC3 - 4X8
MULL ANCHORAGE
FLOOR/CEILING
MOUNT

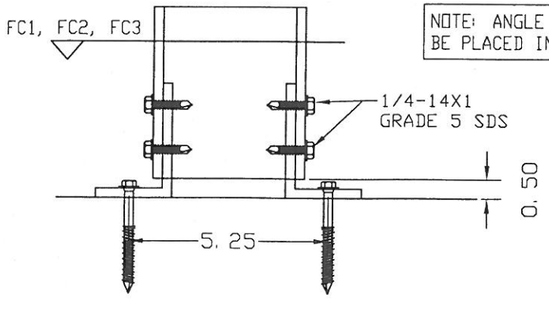

NOTE: ANGLE CLIP TO BE PLACED INSIDE TUBE

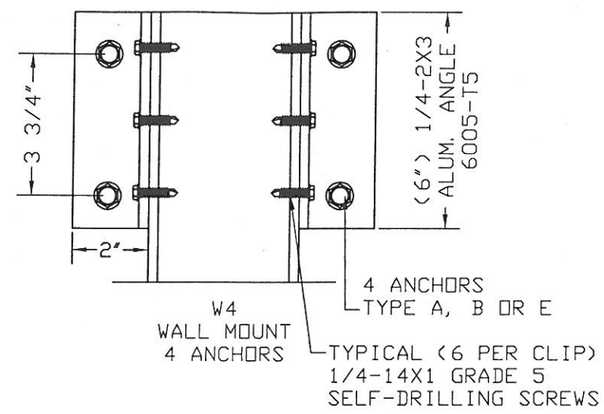

W4
WALL MOUNT
4 ANCHORS

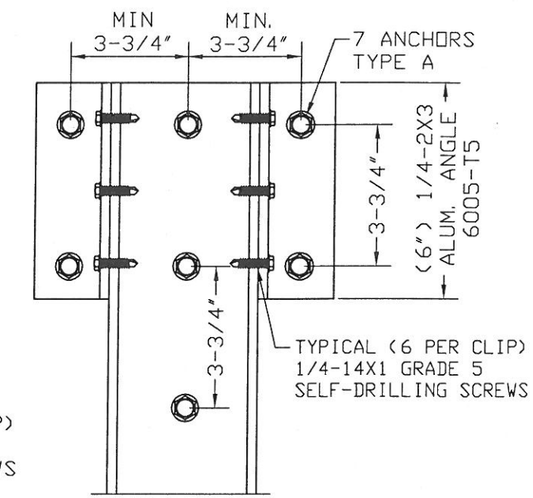

W7
WALL MOUNT
7 ANCHORS

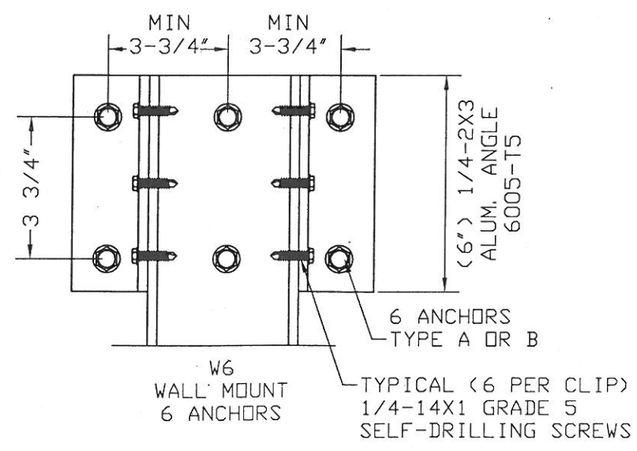

W6
WALL MOUNT
6 ANCHORS

WALL MOUNT ANCHOR SELECTION

ANCHOR TYPE	MULLION TYPE		
	4X4	4X6	4X8
A	W4	W6	W7
B	W4	W6	W6
E	W4	W4	W4

ANCHOR SCHEDULE:

ANCHOR	DESCRIPTION	MATERIAL	EMBEDMENT	EDGE DISTANCE
A	5/16" ITW TAPCONS	MIN. 2899 psi CONCRETE	2 1/4"	3 1/8"
B	5/16" ITW TAPCONS	GROUT FILLED C-90 BLOCK	2 1/4"	4"
E	3/8" POWERS WEDGE BOLT STAINLESS OR CARBON STEEL	MIN. 3000 psI CONCRETE	3 1/2"	4-1/2"

ATLANTIC METAL EXTRUSION, LLC
1002 LEXINGTON RD. S22-135
GEORGETOWN, KY 40324
Ph.: (859) 227-1320

PRODUCT:
Impact Resistant Rolling Door
LARGE & SMALL MISSILE IMPACT RATED

Engineering:
EngCo Inc.
CR 11234
6971 W. Sunrise Blvd. 104
Plantation, Fl. 33313
ENGCO@AOL.COM

STATE OF TEXAS
PEDRO FIGUEIREDO
102937
LICENSED
PROFESSIONAL ENGINEER
MAR 03 2010

Engineer Seal
Pedro De Figueiredo
TEXAS - PE 102937

DRAFTING:
PK DRAFTING & MORE

Date: 03/03/2010
Scale: NA
Design by: PPMF

Drawing Number
10-045

PRODUCT COMPONENTS

1- SLATS- 6063-T6
EXTRUDED ALUMINUM

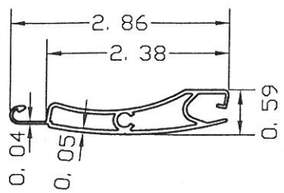

1A- BOTTOM SLAT
6063-T6 EXTRUDED
ALUMINUM

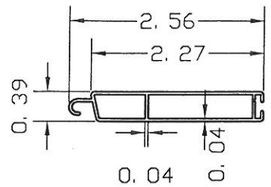

2- GUIDE RAIL
6063-T6 EXTRUDED ALUMINUM

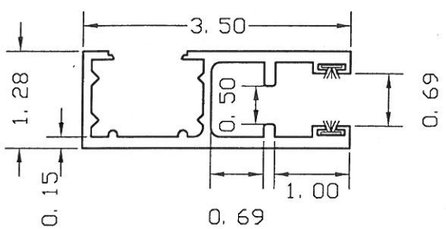

3- RETENTION SCREW
#12X3" STAINLESS STEEL
HEX HEAD SELF DRILLING
SCREW

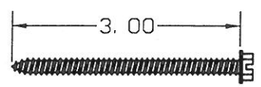

4- NYLON SLAT LOCK

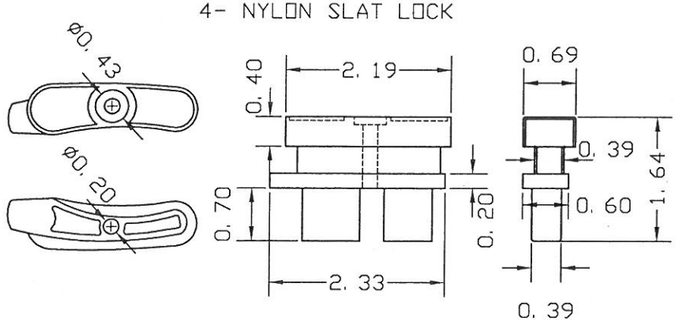

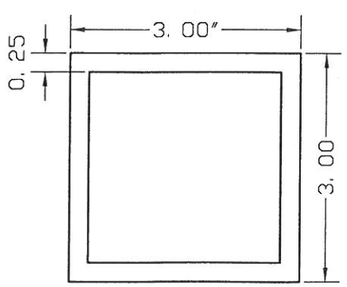

5- 1/4-3x3
ALUMINUM TUBE
6061-T6 ALUMINUM

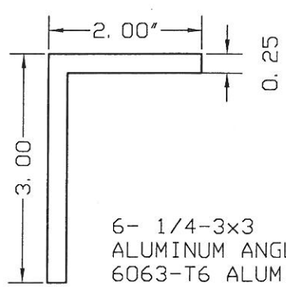

6- 1/4-3x3
ALUMINUM ANGLE
6063-T6 ALUMINUM

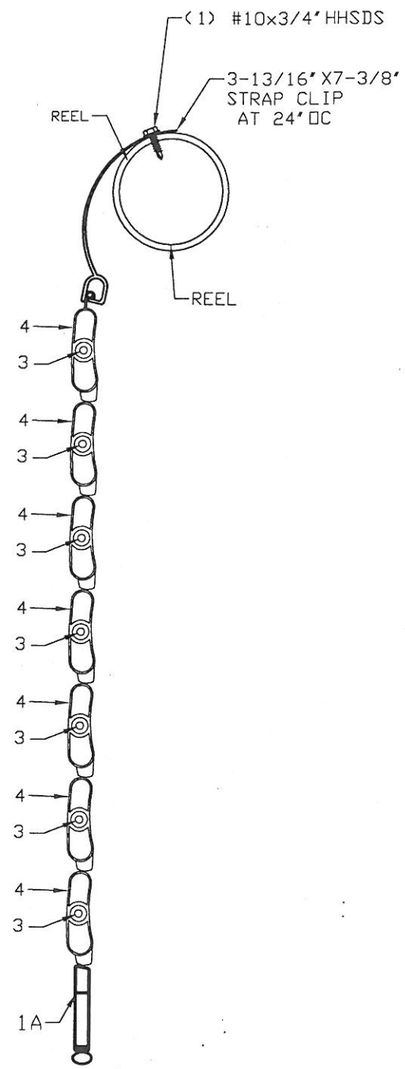

SLAT END RETENTION LAY-OUT

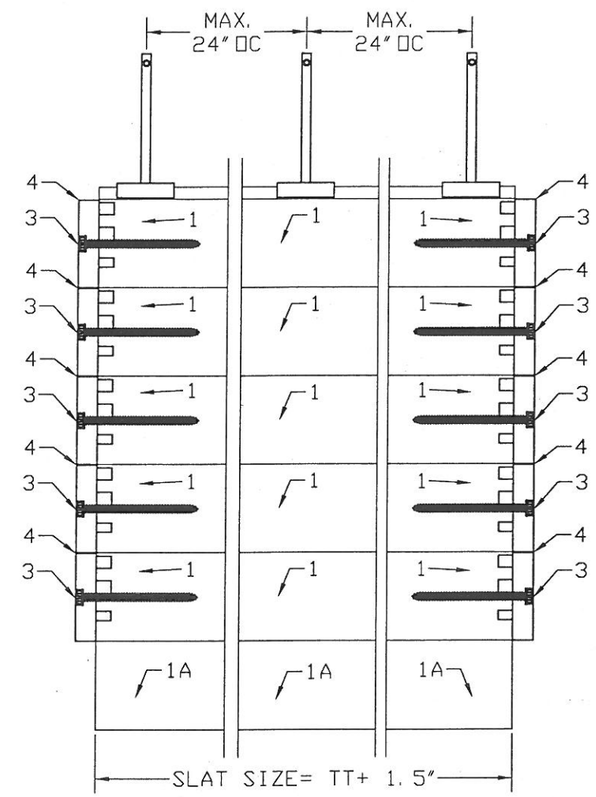

SLAT - TRACK DETAIL

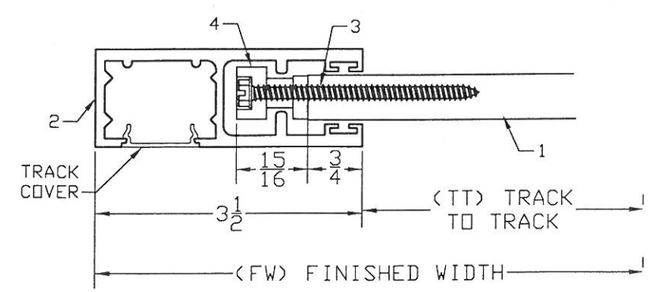

ATLANTIC
METAL
EXTRUSION, LLC

1002 LEXINGTON RD. S22-135
GEORGETOWN, KY 40324
Ph.: (859) 227-1320

PRODUCT:
Impact Resistant Rolling Door
LARGE & SMALL MISSILE
IMPACT RATED

Engineering:
EngCo Inc.
CR 11234
6971 W. Sunrise Blvd. 104
Plantation, Fl. 33313
ENGCO@AOL.COM

MAR 0 3 2010

Engineer Seal
Pedro De Figueiredo
TEXAS - PE 102937

DRAFTING:
PK DRAFTING & MORE

Date: 03/03/2010
Scale: NA
Design by: PPMF

Drawing Number
10-045

SHEET
10 of 11

HOUSING ASSEMBLY

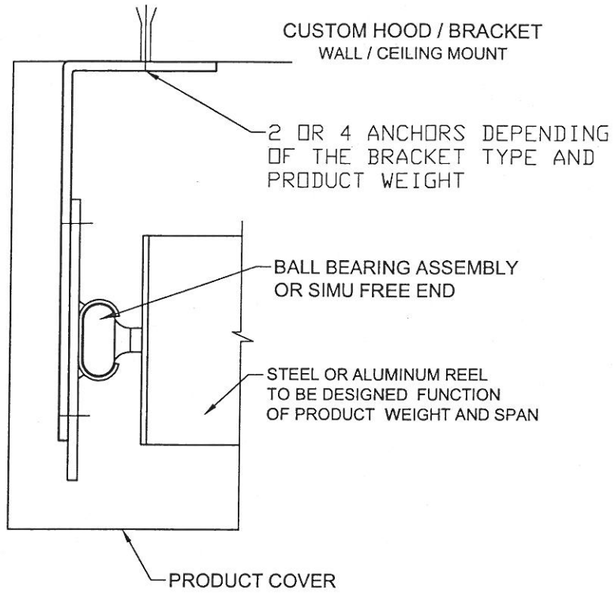

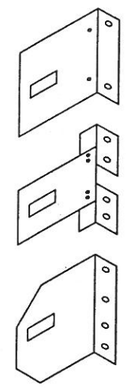

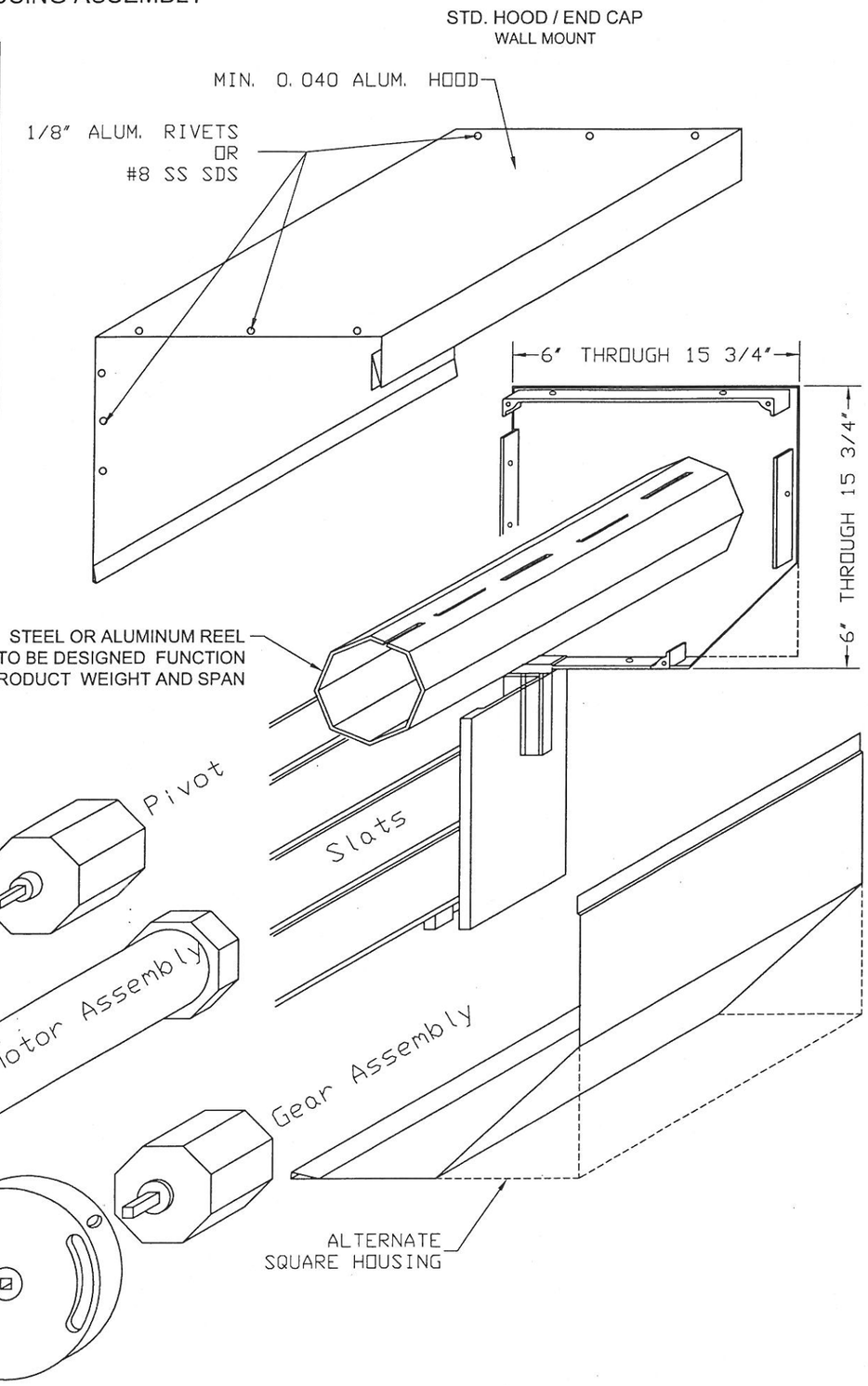

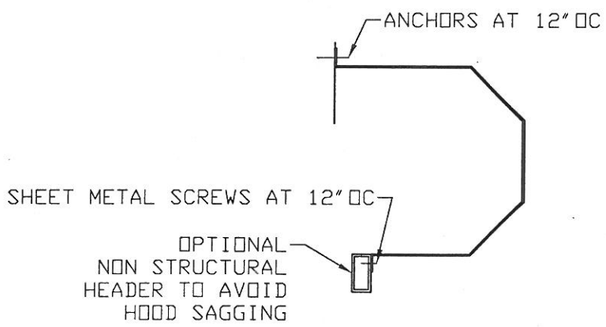

NOTE: THE ROLL-UP MECHANISM (GEARS, MOTORS, SUPPORTING END PLATES) ARE NOT PART OF THIS APPROVAL. MANUFACTURER IS RESPONSIBLE TO SPECIFY THESE COMPONENTS FOR PROPER PRODUCT OPERATION.

ATLANTIC METAL EXTRUSION, LLC
1002 LEXINGTON RD. S22-135
GEORGETOWN, KY 40324
Ph.: (859) 227-1320

PRODUCT:
Impact Resistant Rolling Door
LARGE & SMALL MISSILE IMPACT RATED

Engineering:
EngCo Inc.
CR 11234
6971 W. Sunrise Blvd. 104
Plantation, Fl. 33313
ENGCO@AOL.COM

MAR 03 2010

Engineer Seal
Pedro De Figueiredo
TEXAS - PE 102937

DRAFTING:
PK DRAFTING & MORE

Date: 03/03/2010
Scale: NA
Design by: PPMF

Drawing Number
10-045

SHEET
11 of 11