GENERAL NOTES:

1. ROLL-UP SHUTTER SHOWN ON THIS PRODUCT EVALUATION DOCUMENT (P.E.D.) HAS BEEN VERIFIED FOR COMPLIANCE IN ACCORDANCE WITH THE 2006 EDITIONS OF THE INTERNATIONAL BUILDING CODE, (I.B.C.) AND INTERNATIONAL RESIDENTIAL CODE, (I.R.C.) WITH THE 2006 TEXAS REVISIONS, EFFECTIVE JANUARY 1, 2008.
   THIS ROLL-UP SHUTTER SHALL BE INSTALLED AT AT SEAWARD AND INLAND AREAS, AS DEFINED BY THE TEXAS DEPARTMENT OF INSURANCE.
   DESIGN WIND LOADS SHALL BE DETERMINED AS PER SECTION 1609 OF THE OF THE INTERNATIONAL BUILDING CODE, FOR A BASIC WIND SPEED AS REQUIRED BY THE JURISDICTION WHERE SHUTTER WILL BE INSTALLED, AND FOR A DIRECTIONALITY FACTOR KD=0.85, IN ACCORDANCE W/ ASCE 7-05 STANDARD IN ORDER TO VERIFY THAT COMPONENTS AND ANCHORS ON THIS P.E.D. AS TESTED WERE NOT OVER STRESSED, A 33% INCREASE IN ALLOWABLE STRESS FOR WIND LOADS WAS NOT USED IN THEIR ANALYSIS. FASTENERS SPACING TO WOOD HAS BEEN DETERMINED IN ACCORDANCE WITH N.D.S. 2005.
   ROLL-UP SHUTTER ADEQUACY FOR IMPACT AND CYCLIC RESISTANCE HAS BEEN VERIFIED IN ACCORDANCE WITH SECTIONS 1609.1.2 AND R301.1.3 OF THE INTERNATIONAL AND RESIDENTIAL BUILDING CODE, RESPECTIVELY, AS PER FENESTRATION TESTING LAB. REPORTS # 5846 & 5905 AS PER ASTM E 1886-05, E 1996-05 AND E 330-02 STANDARDS, QUALIFYING INSTALLATIONS FOR WIND ZONES 1, 2, 3 & 4, MISSILE TYPE D, APPLICABLE TO BASIC PROTECTION ONLY, INSTALLATIONS AT NON ESSENTIAL FACILITIES AS DEFINED BY SECTIONS 6.2.1.1, 6.2.1.2 AND 8.3 OF ASTM E 1996-05. SEE *, Δ NOTES ON SHEETS 12 & 16 FOR ADDITIONAL LIMITATIONS.

2. ALL ALUMINUM EXTRUSIONS SHALL BE AS INDICATED ON SHEET 2

3. EVERY OTHER SLAT SHALL INCLUDE WIND LOCKS AT EACH END (SEE COMPONENTS SHEET). EVERY SLAT (A) ADJACENT AND ABOVE BOTTOM SLAT (A1) MUST INCLUDE WIND LOCKS.

4. ALL SCREWS & BOLTS (EXCEPT COMPONENT (C1)) INSTALLED AT SEAWARD AREAS TO BE STAINLESS STEEL 304 OR 316 AISI SERIES AND MEET ASTM A167, OR HOT DIPPED GALVANIZED (AFTER FABRICATION) CARBON STEEL AS PER ASTM A123 OR ASTM A153, OR HOT DIPPED GALVANIZED OR GALVANNEALED (PRIOR TO FABRICATION) AND MEET ASTM A653 WITH 50 KSI YIELD STRENGTH AND 90 KSI TENSILE STRENGTH, PER 2006 TEXAS REVISIONS TO SECTION 1716.1.1 OF THE 2006 I.B.C. AND SECTION R325.1.1 OF THE 2006 I.R.C.

5. ALL SCREWS & BOLTS (EXCEPT COMPONENT (C1)) INSTALLED AT INLAND I AREAS TO BE STAINLESS STEEL 304 OR 316 AISI SERIES AND MEET ASTM A167, OR HOT DIPPED GALVANIZED (AFTER FABRICATION) CARBON STEEL AS PER ASTM A123 OR ASTM A153, OR HOT DIPPED GALVANIZED OR GALVANNEALED (PRIOR TO FABRICATION) AND MEET ASTM A653; HOT DIP GALVANIZED OR ELECTRO GALVANIZED PER ASTM A641, MECHANICALLY DEPOSITED ZINC COATINGS PER ASTM B695 OR ELECTRO DEPOSITED ZINC COATINGS PER ASTM B633, PER THE 2006 TEXAS REVISIONS TO SECTION 1716.1.2 OF THE 2006 I.B.C. AND TO SECTION R325.1.2 OF THE 2006 I.R.C.

6. ANCHORS TO WALL FOR (B1), (B2), (B3) & (B4) SIDE RAILS SHALL BE AS FOLLOWS: (UNLESS OTHERWISE NOTED)

   (A) TO EXISTING POURED CONCRETE: MIN. f'c = 2899 p.s.i. COMPRESSIVE STRENGTH.

   -5/16"ø CARBON STEEL TAPCON XL ANCHORS AS MANUFACTURED BY ITW BUILDEX, INC.

   A.1) MINIMUM EMBEDMENT OF TAPCON XL ANCHORS INTO POURED CONCRETE SHALL BE 2 1/4". NO EMBEDMENT INTO STUCCO SHALL BE CONSIDERED AS PART OF THE REQUIRED EMBEDMENT.

   A.2) MINIMUM EDGE DISTANCE (E.D.) OF TAPCON XL ANCHORS INTO POURED CONCRETE SHALL BE 4". EDGE DISTANCE IS BEYOND ANY FINISH MATERIAL.

   A.3) IN CASE THAT PRECAST STONE, PRECAST CONCRETE OR BRICK PANELS, VENEER OR PAVERS BE FOUND ON THE EXISTING WALL, ANCHORS SHALL BE LONG ENOUGH TO REACH THE MAIN SUBSTRATE BEHIND SUCH PANELS. MINIMUM EMBEDMENT SHALL BE AS INDICATED ON NOTE A.1 ABOVE.

   (B) TO EXISTING GROUT FILLED CELL CONCRETE BLOCK WALL: ASTM C-90

   -5/16"ø CARBON STEEL TAPCON XL ANCHORS, AS MANUFACTURED BY ITW BUILDEX, INC.

   B.1) MINIMUM EMBEDMENT OF TAPCON XL ANCHORS, INTO THE GROUT FILLED CELL CONCRETE BLOCK UNIT SHALL BE 2 1/4". NO EMBEDMENT INTO STUCCO SHALL BE CONSIDERED AS PART OF THE REQUIRED EMBEDMENT.

   B.2) MINIMUM EDGE DISTANCE (E.D.) OF TAPCON XL ANCHORS INTO GROUT FILLED CELL CONCRETE BLOCK SHALL BE 4". EDGE DISTANCE IS BEYOND ANY FINISH MATERIAL.

   B.3) IN CASE THAT PRECAST STONE, PRECAST CONCRETE OR BRICK PANELS, VENEER OR PAVERS BE FOUND ON THE EXISTING WALL, ANCHORS SHALL BE LONG ENOUGH TO REACH THE MAIN SUBSTRATE BEHIND SUCH PANELS. MINIMUM EMBEDMENT SHALL BE AS INDICATED ON NOTE B.1 ABOVE.

   (C) TO EXISTING WOOD FRAME BUILDING: SOUTHERN PINE #2 W/ G=0.55 MIN., DOUGLAS FIR-SOUTH (G=0.46) OR SPRUCE PINE-FIR SOUTH, (G=0.36).

   -5/16"ø CARBON STEEL ULTRACON ANCHORS, AS MANUFACTURED BY ELCO CONSTRUCTION PRODUCTS.

   C.1) MINIMUM PENETRATION OF ULTRACON ANCHORS, INTO THE WOOD FRAME UNIT SHALL BE 2 1/2". (MUST INCLUDE 2" THREADED LENGTH) NO PENETRATION INTO STUCCO SHALL BE CONSIDERED AS PART OF THE REQUIRED PENETRATION.

   C.2) MINIMUM EDGE DISTANCE OF ULTRACON ANCHORS, INTO WOOD SHALL BE 2". EDGE DISTANCE IS BEYOND ANY FINISH MATERIAL.

   C.3) IN CASE THAT PRECAST STONE, PRECAST CONCRETE OR BRICK PANELS, VENEER OR PAVERS BE FOUND ON THE EXISTING WALL, ANCHORS SHALL BE LONG ENOUGH TO REACH THE MAIN SUBSTRATE BEHIND SUCH PANELS. MINIMUM THREADED PENETRATION SHALL BE AS INDICATED ON NOTE C.1 ABOVE.

7. ANCHORS SHALL BE INSTALLED FOLLOWING ALL OF THE RECOMMENDATIONS AND SPECIFICATIONS OF THE ANCHOR'S MANUFACTURER.

8. ANCHORS REQUIRED FOR MULLION CONNECTIONS SHALL BE AS SPECIFIED ON APPLICABLE SECTIONS SHOWN ON SHEETS 13 & 14 RESPECTIVELY.

   -1/2"ø & 5/8" KWIK BOLT TZ EXPANSION ANCHOR TO BE AS MANUFACTURED BY HILTI, INC.

   MINIMUM EDGE DISTANCE AND SPACING FOR ABOVE MENTIONED ANCHORS SHALL BE AS INDICATED BELOW OR AT ABOVE MENTIONED SHEET. EDGE DISTANCE AND EMBEDMENTS ARE BEYOND ANY FINISH MATERIAL.

ANCHOR	SPACING @ 100%	EDGE DISTANCE @ 100%	EMBEDMENT	
			CONCRETE	GROUT FILLED OR CONCRETE BLOCK
1/2"	22 1/2"	7 1/2"	4" (3000 psi)	–
5/8"	20 1/4"	6 3/4"	6 3/4" (3000 psi)	–

9. APEX A-55 SLATS FOAM PLASTIC CORE SHALL CONSIST OF 100/100 PARTS BY WEIGHT OF ELASTOPOR R P 12041 R (1.06 SPACIFIC GRAVITY) RESIN + ELASTOPOR R P1001 U (1.22 SPECIFIC GRAVITY) ISOCYANATE, AS MANUFACTURED BY BASF CORPORATION, 1609 BIDDLE AVE., WYANDOTTE, MI 48192.
   SLATS FOAM PLASTIC CORE SURFACE BURNING CHARACTERISTICS HAVE BEEN VERIFIED IN ACCORDANCE WITH SECTION 2612.3 OF THE FLORIDA BUILDING CODE AS PER CELOTEX CORPORATION TEST REPORT #520274A & 520536 RESPECTIVELY.

10. IT SHALL BE THE RESPONSIBILITY OF THE CONTRACTOR TO VERIFY THE SOUNDNESS OF THE STRUCTURE WHERE SHUTTER IS TO BE ATTACHED TO INSURE PROPER ANCHORAGE. THIS SHUTTER SHALL ONLY BE ATTACHED TO CONCRETE, GROUT FILLED CELL CONCRETE BLOCK OR WOOD FRAME BUILDINGS.

11. ROLL-UP MECHANISM NOT PART OF THIS APPROVAL, BUT SHALL BE CERTIFIED BY AN INDEPENDENT TESTING AGENCY.

12. ROLL-UP SHUTTERS INSTALLATION SHALL COMPLY WITH SPECS INDICATED IN THIS DRAWING PLUS ANY BUILDING AND ZONING REGULATIONS PROVIDED BY THE JURISDICTION WHERE PERMIT IS APPLIED TO.

13. THE INSTALLATION CONTRACTOR IS TO SEAL/CAULK ALL SHUTTER COMPONENT EDGES WHICH REMAIN IN CONTINUOUS CONTACT WITH THE BUILDING TO PREVENT WIND/RAIN INTRUSION. CAULK AND SEAL SHUTTER TRACKS ALL AROUND FUL LENGTH.

14. (a) THIS P.E.D. PREPARED BY THIS ENGINEER IS GENERIC AND DOES NOT PROVIDE INFORMATION FOR A SITE SPECIFIC PROJECT; i.e. WHERE THE SITE CONDITIONS DEVIATE FROM THE P.E.D.

    (b) CONTRACTOR TO BE RESPONSIBLE FOR THE SELECTION, PURCHASE AND INSTALLATION INCLUDING LIFE SAFETY OF THIS PRODUCT, BASED ON THIS P.E.D. PROVIDED HE/SHE DOES NOT DEVIATE FROM THE CONDITIONS DETAILED ON THIS DOCUMENT. CONSTRUCTION SAFETY AT SITE IS THE CONTRACTOR'S RESPONSIBILITY.

    (c) THIS P.E.D. WILL BE CONSIDERED INVALID IF ALTERED BY ANY MEANS.

    (d) SITE SPECIFIC PROJECTS SHALL BE PREPARED BY A PROFESSIONAL ENGINEER OR ARCHITECT WHICH WILL BECOME THE ENGINEER OF RECORD (E.O.R.) FOR THE PROJECT AND WHO WILL BE RESPONSIBLE FOR THE PROPER USE OF THE P.E.D. ENGINEER OF RECORD, ACTING AS A DELEGATED ENGINEER TO THE P.E.D. ENGINEER, SHALL SUBMIT TO THIS LATTER THE SITE SPECIFIC DRAWINGS FOR REVIEW.

    (e) THIS P.E.D. SHALL BEAR THE DATE AND ORIGINAL SEAL AND SIGNATURE OF THE PROFESSIONAL ENGINEER OF RECORD THAT PREPARED IT.

15. SHUTTER MANUFACTURER'S LABEL SHALL BE LOCATED ON A READILY VISIBLE LOCATION AT ROLL-UP SHUTTER. ONE LABEL SHALL BE PLACED FOR EVERY OPENING. LABELING SHALL INDICATE MANUFACTURER'S NAME, PRODUCT NAME & ASTM E-330, E-1886, E-1996 COMPLIANT.

STATE OF TEXAS
12/4/12

TEXAS DEPARTMENT OF INSURANCE – 2006

WALTER A. TILLIT Jr. P.E.
PROFESSIONAL ENGINEER
6355 N.W. 36TH. ST., STE. 305
VIRGINIA GARDENS, FL 33166
PHONE : (305) 871-1530 , FAX : (305) 871-1531
TEXAS LIC. # 90691
FIRM REGISTRATION # F-13790

APEX A-55 SLAT ENGAGED ROLL-UP SHUTTER

ROLLAC SHUTTER OF TEXAS, INC.
5331 ORANGE STREET
PEARLAND, TX. 77581
PHONE: (800)880-0922 FAX: (281)485-0839

REV. No	DESCRIPTION	DATE	REV. No	DESCRIPTION	DATE
1	OLD 09-056	11/29/12	3		
2			4		

DRAWN BY: I.A./A.G

11/29/12 DATE

12-173 DRAWING No

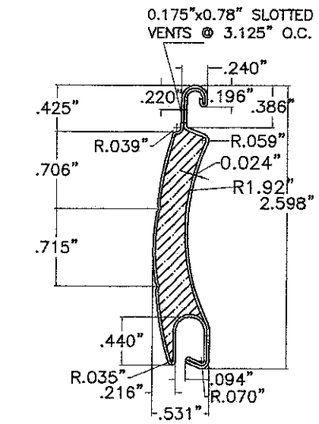

(A) SLAT:

APEX A-55 SLAT
HIGH DENSITY FOAM PLASTIC CORE
SHEET METAL ALUMINUM SLAT
3005-H28 ALUMINUM ALLOY
(Ftu = 29.5 ksi, Fy = 25.7 ksi, AFTER ROLLED)
SCALE: 3/4" = 1"

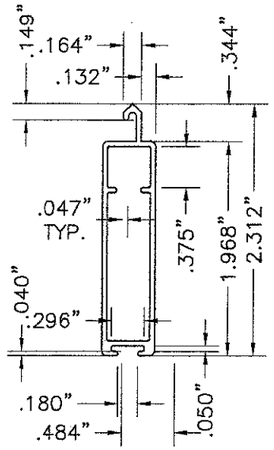

(A1) BOTTOM SLAT:

6063-T6 ALUMINUM ALLOY
SCALE: 3/4" = 1"

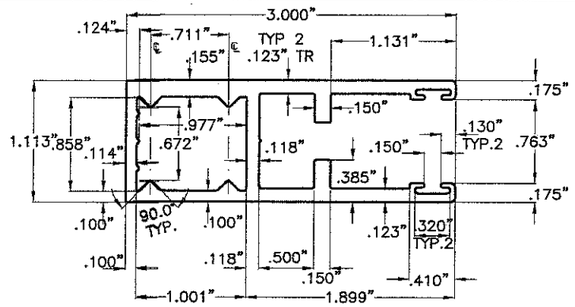

(B1) TYPE 1 SIDE RAIL

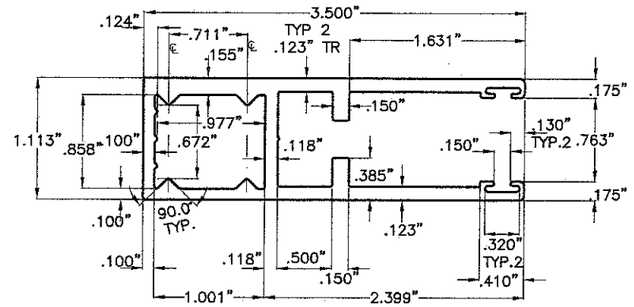

(B3) TYPE 3 SIDE RAIL

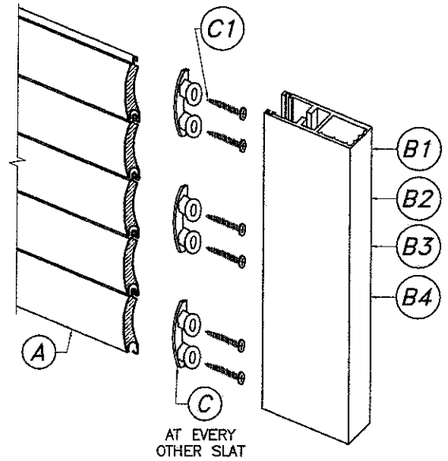

APEX A-55 SLAT ASSEMBLY DETAIL:

N.T.S.

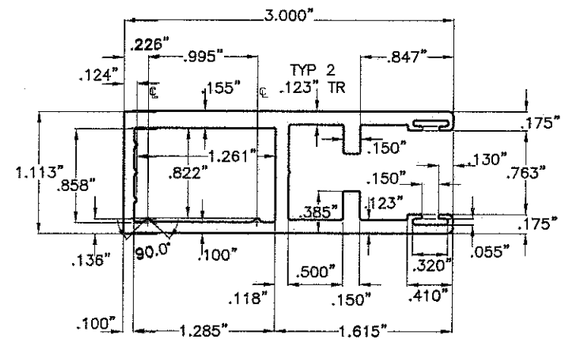

(B2) TYPE 2 SIDE RAIL

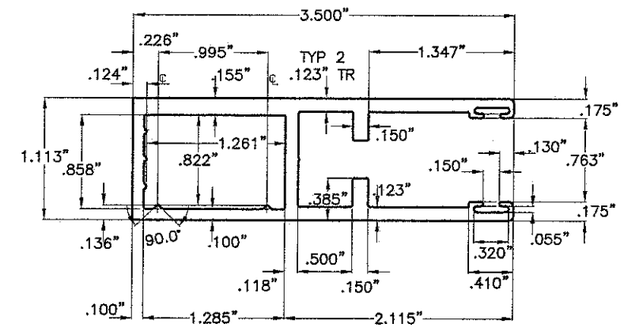

(B4) TYPE 4 SIDE RAIL

SIDE RAILS:

6005-T5 ALUMINUM ALLOY
SCALE: 3/4" = 1"

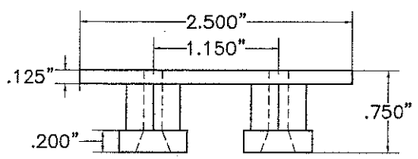

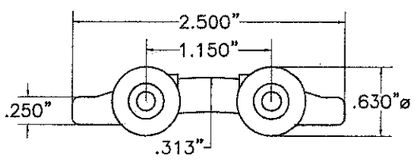

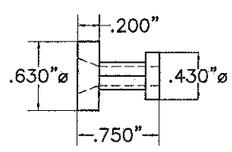

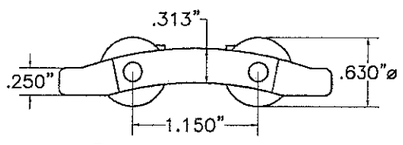

(C) WIND LOCK:

RIGID NYLON Ftu = 5001 psi.
SCALE: 3/4" = 1"

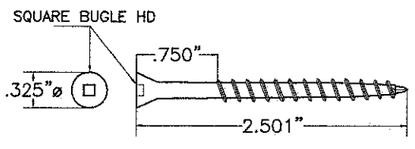

(C1) WIND LOCK SCREW:

(2) #8-10 X 2 1/2" AISI 305 SERIES F.H. S.S. S.D.S.
(MIN. Fy = 72.8 ksi, Ftu = 83.1 ksi)
SCALE: 3/4" = 1"

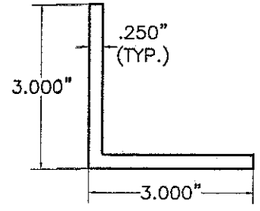

(D) ALUMINUM ANGLE

6063-T6 ALUMINUM ALLOY
SCALE: 3/8" = 1"

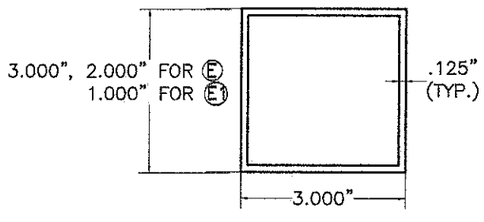

(E), (E1) ALUMINUM BUILD-OUT TUBES

6063-T6 ALUMINUM ALLOY
SCALE: 3/8" = 1"

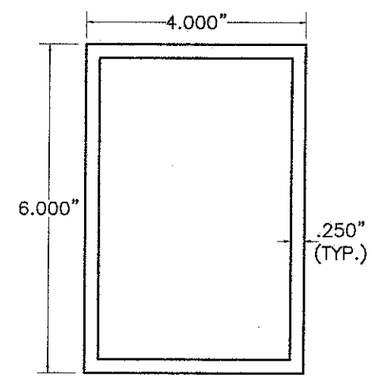

(F) TYPE 1 MULLION

6061-T6 ALUMINUM ALLOY
SCALE: 3/8" = 1"

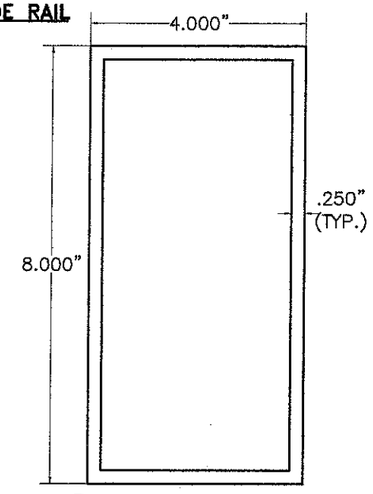

(G) TYPE 2 MULLION

6061-T6 ALUMINUM ALLOY
SCALE: 3/8" = 1"

TEXAS DEPARTMENT OF INSURANCE – 2006

WALTER A. TILLIT Jr. P.E.
PROFESSIONAL ENGINEER
6355 N.W. 36TH. ST., STE. 305
VIRGINIA GARDENS, FL. 33166
PHONE : (305) 871-1530 , FAX : (305) 871-1531
TEXAS LIC. # 90691
FIRM REGISTRATION # F-13790

STATE OF TEXAS
12/4/12

APEX A-55 SLAT ENGAGED ROLL-UP SHUTTER

ROLLAC SHUTTER OF TEXAS, INC.
5331 ORANGE STREET
PEARLAND, TX. 77581
PHONE: (800)880-0922 FAX: (281)485-0839

DRAWN BY: I.A./A.G
11/29/12 DATE
12-173 DRAWING No

REV. No	DESCRIPTION	DATE	REV. No	DESCRIPTION	DATE
1	OLD 09-056	11/29/12	3		
2			4		

SHEET 2 OF 17

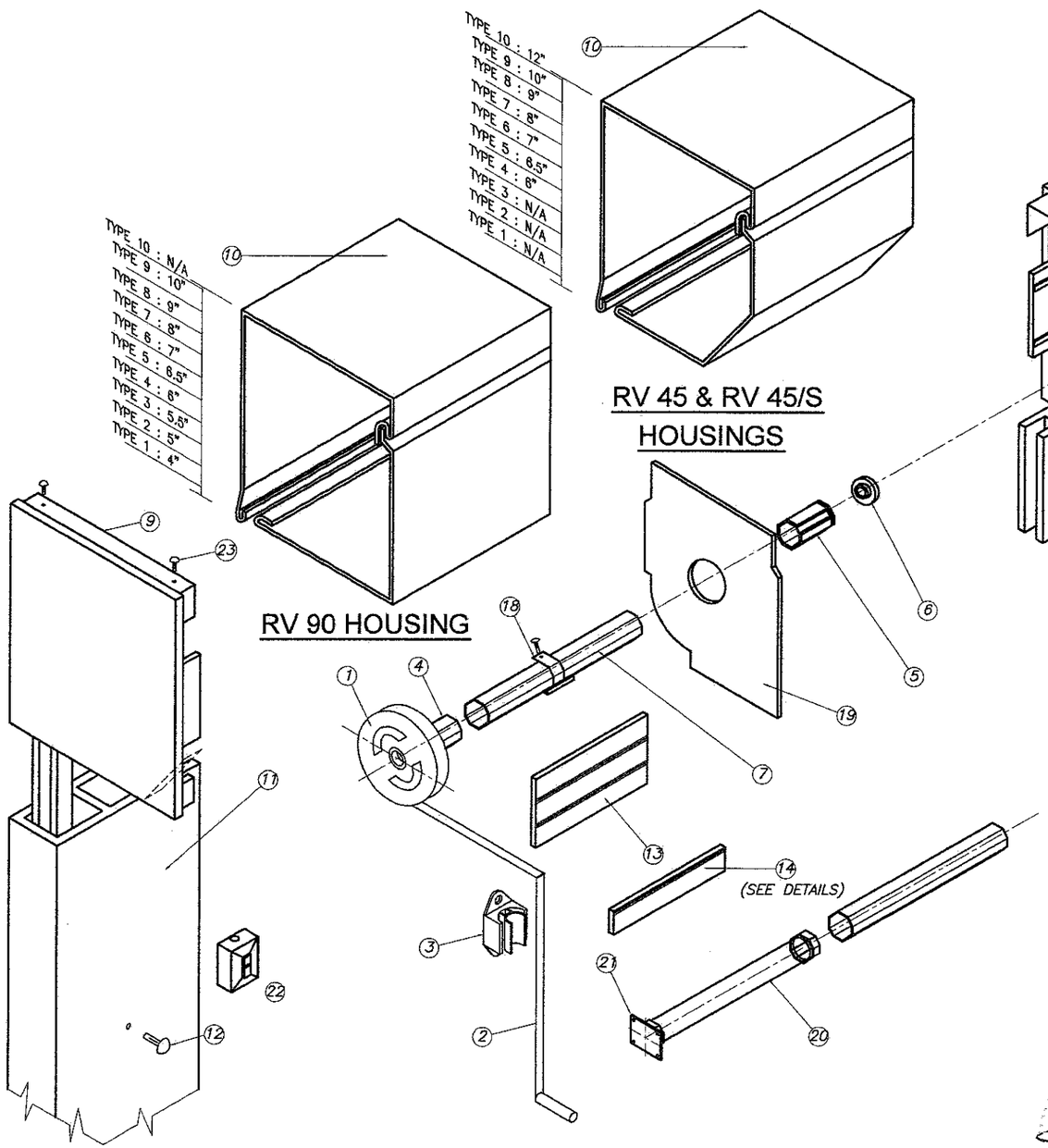

(H) BOX COMPONENTS AND ASSEMBLY DETAIL

END CAP SYSTEM

(SEE NOTE 11 ON SHEET 1)

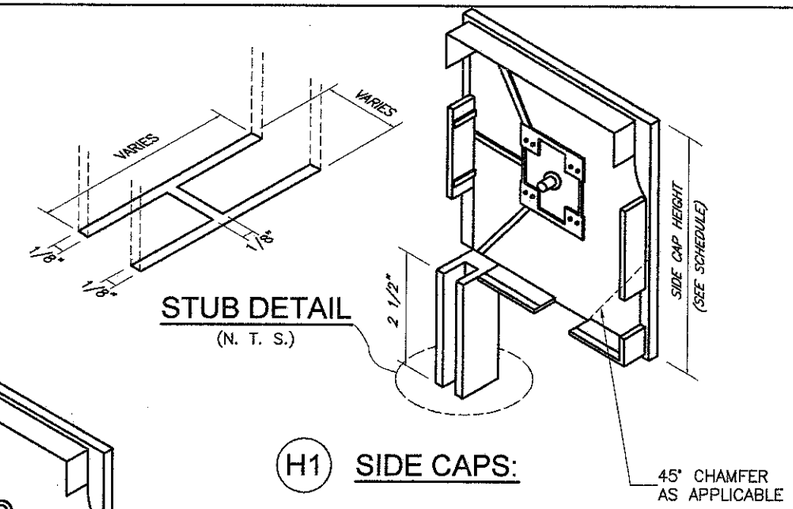

STUB DETAIL

(N. T. S.)

(H1) SIDE CAPS:

COMPONENTS FOR GEAR OPERATED SYSTEM

(1) – GEAR
(2) – UNIVERSAL & CRANK
(3) – CRANK HOLDER(OPTIONAL)
(4) – GEAR INSERT(GEAR TO AXLE CONNECTOR)
(5) – IDLER INSERT
(6) – BALL BEARING
(7) – OCTAGONAL AXLE *
(9) – SIDE/END CAP *
(10) – HOUSING(FRONT & BOTTOM), 0.040" THICK
(11) – SIDE RAIL
(12) – PLUG–BUTTOMS
(13) – ALUMINUM SLATS
(14) – BASE SLAT
(15) – PLASTIC STOPS(OPTIONAL)
(16) – SIDE LOCKS(OPTIONAL)
(17) – STAPLES(OPTIONAL)
(18) – SPRINGLOCK HANGER
(19) – SAFETY PLATES

ADDITIONAL COMPONENTS FOR MOTORIZED OPERATED SYSTEM

(20) – TUBULAR MOTOR
(21) – MOTOR BRACKET
(22) – SWITCH

FASTENERS

(23) – 3/16" ALUMINUM POP RIVETS(6 REQ'D EA. SIDE CAP) : 2 @ TOP, 2 @ REAR, 2@ BOTTOM

* SHALL BE CAPABLE TO SUSTAIN SLAT'S WEIGHT AND ASSURE LIFTING MECHANISM (SEE NOTE 11/1)

STATE OF TEXAS
12/4/12
LICENSED PROFESSIONAL ENGINEER

TEXAS DEPARTMENT OF INSURANCE – 2006

WALTER A. TILLIT Jr. P.E. PROFESSIONAL ENGINEER 6355 N.W. 36TH. ST., STE. 305 VIRGINIA GARDENS, FL. 33166 PHONE : (305) 871–1530 , FAX : (305) 871–1531 TEXAS LIC. # 90691 *FIRM REGISTRATION # F–13790*	APEX A-55 SLAT ENGAGED ROLL-UP SHUTTER ROLLAC SHUTTER OF TEXAS, INC. 5331 ORANGE STREET PEARLAND, TX. 77581 PHONE: (800)880–0922 FAX: (281)485–0839	DRAWN BY: I.A./A.G 11/29/12 DATE 12–173 DRAWING No SHEET 3 OF 17

REV. No	DESCRIPTION	DATE	REV. No	DESCRIPTION	DATE
1	OLD 09–056	11/29/12	3		
2			4		

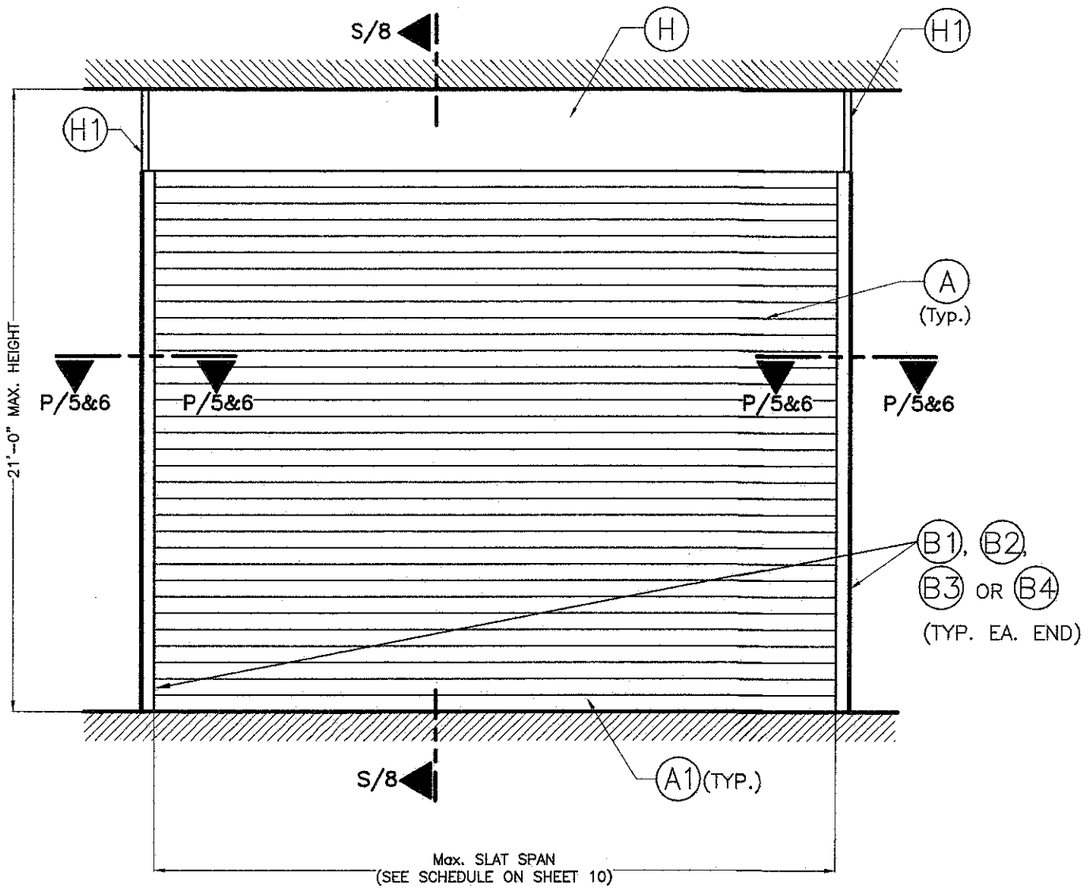

TYPICAL SINGLE UNIT ELEVATION: INSTALLATION INTO POURED CONCRETE, GROUT FILLED CELL CONCRETE BLOCK & WOOD

NOTES: SEE SHEETS 2 & 3 FOR COMPONENTS NOMENCLATURE.
N.T.S

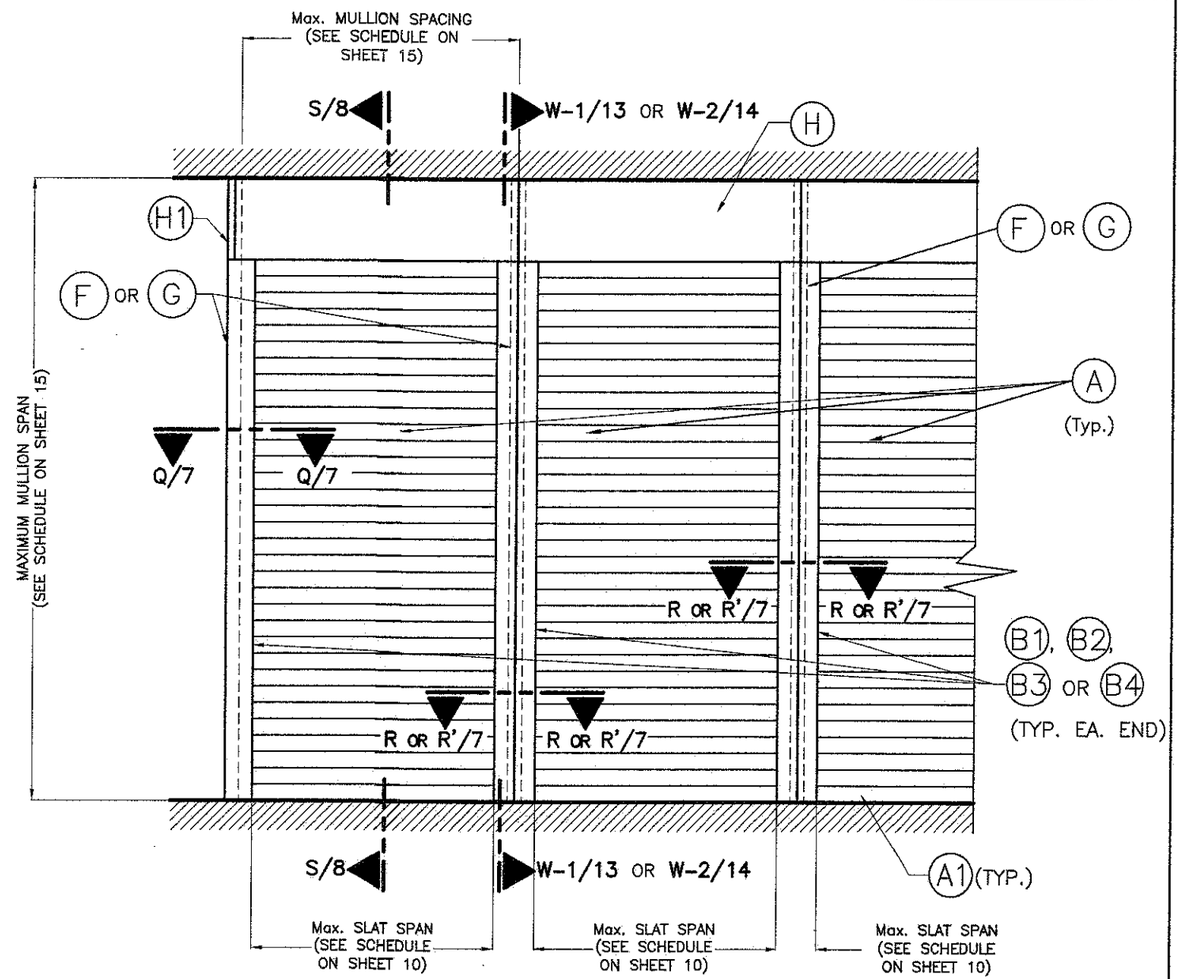

TYPICAL CONSECUTIVE SINGLE UNIT ELEVATION W/ MULLIONS: INSTALLATION INTO POURED CONCRETE

NOTES: SEE SHEETS 2 & 3 FOR COMPONENTS NOMENCLATURE.
N.T.S

STATE OF TEXAS
WALTER A. TILLIT, JR.
12/4/12
LICENSED
PROFESSIONAL ENGINEER

TEXAS DEPARTMENT OF INSURANCE – 2006

WALTER A. TILLIT Jr. P.E.
PROFESSIONAL ENGINEER
8355 N.W. 36TH. ST., STE. 305
VIRGINIA GARDENS, FL. 33166
PHONE : (305) 871-1530 , FAX : (305) 871-1531
TEXAS LIC. # 90691
FIRM REGISTRATION # F-13790

APEX A-55 SLAT ENGAGED ROLL-UP SHUTTER

ROLLAC SHUTTER OF TEXAS, INC.
5331 ORANGE STREET
PEARLAND, TX. 77581
PHONE: (800)880-0922 FAX: (281)485-0839

REV. No	DESCRIPTION	DATE	REV. No	DESCRIPTION	DATE
1	OLD 09-056	11/29/12	3		
2			4		

DRAWN BY: I.A./A.G

11/29/12 DATE

12-173 DRAWING No

SHEET 4 OF 17

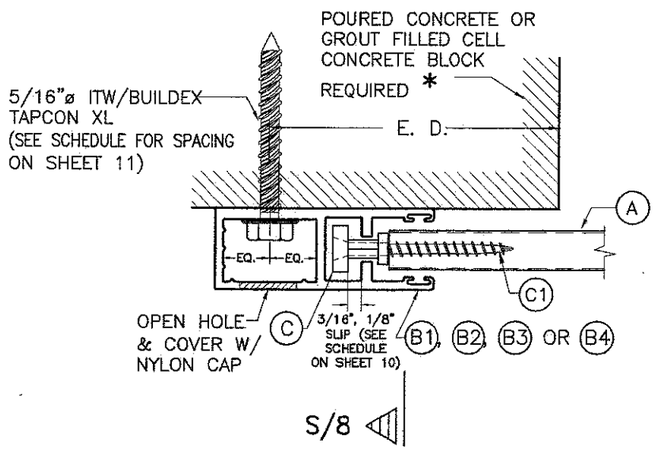

SECTION P – P (1) : WALL MOUNT

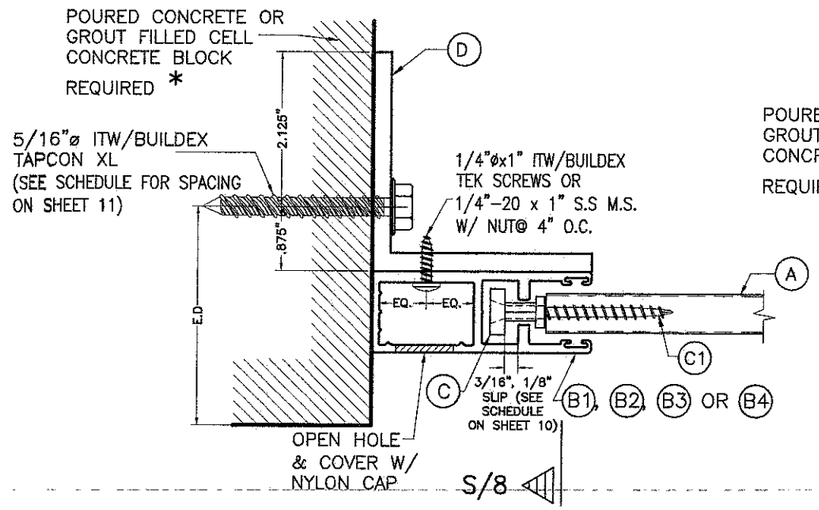

SECTION P – P (2) : INSIDE WALL MOUNT

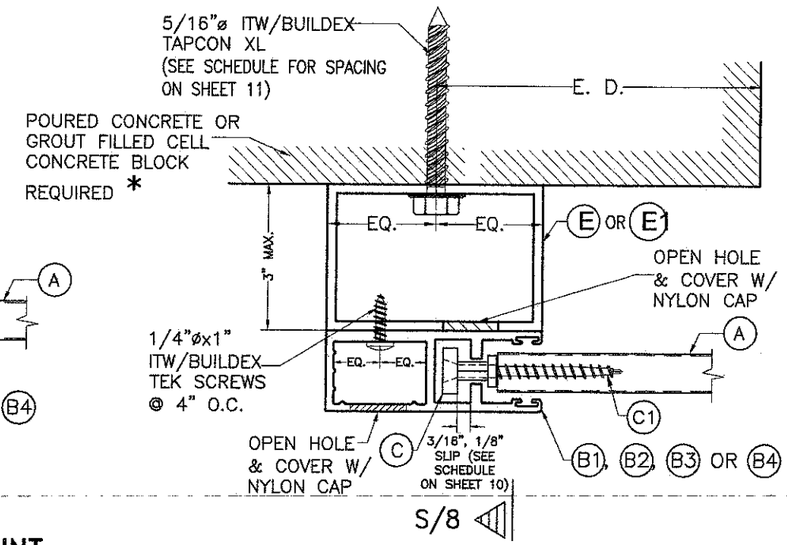

SECTION P – P (3) : BUILD-OUT MOUNT

SIDE RAIL CONNECTIONS TO POURED CONCRETE OR GROUT FILLED CELL CONCRETE BLOCK WALL

SCALE: 1/2" = 1"

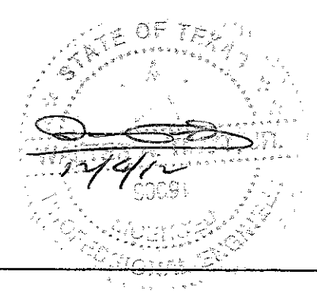

TEXAS DEPARTMENT OF INSURANCE – 2006

WALTER A. TILLIT Jr. P.E.
PROFESSIONAL ENGINEER
6355 N.W. 36TH. ST., STE. 305
VIRGINIA GARDENS, FL. 33166
PHONE : (305) 871-1530 , FAX : (305) 871-1531

TEXAS LIC. # 90691

FIRM REGISTRATION # F-13790

APEX A-55 SLAT ENGAGED ROLL-UP SHUTTER

ROLLAC SHUTTER OF TEXAS, INC.
5331 ORANGE STREET
PEARLAND, TX. 77581
PHONE: (800)880-0922 FAX: (281)485-0839

REV. No	DESCRIPTION	DATE	REV. No	DESCRIPTION	DATE
1	OLD 09-056	11/29/12	3		
2			4		

DRAWN BY: I.A./A.G

11/29/12 DATE

12-173 DRAWING No

SHEET 5 OF 17

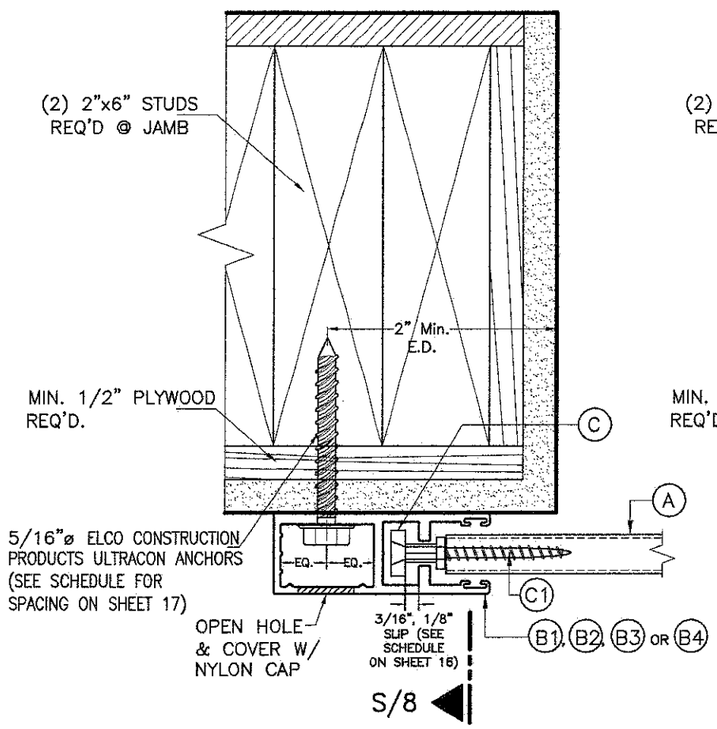

SECTION P–P (1):
WALL MOUNT

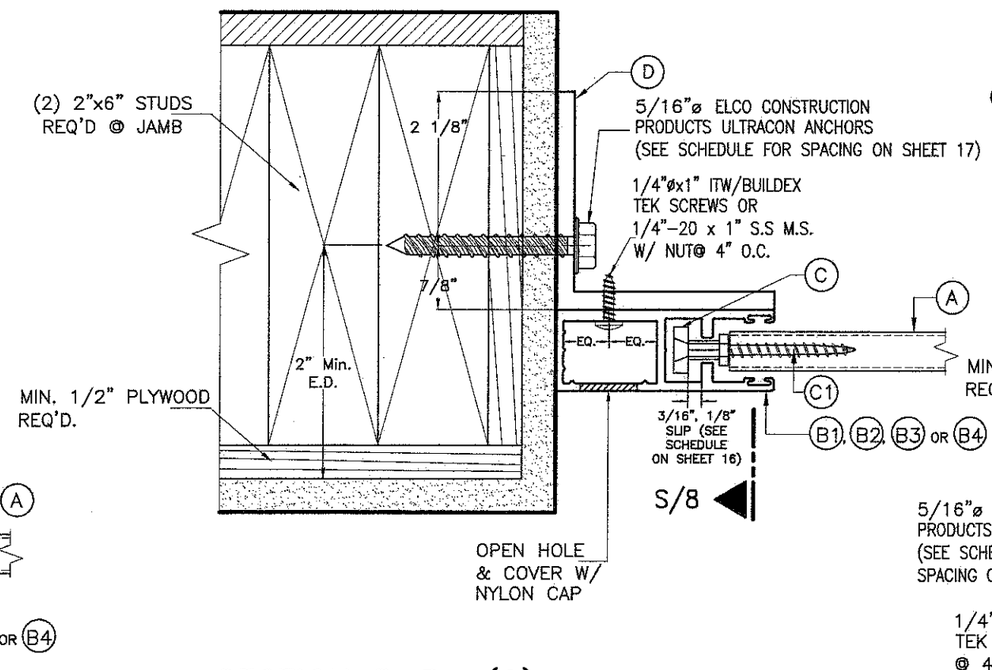

SECTION P–P (2):
INSIDE WALL MOUNT

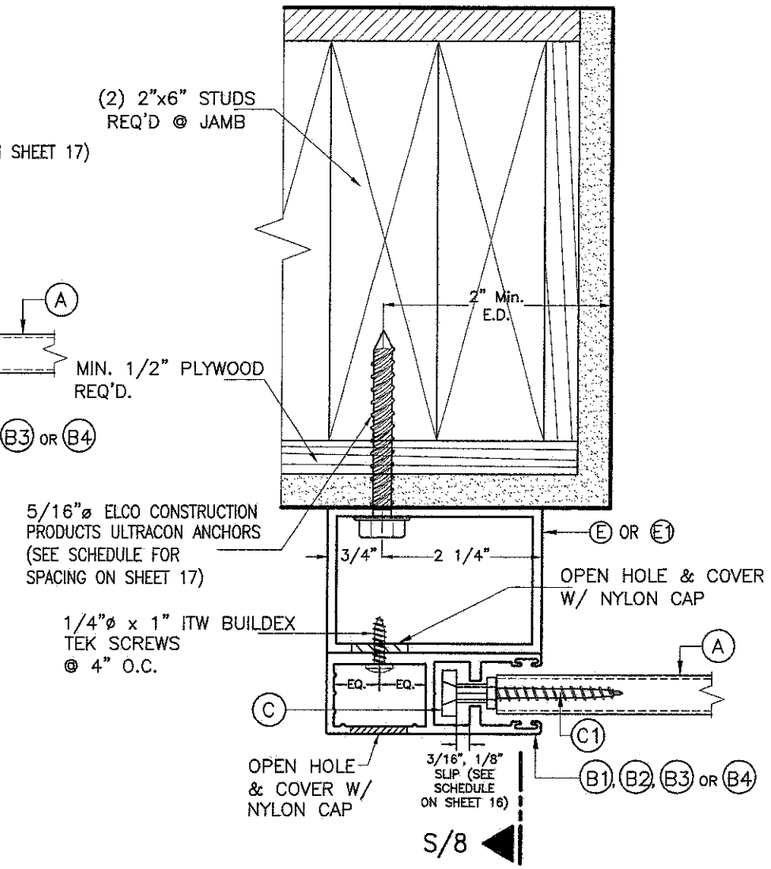

SECTION P–P (3):
BUILD–OUT MOUNT

SIDE RAIL CONNECTIONS TO WOOD WALL

SCALE: 1/2" = 1"

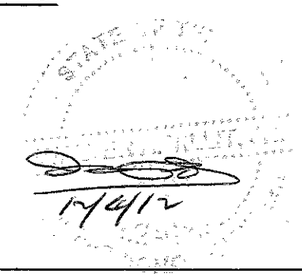

TEXAS DEPARTMENT OF INSURANCE – 2006

WALTER A. TILLIT Jr. P.E.
PROFESSIONAL ENGINEER
6355 N.W. 36TH. ST., STE. 305
VIRGINIA GARDENS, FL. 33166
PHONE : (305) 871–1530 , FAX : (305) 871–1531
TEXAS LIC. # 90691
FIRM REGISTRATION # F–13790

APEX A-55 SLAT ENGAGED ROLL-UP SHUTTER

ROLLAC SHUTTER OF TEXAS, INC.
5331 ORANGE STREET
PEARLAND, TX. 77581
PHONE: (800)880–0922 FAX: (281)485–0839

REV. No	DESCRIPTION	DATE	REV. No	DESCRIPTION	DATE
1	OLD 09–056	11/29/12	3		
2			4		

DRAWN BY: I.A./A.G
11/29/12 DATE
12–173 DRAWING No
SHEET 6 OF 17

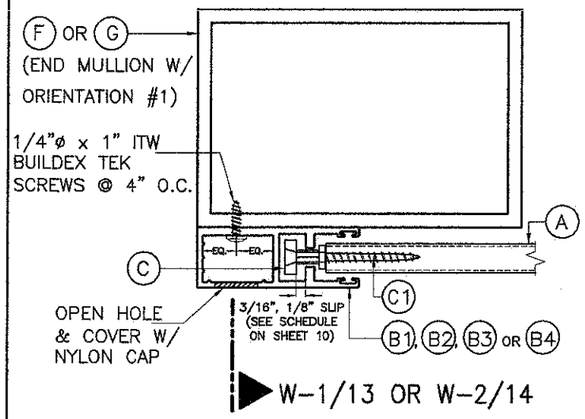

SECTION Q-Q:
MULLION MOUNT (FACE MOUNT)

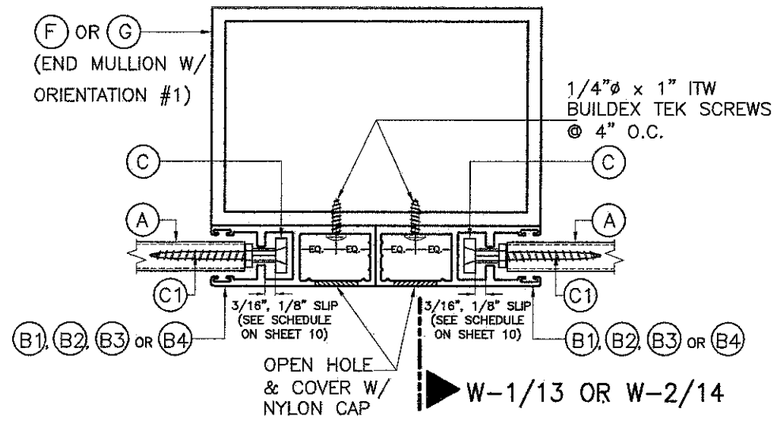

SECTION R-R:
MULLION MOUNT (FACE MOUNT)

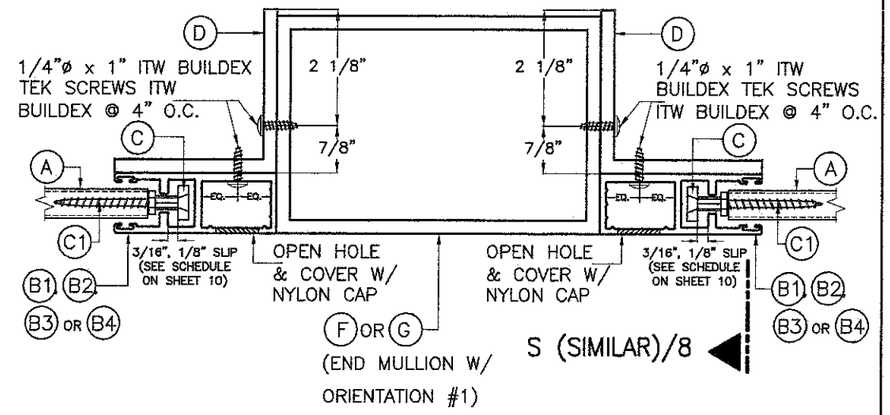

SECTION R'-R':
MULLION MOUNT (INSIDE MOUNT)

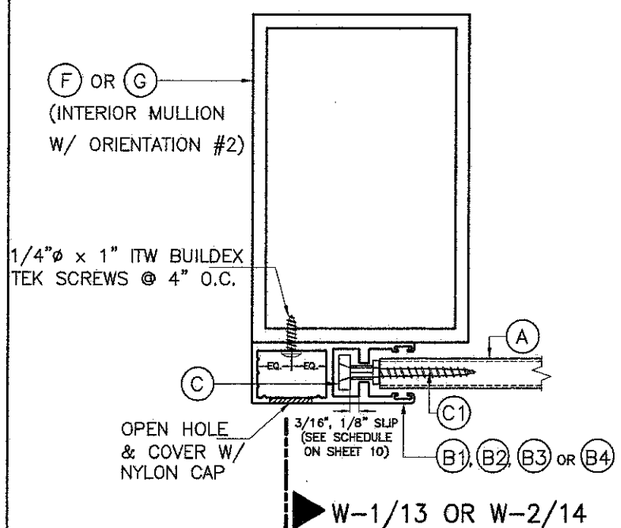

SECTION Q-Q:
MULLION MOUNT (FACE MOUNT)

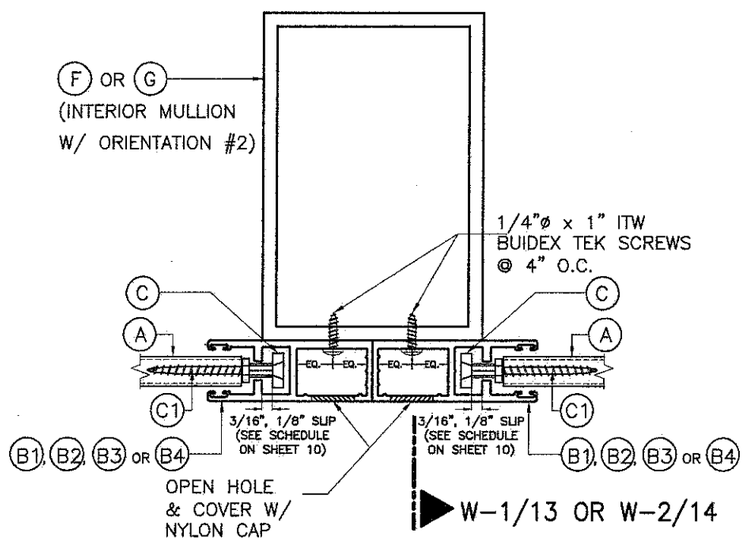

SECTION R-R:
MULLION MOUNT (FACE MOUNT)

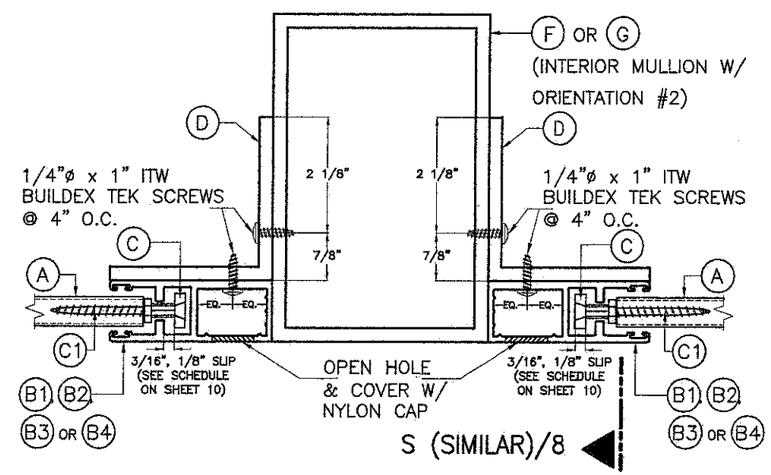

SECTION R'-R':
MULLION MOUNT (INSIDE MOUNT)

SIDE RAIL CONNECTION TO MULLIONS

SCALE: 3/8" = 1"

12/4/12

TEXAS DEPARTMENT OF INSURANCE - 2006

WALTER A. TILLIT Jr. P.E. PROFESSIONAL ENGINEER 6355 N.W. 36TH. ST., STE. 305 VIRGINIA GARDENS, FL. 33166 PHONE : (305) 871-1530 , FAX : (305) 871-1531 TEXAS LIC. # 90691 *FIRM REGISTRATION # F-13790*	APEX A-55 SLAT ENGAGED ROLL-UP SHUTTER ROLLAC SHUTTER OF TEXAS, INC. 5331 ORANGE STREET PEARLAND, TX. 77581 PHONE: (800)880-0922 FAX: (281)485-0839	DRAWN BY: I.A./A.G 11/29/12 DATE 12-173 DRAWING No SHEET 7 OF 17	

REV. No	DESCRIPTION	DATE	REV. No	DESCRIPTION	DATE
1	OLD 09-056	11/29/12	3		
2			4		

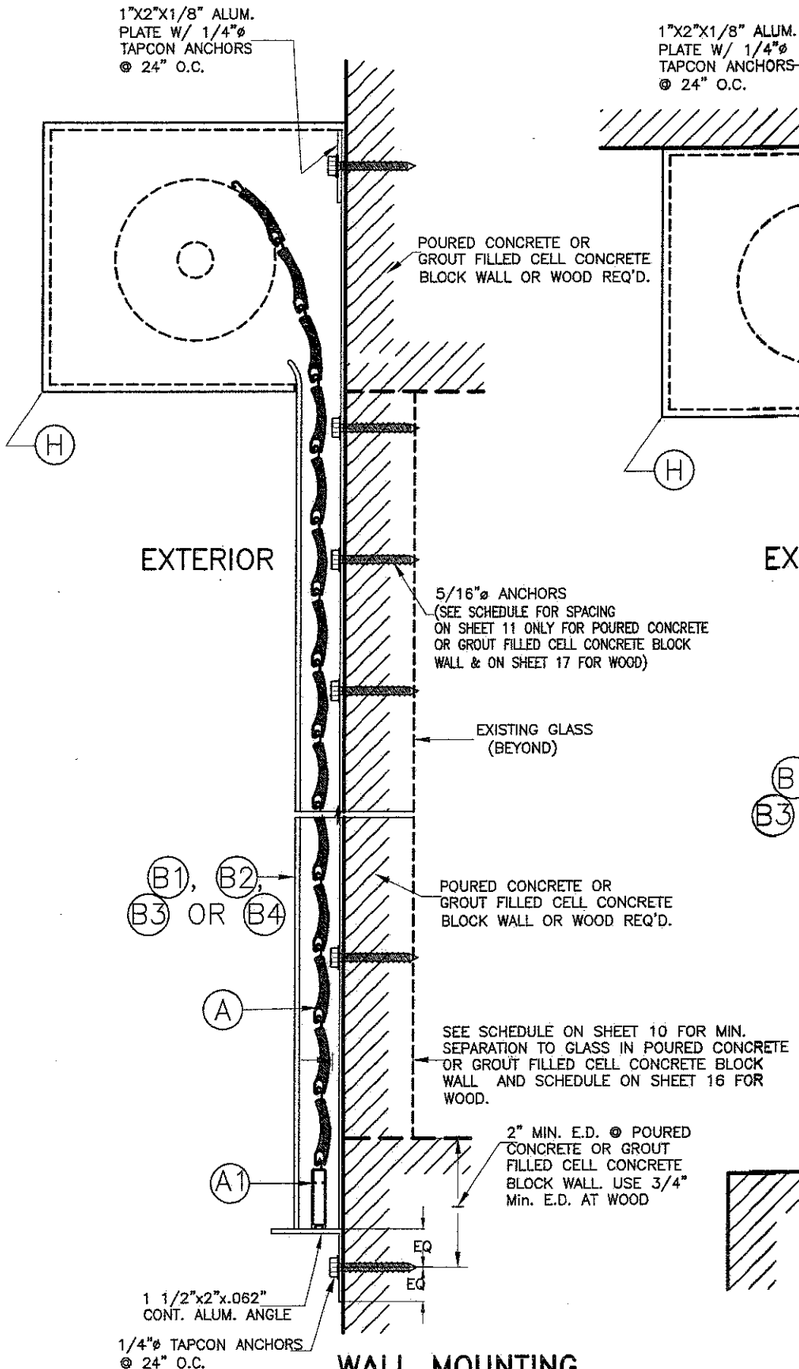

WALL MOUNTING

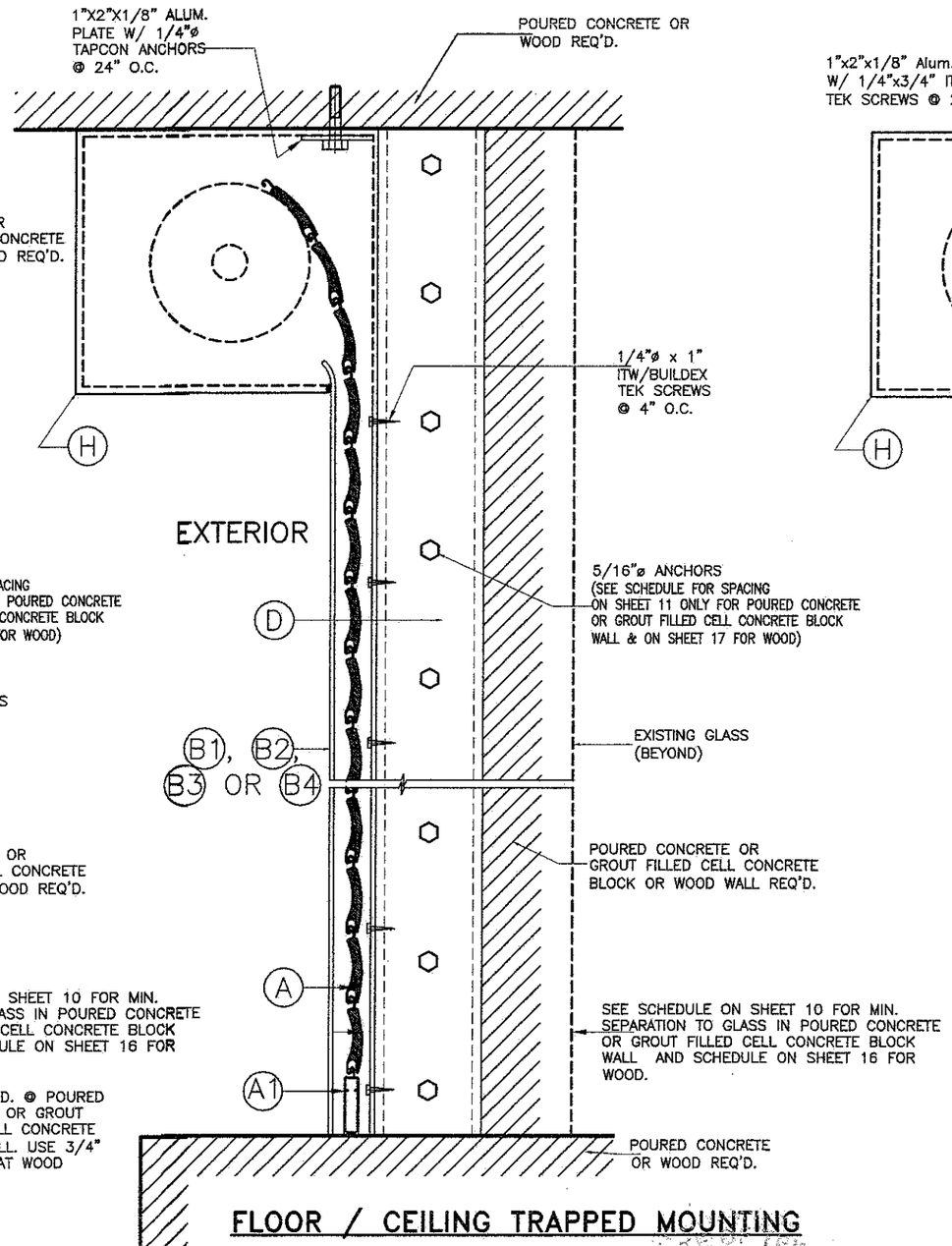

FLOOR / CEILING TRAPPED MOUNTING

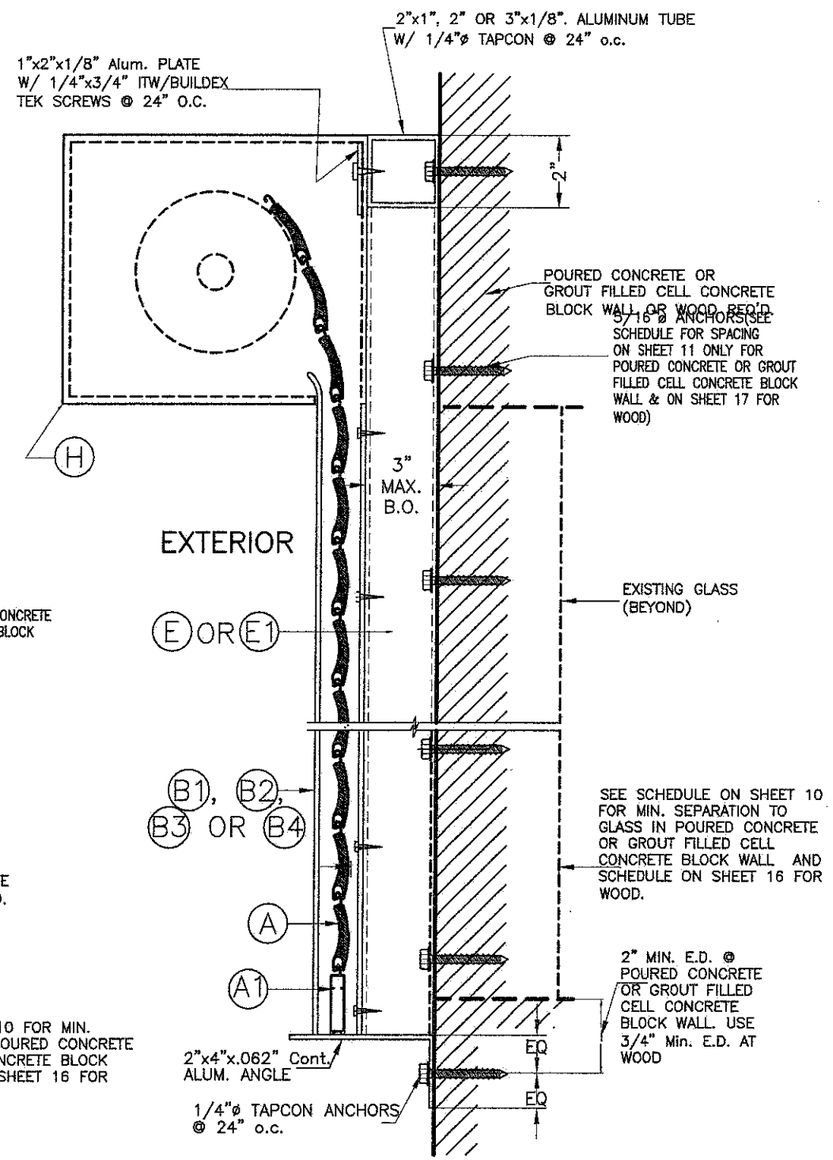

BUILD-OUT MOUNTING

SECTION S-S

N.T.S

INSTALLATION DETAILS ON EXISTING POURED CONCRETE OR GROUT FILLED CELL CONCRETE BLOCK WALL OR WOOD

TEXAS DEPARTMENT OF INSURANCE – 2006

WALTER A. TILLIT Jr. P.E.
PROFESSIONAL ENGINEER
6355 N.W. 36TH. ST., STE. 305
VIRGINIA GARDENS, FL. 33166
PHONE : (305) 871-1530 , FAX : (305) 871-1531
TEXAS LIC. # 90691
FIRM REGISTRATION # F-13790

APEX A-55 SLAT ENGAGED ROLL-UP SHUTTER

ROLLAC SHUTTER OF TEXAS, INC.
5331 ORANGE STREET
PEARLAND, TX. 77581
PHONE: (800)880-0922 FAX: (281)485-0839

REV. No	DESCRIPTION	DATE	REV. No	DESCRIPTION	DATE
1	OLD 09-056	11/29/12	3		
2			4		

DRAWN BY: I.A./A.G

11/29/12 DATE

12-173 DRAWING No

SHEET 8 OF 17

TYPICAL MANDATORY PROCEDURE FOR VERIFYING SHUTTER CODE COMPLIANCE RELATED TO ITS INSTALLATION INTO EXISTING POURED CONCRETE OR GROUT FILLED CELL CONCRETE BLOCK STRUCTURES (*)

STEP 1:

OBTAIN JOB SITE'S DESIGN LOAD (p.s.f.) FOR THE OPENING AND DESIRED SHUTTER SPAN "L" (ft) TO PROTECT IT (SEE GENERAL NOTE #1, ON SHEET 1).

STEP 2:

ENTER TO CHARTS I THRU III ON SHEET 10 TO DETERMINE, BASED ON AN ASSUMED SLAT SLIP (in); DESIGN LOAD (p.s.f.); AND SHUTTER SPAN "L" (ft) ; THE REQUIRED FINAL SLAT SLIP THAT SLATS MUST BE INSTALLED WITH TO MEET THE REQUIRED LOAD AND DESIRED SHUTTER SPAN.

THE FOLLOWING INFORMATION IS PROVIDED AT CHARTS I THRU III TO PROCEED WITH SHUTTER INSTALLATION VERIFICATION:

- ENTER DESIGN LOAD: SEE STEP (1) ABOVE.
- FOR A SPECIFIC SHUTTER MOUNTING INSTALLATION TYPE, THE FOLLOWING DEFINITIONS FOR SLAT SPAN SHALL BE CONSIDERED:

LMAX: THIS IS THE MAXIMUM ALLOWABLE SHUTTER SPAN FOR WHICH A GIVEN SLAT SLIP (3/16",1/8" OR LESS THAN 1/8") MAY BE USED, FOR A GIVEN DESIGN LOAD.

LMIN: THIS IS THE MINIMUM ALLOWABLE SHUTTER SPAN FOR WHICH A GIVEN SLIP (3/16",1/8" OR LESS THAN 1/8") MAY BE USED, FOR A GIVEN DESIGN LOAD. IN CASE JOB SITE DESIRED SHUTTER SPAN (L) WAS SHORTER THAN LMIN, THEN GO TO THE OTHER CHARTS WITH A SHORTER SLAT SLIP AND VERIFY THAT (L) IS ALLOWED FOR THAT OTHER SHORTER SLIP.

- MINIMUM REQUIRED SEPARATION TO GLASS IS PROVIDED ON CHARTS I, II & III: PROVIDES SEPARATION TO GLASS FOR SHUTTERS WITH OR WITHOUT MULLIONS BASED ON SHUTTER INSTALLATIONS WITHIN WIND ZONES 1 THRU 4, AS DEFINED BY ASTM E 1996-05, SECTION 6.2.2.

STEP 3:

OBTAIN INFORMATION ON SHUTTER'S SIDE RAIL ANCHOR SPACING REQUIREMENTS FOR CONNECTION TO EXISTING STRUCTURE FROM ANCHOR SCHEDULE IV ON SHEET 11. ENTER SCHEDULE WITH FINALLY DETERMINED SUBSTRATE, MOUNTING TYPE, DESIGN LOAD & SHUTTER SPAN AND OBTAIN MAXIMUM ANCHOR SPACING (INCHES ON CENTERS). SEE GENERAL NOTE 6 ON SHEET 1 FOR ANCHOR SPECS.

STEP 4:

IF SHUTTER INSTALLATION INCLUDES MULLIONS, THE FOLLOWING MANDATORY ADDITIONAL PROCEDURE IS APPLICABLE.

PROCEDURE 4a: IF MULLIONS ARE USED

1. MINIMUM SEPARATION TO GLASS FOR SLATS IF MULLIONS ARE USED SHALL BE BASED ON INSTALLATIONS PERFORMED WITHIN ASTM WIND ZONES 1 THRU 4 INDICATED ON CHARTS I, II & III ON SHEET 10. IT SHALL BE MEASURED FROM BACK OF SLATS TO GLASS. FOR INSTALLATIONS WITHIN ASTM WIND ZONES 1 THRU 3 WHERE MINIMIZING OF THE PROBABILITY OF BREACHING OF GLASS IS DESIRED EVEN THOUGH IT IS NOT REQUIRED BY THE FLORIDA BUILDING CODE, MINIMUM SEPARATION TO GLASS FOR SLATS SHALL BE IDENTICAL TO WIND ZONE 4 VALUES.
2. ENTER SCHEDULES 1a THRU 2c ON SHEET 15 W/ DESIGN LOAD ; MAXIMUM MULLION SPACING (MAX., 10', 8' OR 6'), AND DETERMINE MAXIMUM MULLION SPAN (HEIGHT) W/ ALLOWABLE INTERPOLATION IN BETWEEN SPACINGS FOR A GIVEN Ⓕ & Ⓖ, MULLION TYPE & MULLION ORIENTATION.
3. SEE SHEETS 13 & 14 FOR REQUIRED MULLION CONNECTION DETAILS AT TOP & BOTTOM FOR FLOOR TO CEILING (TRAPPED) OR WALL MOUNTINGS OF MULLIONS INTO CONCRETE FOR A GIVEN MULLION TYPE Ⓕ & Ⓖ.

* PROCEDURE PER STEPS 1 THRU 3 IS SIMILAR FOR INSTALLATIONS INTO WOOD FRAME STRUCTURES. SEE SHEETS 16 & 17 FOR LIMITATIONS APPLICABLE TO INSTALLATIONS INTO WOOD FRAME STRUCTURES.

12/4/12

TEXAS DEPARTMENT OF INSURANCE - 2006

WALTER A. TILLIT Jr. P.E.
PROFESSIONAL ENGINEER
6355 N.W. 36TH. ST., STE. 305
VIRGINIA GARDENS, FL. 33166
PHONE : (305) 871-1530 , FAX : (305) 871-1531
TEXAS LIC. # 90691
FIRM REGISTRATION # F-13790

APEX A-55 SLAT ENGAGED ROLL-UP SHUTTER

ROLLAC SHUTTER OF TEXAS, INC.
5331 ORANGE STREET
PEARLAND, TX. 77581
PHONE: (800)880-0922 FAX: (281)485-0839

REV. No	DESCRIPTION	DATE	REV. No	DESCRIPTION	DATE
1	OLD 09-056	11/29/12	3		
2			4		

DRAWN BY: I.A./A.G

11/29/12 DATE

12-173 DRAWING No

SLAT PERFORMANCE CHARTS I, II & III:
VALID FOR INSTALLATIONS INTO POURED CONCRETE GROUT FILLED CELL, CONCRETE BLOCK OR MULLIONS AND FOR A GIVEN DESIGN LOAD (p.s.f.) AND SHUTTER MOUNT CONDITION

CHART I (ONLY VALID FOR 3/16" SLIP)

USE MAXIMUM VALUE BETWEEN POSITIVE AND NEGATIVE LOAD						USE MAXIMUM POSITIVE LOAD VALUE	
DESIGN LOAD (p.s.f.)	MAX. SLAT SPAN				REQUIRED MIN. SLAT SPAN	MIN. SEPARATION TO GLASS (in)	
	WALL MOUNT (SEE NOTES *)	TRAPPED MOUNT (SEE NOTES *)	BUILD-OUT MOUNT (SEE NOTES *)		WALL TRAPPED & BUILD-OUT MOUNT W/ Ⓔ, Ⓔ1 (SEE NOTES *)	WIND ZONE 1, 2 & 3	WIND ZONE 4
			Ⓔ1	Ⓔ			
30.0	10'-0"	10'-0"	10'-0"	10'-0"	5'-11"	1"	10"
35.0	10'-0"	10'-0"	10'-0"	10'-0"	5'-8"	1"	10"
40.0	10'-0"	10'-0"	10'-0"	10'-0"	5'-5"	1"	10"
45.0	10'-0"	10'-0"	10'-0"	9'-7"	5'-3"	1"	10"
50.0	10'-0"	10'-0"	10'-0"	9'-0"	5'-1"	1"	10"
53.3	10'-0"	10'-0"	10'-0"	8'-8"	5'-0"	1"	10"

CHART II (ONLY VALID FOR 1/8" SLIP)

USE MAXIMUM VALUE BETWEEN POSITIVE AND NEGATIVE LOAD						USE MAXIMUM POSITIVE LOAD VALUE	
DESIGN LOAD (p.s.f.)	MAX. SLAT SPAN				REQUIRED MIN. SLAT SPAN	MIN. SEPARATION TO GLASS (in)	
	WALL MOUNT (SEE NOTES *)	TRAPPED MOUNT (SEE NOTES *)	BUILD-OUT MOUNT (SEE NOTES *)		WALL TRAPPED & BUILD-OUT MOUNT W/ Ⓔ, Ⓔ1 (SEE NOTES *)	WIND ZONE 1, 2 & 3	WIND ZONE 4
			Ⓔ1	Ⓔ			
30.0	9'-0"	9'-0"	9'-0"	9'-0"	5'-7"	1"	10"
35.0	9'-0"	9'-0"	9'-0"	9'-0"	5'-4"	1"	10"
40.0	9'-0"	9'-0"	9'-0"	9'-0"	5'-2"	1"	10"
45.0	9'-0"	9'-0"	9'-0"	9'-0"	5'-0"	1"	10"
50.0	9'-0"	9'-0"	9'-0"	8'-1"	4'-10"	1"	10"
53.3	9'-0"	9'-0"	9'-0"	7'-10"	4'-9"	1"	10"

CHART III (ONLY VALID FOR LESS THAN 1/8" SLIP)

USE MAXIMUM VALUE BETWEEN POSITIVE AND NEGATIVE LOAD			USE MAXIMUM POSITIVE LOAD VALUE	
DESIGN LOAD (p.s.f.)	MAX. SLAT SPAN L_{MAX} (ft)	REQUIRED MIN. SLAT SPAN L_{MIN} (ft)	MIN. SEPARATION TO GLASS (in)	
	WALL TRAPPED & BUILD-OUT MOUNT W/ Ⓔ, Ⓔ1 (SEE NOTES *)	WALL TRAPPED & BUILD-OUT MOUNT W/ Ⓔ, Ⓔ1 (SEE NOTES *)	WIND ZONE 1, 2 & 3	WIND ZONE 4
30.0	3'-11"	0'-0"	1"	4"
35.0	3'-8"	0'-0"	1"	4"
40.0	3'-5"	0'-0"	1"	4"
45.0	3'-3"	0'-0"	1"	4"
50.0	3'-1"	0'-0"	1"	4"
53.3	3'-0"	0'-0"	1"	4"

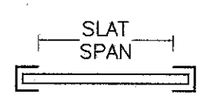

SLAT SPAN DEFINITION

* **NOTES:**

1. ABOVE INDICATED MAX. SLAT SPANS MAY BE USED AS LONG AS ANCHOR SPACING SCHEDULES ON SHEET 11 INDICATE THAT A SPACING IS AVAILABLE FOR THE CORRESPONDING SLAT SPAN AND DESIGN LOAD.
2. REQUIRES SIDE RAILS FASTENED TO EXISTING STRUCTURE WITH 5/16"ø ITW BUILDEX TAPCON XL INTO POURED CONCRETE OR GROUT FILLED CELL CONCRETE BLOCK OR 1/4"ø TEK SCREWS AT MULLIONS CONNECTION VALID FOR WALL MOUNTED, INSIDE MOUNTED, AND BUILD-OUT MOUNTED.
3. MAXIMUM SLAT SPANS FOR INTERMEDIATE LOADS MAY BE DETERMINED BY LINEAR INTERPOLATION BETWEEN END VALUES.

12/4/12

TEXAS DEPARTMENT OF INSURANCE - 2006

WALTER A. TILLIT Jr. P.E.
PROFESSIONAL ENGINEER
6355 N.W. 36TH. ST., STE. 305
VIRGINIA GARDENS, FL. 33166
PHONE : (305) 871-1530 , FAX : (305) 871-1531
TEXAS LIC. # 90691
FIRM REGISTRATION # F-13790

APEX A-55 SLAT ENGAGED ROLL-UP SHUTTER

ROLLAC SHUTTER OF TEXAS, INC.
5331 ORANGE STREET
PEARLAND, TX. 77581
PHONE: (800)880-0922 FAX: (281)485-0839

REV. No	DESCRIPTION	DATE	REV. No	DESCRIPTION	DATE
1	OLD 09-056	11/29/12	3		
2			4		

DRAWN BY: I.A./A.G

11/29/12 DATE

12-173 DRAWING No

SHEET 10 OF 17

MAX. ANCHOR SPACING SCHEDULE IV FOR A GIVEN PRODUCT MOUNTING TYPE W/ ø 5/16" ITW BUILDEX TAPCON XL ANCHORS TO POURED CONCRETE WALL OR GROUT FILLED CELL CONCRETE BLOCK WALL, FOR A GIVEN DESIGN LOAD & SLAT SPAN RANGE

WALL MOUNT

DESIGN LOAD RANGE (p.s.f.)	SLAT SPAN RANGE					
	0' to 4'	> 4' to 5'	> 5' to 6'	> 6' to 7'	> 7' to 9'	> 9' to 10'
≤ 30.0	8"	8"	8"	8"	8"	8"
≥ 31–40	8"	8"	8"	8"	8"	8"
≥ 41–53.3	8"	8"	8"	8"	7"	6"

TRAPPED MOUNT

DESIGN LOAD RANGE (p.s.f.)	SLAT SPAN RANGE					
	0' to 4'	> 4' to 5'	> 5' to 6'	> 6' to 7'	> 7' to 9'	> 9' to 10'
≤ 30.0	6"	6"	6"	6"	6"	6"
≥ 31–40	6"	6"	6"	6"	6"	6"
≥ 41–53.3	6"	6"	6"	6"	6"	6"

BUILD-OUT MOUNT W/ (E1) OR (E)

DESIGN LOAD RANGE (p.s.f.)	SLAT SPAN RANGE					
	0' to 4'	> 4' to 5'	> 5' to 6'	> 6' to 7'	> 7' to 9'	> 9' to 10'
≤ 30.0	4"	4"	4"	4"	4"	4"
≥ 31–40	4"	4"	4"	4"	4"	4"
≥ 41–53.3	4"	4"	4"	4"	3 3/4"	3 3/4"

SLAT SPAN DEFINITION

STATE OF TEXAS
12/4/12
REGISTERED PROFESSIONAL ENGINEER
WALTER A. TILLIT JR.

TEXAS DEPARTMENT OF INSURANCE – 2006

WALTER A. TILLIT Jr. P.E.
PROFESSIONAL ENGINEER
6355 N.W. 36TH. ST., STE. 305
VIRGINIA GARDENS, FL. 33166
PHONE : (305) 871–1530 , FAX : (305) 871–1531

TEXAS LIC. # 90691

FIRM REGISTRATION # F–13790

APEX A-55 SLAT ENGAGED ROLL-UP SHUTTER

ROLLAC SHUTTER OF TEXAS, INC.
5331 ORANGE STREET
PEARLAND, TX. 77581
PHONE: (800)880–0922 FAX: (281)485–0839

REV. No	DESCRIPTION	DATE	REV. No	DESCRIPTION	DATE
1	OLD 09–056	11/29/12	3		
2			4		

DRAWN BY: I.A./A.G

11/29/12 DATE

12–173 DRAWING No

SHEET 11 OF 17

SCHEDULE V:

Vx FORCES (Lb/ft) & **Vy** FORCES (Lb/ft) ACTING AT JAMBS FOR A DESIGN LOAD RANGE AND SLAT SPAN RANGE FOR POURED CONCRETE OR GROUT FILLED CELL CONCRETE BLOCK WALL BUILDINGS*

(USE MAXIMUM VALUE BETWEEN POSITIVE AND NEGATIVE LOAD)

DESIGN LOAD RANGE (p.s.f.)	SLAT SPAN RANGE											
	0' to 4'		> 4' to 5'		> 5' to 6'		> 6' to 7'		> 7' to 9'		> 9' to 10'	
	Vx	Vy	Vx	Vy	Vx	Vy	Vx	Vy	Vx	Vy	Vx	Vy
≤ 30.0	10	59	11	84	10	89	246	105	565	135	702	150
≥ 31–40	10	68	22	103	10	108	412	140	786	180	952	200
≥ 41–53.3	10	80	21	127	10	133	624	187	1070	240	1273	267

*__NOTE:__

IT SHALL BE THE RESPONSIBILITY OF THE CONTRACTOR OR PERMIT HOLDER TO VERIFY THAT EXISTING STRUCTURE IS DESIGNED TO SUPPORT **Vx** AND **Vy** FORCES IN POUNDS PER UNIT FOOT OF SHUTTER HEIGHT AT BOTH JAMBS.
SEE THIS SHEET FOR **Vx** & **Vy** VALUES.

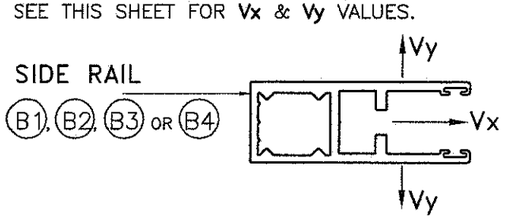

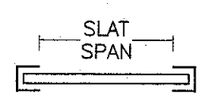

SLAT SPAN DEFINITION

STATE OF TEXAS

11/4/12

TEXAS DEPARTMENT OF INSURANCE – 2006

WALTER A. TILLIT Jr. P.E.
PROFESSIONAL ENGINEER
6355 N.W. 36TH. ST., STE. 305
VIRGINIA GARDENS, FL. 33166
PHONE : (305) 871–1530 , FAX : (305) 871–1531
TEXAS LIC. # 90691
FIRM REGISTRATION # F–13790

APEX A-55 SLAT ENGAGED ROLL-UP SHUTTER

ROLLAC SHUTTER OF TEXAS, INC.
5331 ORANGE STREET
PEARLAND, TX. 77581
PHONE: (800)880–0922 FAX: (281)485–0839

REV. No	DESCRIPTION	DATE	REV. No	DESCRIPTION	DATE
1	OLD 09–056	11/29/12	3		
2			4		

DRAWN BY: I.A./A.G

11/29/12 DATE

12–173 DRAWING No

SHEET 12 OF 17

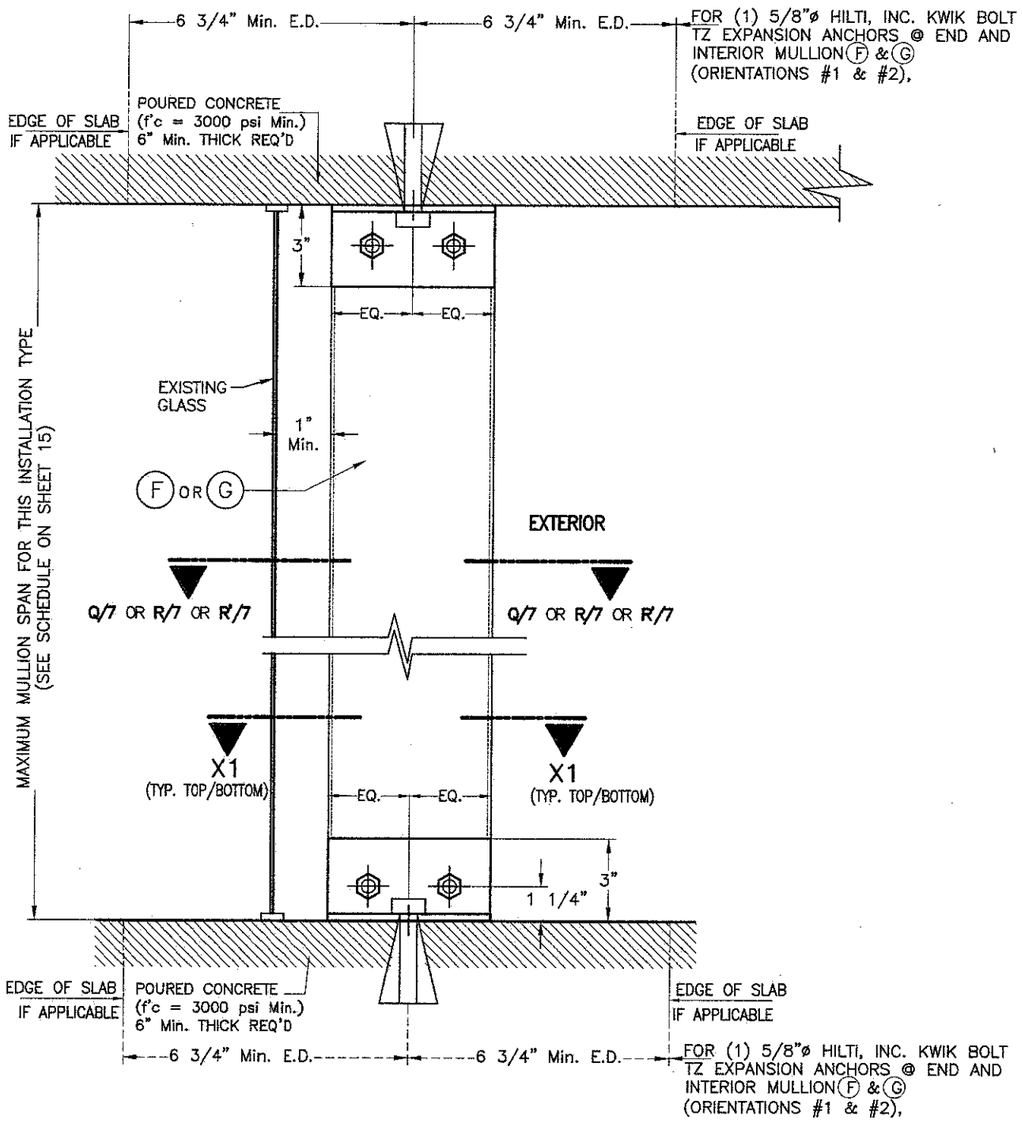

FLOOR TO CEILING / TRAPPED MOUNTING:
MULLION (F) OR (G)
SECTION W-1 *

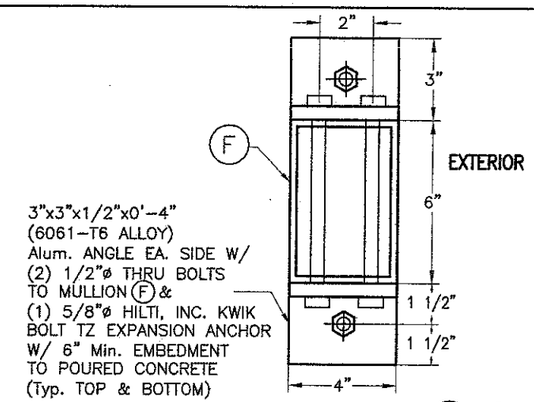

SECTION X1-X1 W/ (F) *
(END & INTERIOR MULLION W/ ORIENTATION # 1)

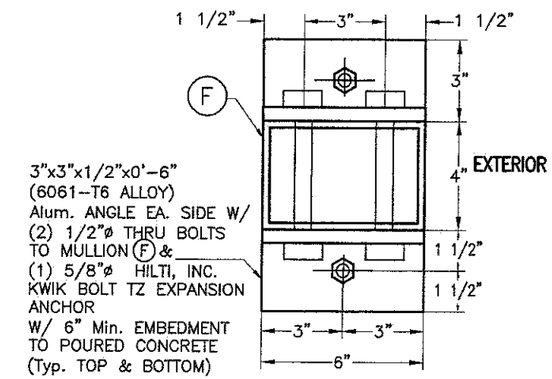

ALTERNATIVE SECTION X1-X1 W/ (F) *
(END & INTERIOR MULLION W/ ORIENTATION # 2)

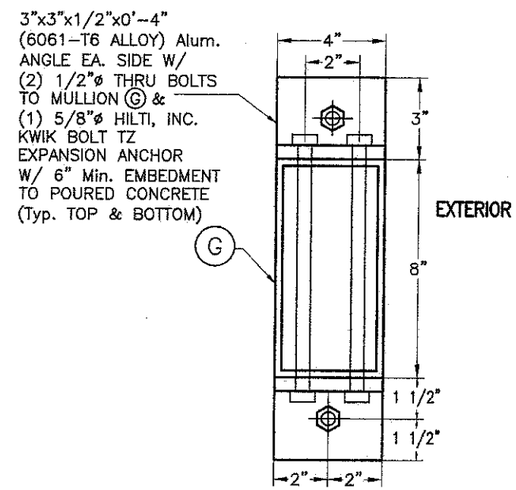

SECTION X1-X1 W/ (G) *
(END & INTERIOR MULLION W/ ORIENTATION # 1)

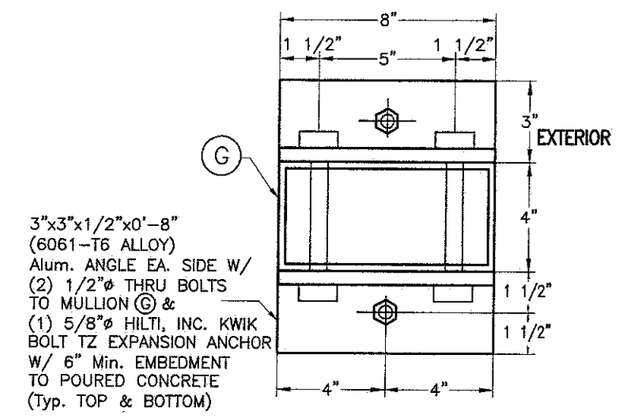

ALTERNATIVE SECTION X1-X1 W/ (G) *
(END & INTERIOR MULLION W/ ORIENTATION # 2)

* SIDE RAILS (B1), (B2), (B3) OR (B4) AND BOX NOT SHOWN FOR CLARITY.

END & INTERIOR TRAPPED MOUNTED MULLION INSTALLATION

SCALE: 3/16" = 1"

TEXAS DEPARTMENT OF INSURANCE – 2006

WALTER A. TILLIT Jr. P.E. PROFESSIONAL ENGINEER 6355 N.W. 36TH. ST., STE. 305 VIRGINIA GARDENS, FL. 33166 PHONE : (305) 871-1530 , FAX : (305) 871-1531 TEXAS LIC. # 90691 *FIRM REGISTRATION # F-13790*	APEX A-55 SLAT ENGAGED ROLL-UP SHUTTER ROLLAC SHUTTER OF TEXAS, INC. 5331 ORANGE STREET PEARLAND, TX. 77581 PHONE: (800)880-0922 FAX: (281)485-0839	DRAWN BY: I.A./A.G 11/29/12 DATE 12-173 DRAWING No SHEET 13 OF 17	

REV. No	DESCRIPTION	DATE	REV. No	DESCRIPTION	DATE
1	OLD 09-056	11/29/12	3		
2			4		

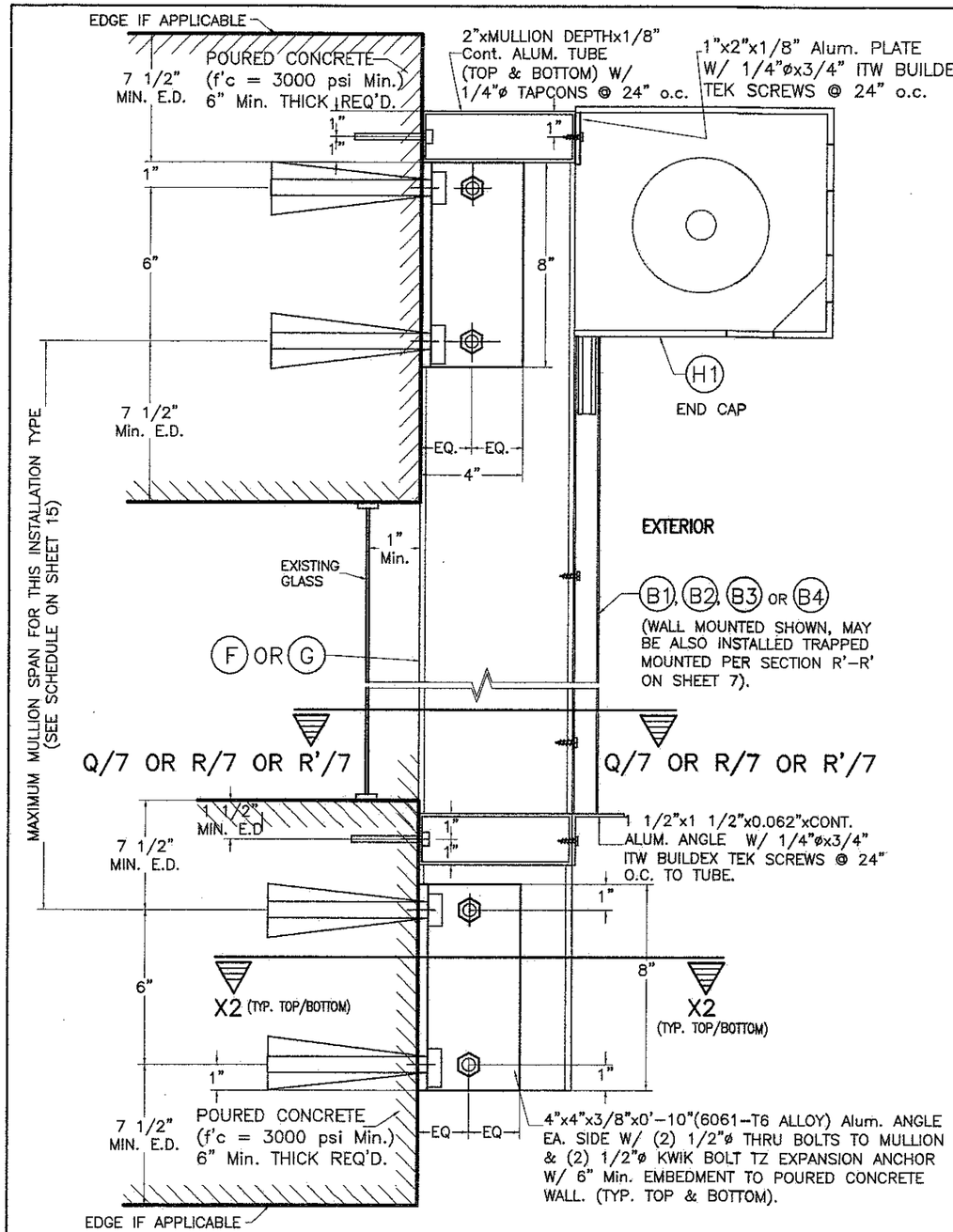

WALL MOUNTING : MULLION (F) OR (G)
POURED CONCRETE WALL
SECTION W-2 *

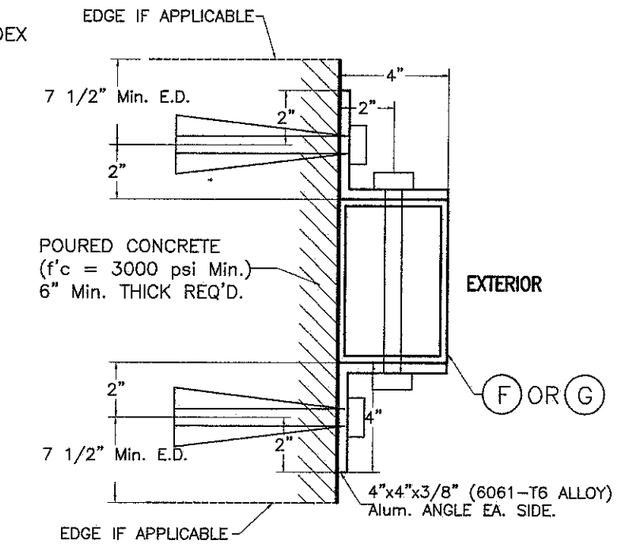

SECTION X2-X2 W/ (F) OR (G) *
(END & INTERIOR MULLION W/ ORIENTATION # 1)
(6"x4" OR 8"x4")

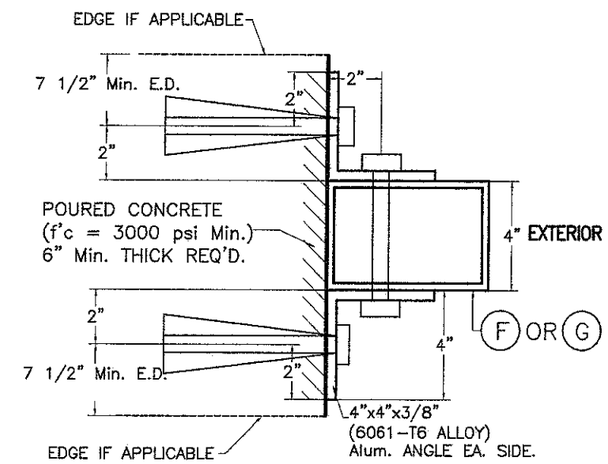

ALTERNATIVE SECTION X2-X2 W/ (F) OR (G) *
(END & INTERIOR MULLION W/ ORIENTATION # 2)
(4"x6" OR 4"x8")

* SIDE RAILS (B1), (B2), (B3) OR (B4) NOT SHOWN FOR CLARITY.

END & INTERIOR WALL MOUNTED MULLION INSTALLATION
SCALE: 1/8" = 1"

STATE OF TEXAS — 12/4/12 — LICENSED PROFESSIONAL ENGINEER

TEXAS DEPARTMENT OF INSURANCE – 2006

WALTER A. TILLIT Jr. P.E. PROFESSIONAL ENGINEER 6355 N.W. 36TH. ST., STE. 305 VIRGINIA GARDENS, FL. 33166 PHONE : (305) 871-1530 , FAX : (305) 871-1531 TEXAS LIC. # 90691 FIRM REGISTRATION # F-13790	APEX A-55 SLAT ENGAGED ROLL-UP SHUTTER ROLLAC SHUTTER OF TEXAS, INC. 5331 ORANGE STREET PEARLAND, TX. 77581 PHONE: (800)880-0922 FAX: (281)485-0839	DRAWN BY: I.A./A.G 11/29/12 DATE 12-173 DRAWING No	

REV. No	DESCRIPTION	DATE	REV. No	DESCRIPTION	DATE
1	OLD 09-056	11/29/12	3		
2			4		

SHEET 14 OF 17

SCHEDULE 1a
FLOOR TO CEILING (TRAPPED) MOUNTING
MAX. SPAN (ft.) FOR END AND INTERIOR MULLION FOR A GIVEN DESIGN LOAD (p.s.f.) AND A 10'-0" MAX. MULLION SPACING (ft.) *
VALID ONLY FOR INSTALLATIONS INTO CONCRETE

DESIGN LOAD (p.s.f.)	MAXIMUM MULLION SPACING (ft) *	MAXIMUM MULLION SPAN (ft.)							
		(F) 4"x6"x1/4" MULLION				(G) 4"x8"x1/4" MULLION			
		ORIENTATION #1 (⬌)‡		ORIENTATION #2 ([])‡		ORIENTATION #1 (⬌)‡		ORIENTATION #2 ([])‡	
		END	INTERIOR	END	INTERIOR	END	INTERIOR	END	INTERIOR
30.0	10'-0"	11'-1"	12'-0"	9'-3"	12'-0"	12'-0"	12'-0"	12'-0"	12'-0"
35.0	10'-0"	10'-3"	11'-7"	8'-9"	11'-7"	12'-0"	12'-0"	12'-0"	12'-0"
40.0	10'-0"	9'-6"	11'-1"	8'-4"	11'-1"	11'-4"	12'-0"	11'-1"	12'-0"
45.0	10'-0"	9'-0"	10'-8"	8'-0"	10'-8"	10'-3"	11'-7"	9'-10"	11'-7"
50.0	10'-0"	8'-6"	10'-4"	7'-9"	10'-4"	9'-3"	11'-3"	8'-10"	11'-3"
53.3	10'-0"	8'-3"	10'-1"	7'-7"	10'-1"	8'-8"	11'-0"	8'-4"	11'-0"

SCHEDULE 2a
WALL MOUNTING
MAX. SPAN (ft.) FOR END AND INTERIOR MULLION FOR A GIVEN DESIGN LOAD (p.s.f.) AND A 10'-0" MAX. MULLION SPACING (ft.) *
VALID ONLY FOR INSTALLATIONS INTO CONCRETE

DESIGN LOAD (p.s.f.)	MAXIMUM MULLION SPACING (ft) *	MAXIMUM MULLION SPAN (ft.)							
		(F) 4"x6"x1/4" MULLION				(G) 4"x8"x1/4" MULLION			
		ORIENTATION #1 (⬌)‡		ORIENTATION #2 ([])‡		ORIENTATION #1 (⬌)‡		ORIENTATION #2 ([])‡	
		END	INTERIOR	END	INTERIOR	END	INTERIOR	END	INTERIOR
30.0	10'-0"	11'-1"	12'-0"	9'-3"	12'-0"	12'-0"	12'-0"	12'-0"	12'-0"
35.0	10'-0"	10'-3"	11'-7"	8'-9"	11'-7"	12'-0"	12'-0"	8'-7"	12'-0"
40.0	10'-0"	9'-6"	11'-1"	8'-4"	11'-1"	11'-4"	12'-0"	7'-6"	12'-0"
45.0	10'-0"	9'-0"	10'-8"	8'-0"	10'-8"	10'-8"	11'-7"	6'-7"	11'-7"
50.0	10'-0"	8'-6"	10'-4"	7'-9"	10'-4"	10'-1"	11'-3"	5'-11"	11'-3"
53.3	10'-0"	8'-3"	10'-1"	7'-7"	10'-1"	9'-9"	11'-0"	5'-7"	11'-0"

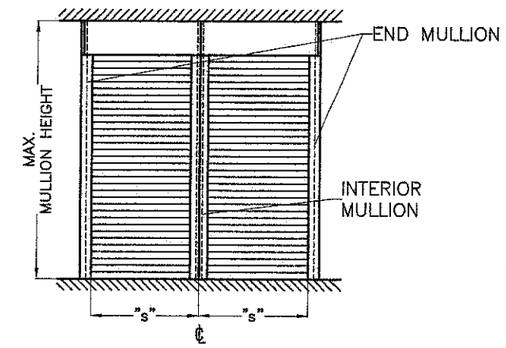

MULLION SPACING: "s"

SCHEDULE 1b
FLOOR TO CEILING (TRAPPED) MOUNTING
MAX. SPAN (ft.) FOR END AND INTERIOR MULLION FOR A GIVEN DESIGN LOAD (p.s.f.) AND A 8'-0" MAX. MULLION SPACING (ft.) *
VALID ONLY FOR INSTALLATIONS INTO CONCRETE

DESIGN LOAD (p.s.f.)	MAXIMUM MULLION SPACING (ft) *	MAXIMUM MULLION SPAN (ft.)							
		(F) 4"x6"x1/4" MULLION				(G) 4"x8"x1/4" MULLION			
		ORIENTATION #1 (⬌)‡		ORIENTATION #2 ([])‡		ORIENTATION #1 (⬌)‡		ORIENTATION #2 ([])‡	
		END	INTERIOR	END	INTERIOR	END	INTERIOR	END	INTERIOR
30.0	8'-0"	12'-0"	12'-0"	11'-0"	12'-0"	12'-0"	12'-0"	12'-0"	12'-0"
35.0	8'-0"	12'-0"	12'-0"	10'-3"	12'-0"	12'-0"	12'-0"	12'-0"	12'-0"
40.0	8'-0"	11'-7"	12'-0"	9'-8"	12'-0"	12'-0"	12'-0"	12'-0"	12'-0"
45.0	8'-0"	10'-10"	11'-6"	9'-2"	11'-6"	12'-0"	12'-0"	12'-0"	12'-0"
50.0	8'-0"	10'-3"	11'-1"	8'-10"	11'-1"	12'-0"	12'-0"	12'-0"	12'-0"
53.3	8'-0"	9'-10"	10'-11"	8'-7"	10'-11"	11'-8"	11'-10"	11'-7"	11'-10"

SCHEDULE 2b
WALL MOUNTING
MAX. SPAN (ft.) FOR END AND INTERIOR MULLION FOR A GIVEN DESIGN LOAD (p.s.f.) AND A 8'-0" MAX. MULLION SPACING (ft.) *
VALID ONLY FOR INSTALLATIONS INTO CONCRETE

DESIGN LOAD (p.s.f.)	MAXIMUM MULLION SPACING (ft) *	MAXIMUM MULLION SPAN (ft.)							
		(F) 4"x6"x1/4" MULLION				(G) 4"x8"x1/4" MULLION			
		ORIENTATION #1 (⬌)‡		ORIENTATION #2 ([])‡		ORIENTATION #1 (⬌)‡		ORIENTATION #2 ([])‡	
		END	INTERIOR	END	INTERIOR	END	INTERIOR	END	INTERIOR
30.0	8'-0"	12'-0"	12'-0"	11'-0"	12'-0"	12'-0"	12'-0"	12'-0"	12'-0"
35.0	8'-0"	12'-0"	12'-0"	10'-3"	12'-0"	12'-0"	12'-0"	12'-0"	12'-0"
40.0	8'-0"	11'-7"	12'-0"	9'-8"	12'-0"	12'-0"	12'-0"	12'-0"	12'-0"
45.0	8'-0"	10'-10"	11'-6"	9'-2"	11'-6"	12'-0"	12'-0"	9'-11"	12'-0"
50.0	8'-0"	10'-3"	11'-1"	8'-10"	11'-1"	12'-0"	12'-0"	8'-10"	12'-0"
53.3	8'-0"	9'-10"	10'-11"	8'-7"	10'-11"	11'-8"	11'-10"	8'-2"	11'-10"

* MAXIMUM MULLION SPACING SHALL BE SUCH THAT MAX SLAT SPAN FOR THAT DESIGN LOAD SHALL NOT BE EXCEEDED.

‡ MULLION ORIENTATION IS AS SEEN FROM THE OUTSIDE (EXTERIOR) OF SHUTTER.

SCHEDULE 1c
FLOOR TO CEILING (TRAPPED) MOUNTING
MAX. SPAN (ft.) FOR END AND INTERIOR MULLION FOR A GIVEN DESIGN LOAD (p.s.f.) AND A 6'-0" MAX. MULLION SPACING (ft.) *
VALID ONLY FOR INSTALLATIONS INTO CONCRETE

DESIGN LOAD (p.s.f.)	MAXIMUM MULLION SPACING (ft) *	MAXIMUM MULLION SPAN (ft.)							
		(F) 4"x6"x1/4" MULLION				(G) 4"x8"x1/4" MULLION			
		ORIENTATION #1 (⬌)‡		ORIENTATION #2 ([])‡		ORIENTATION #1 (⬌)‡		ORIENTATION #2 ([])‡	
		END	INTERIOR	END	INTERIOR	END	INTERIOR	END	INTERIOR
30.0	6'-0"	12'-0"	12'-0"	12'-0"	12'-0"	12'-0"	12'-0"	12'-0"	12'-0"
35.0	6'-0"	12'-0"	12'-0"	12'-0"	12'-0"	12'-0"	12'-0"	12'-0"	12'-0"
40.0	6'-0"	12'-0"	12'-0"	12'-0"	12'-0"	12'-0"	12'-0"	12'-0"	12'-0"
45.0	6'-0"	12'-0"	12'-0"	12'-0"	12'-0"	12'-0"	12'-0"	12'-0"	12'-0"
50.0	6'-0"	12'-0"	12'-0"	12'-0"	12'-0"	12'-0"	12'-0"	12'-0"	12'-0"
53.3	6'-0"	12'-0"	12'-0"	11'-7"	12'-0"	12'-0"	12'-0"	12'-0"	12'-0"

SCHEDULE 2c
WALL MOUNTING
MAX. SPAN (ft.) FOR END AND INTERIOR MULLION FOR A GIVEN DESIGN LOAD (p.s.f.) AND A 6'-0" MAX. MULLION SPACING (ft.) *
VALID ONLY FOR INSTALLATIONS INTO CONCRETE

DESIGN LOAD (p.s.f.)	MAXIMUM MULLION SPACING (ft) *	MAXIMUM MULLION SPAN (ft.)							
		(F) 4"x6"x1/4" MULLION				(G) 4"x8"x1/4" MULLION			
		ORIENTATION #1 (⬌)‡		ORIENTATION #2 ([])‡		ORIENTATION #1 (⬌)‡		ORIENTATION #2 ([])‡	
		END	INTERIOR	END	INTERIOR	END	INTERIOR	END	INTERIOR
30.0	6'-0"	12'-0"	12'-0"	12'-0"	12'-0"	12'-0"	12'-0"	12'-0"	12'-0"
35.0	6'-0"	12'-0"	12'-0"	12'-0"	12'-0"	12'-0"	12'-0"	12'-0"	12'-0"
40.0	6'-0"	12'-0"	12'-0"	12'-0"	12'-0"	12'-0"	12'-0"	12'-0"	12'-0"
45.0	6'-0"	12'-0"	12'-0"	12'-0"	12'-0"	12'-0"	12'-0"	12'-0"	12'-0"
50.0	6'-0"	12'-0"	12'-0"	12'-0"	12'-0"	12'-0"	12'-0"	12'-0"	12'-0"
53.3	6'-0"	12'-0"	12'-0"	11'-7"	12'-0"	12'-0"	12'-0"	12'-0"	12'-0"

STATE OF TEXAS
12/4/12
REGISTERED PROFESSIONAL ENGINEER

TEXAS DEPARTMENT OF INSURANCE – 2006

WALTER A. TILLIT Jr. P.E.
PROFESSIONAL ENGINEER
6355 N.W. 36TH. ST., STE. 305
VIRGINIA GARDENS, FL. 33166
PHONE : (305) 871-1530 , FAX : (305) 871-1531

TEXAS LIC. # 90691

FIRM REGISTRATION # F-13790

APEX A-55 SLAT ENGAGED ROLL-UP SHUTTER

DRAWN BY: I.A./A.G

ROLLAC SHUTTER OF TEXAS, INC.
5331 ORANGE STREET
PEARLAND, TX. 77581
PHONE: (800)880-0922 FAX: (281)485-0839

11/29/12 DATE

12-173 DRAWING No

REV. No	DESCRIPTION	DATE	REV. No	DESCRIPTION	DATE
1	OLD 09-056	11/29/12	3		
2			4		

SHEET 15 OF 17

SLAT PERFORMANCE CHARTS Ib, IIb & IIIb:
FOR A GIVEN DESIGN LOAD (p.s.f.) AND SHUTTER MOUNT CONDITION PER DETAIL 1 BELOW

CHART Ib: (ONLY VALID FOR 3/16" SLIP)

USE MAXIMUM VALUE BETWEEN POSITIVE AND NEGATIVE LOAD

DESIGN LOAD (p.s.f.)	MAX. SLAT SPAN "LMAX." (ft)												REQUIRED MIN. SLAT SPAN "LMIN." (ft)	USE MAXIMUM POSITIVE LOAD VALUE	
	WALL MOUNT (SEE NOTES Δ)			TRAPPED MOUNT (SEE NOTES Δ)			BUILD-OUT MOUNT (E1) (SEE NOTES Δ)			BUILD-OUT MOUNT (E) (SEE NOTES Δ)			WALL & TRAPPED MOUNT BUILD-OUT MOUNT W/ (E1) OR (E) G=0.36*, G=0.46* G=0.55* (SEE NOTES Δ)	REQUIRED MIN. SEPARATION TO GLASS MESURED TO BACK OF SLAT (in)	
	G=0.55 *	G=0.46 *	G=0.36 *	G=0.55 *	G=0.46 *	G=0.36 *	G=0.55 *	G=0.46 *	G=0.36 *	G=0.55 *	G=0.46 *	G=0.36 *		WIND ZONES 1-3	WIND ZONE 4
30.0	10'-0"	10'-0"	10'-0"	10'-0"	10'-0"	10'-0"	10'-0"	9'-9"	8'-6"	10'-0"	8'-10"	7'-9"	5'-11"	1"	10"
35.0	10'-0"	10'-0"	–	10'-0"	10'-0"	–	10'-0"	8'-10"	–	10'-0"	8'-1"	–	5'-8"		
40.0	10'-0"	9'-6"	–	10'-0"	10'-0"	–	10'-0"	8'-3"	–	10'-0"	7'-7"	–	5'-5"		
45.0	10'-0"	–	–	10'-0"	–	–	10'-0"	–	–	9'-3"	–	–	5'-3"		
50.0	10'-0"	–	–	10'-0"	–	–	10'-0"	–	–	8'-8"	–	–	5'-1"		
53.3	10'-0"	–	–	10'-0"	–	–	10'-0"	–	–	8'-3"	–	–	5'-0"		

CHART IIb: (ONLY VALID FOR 1/8" SLIP)

USE MAXIMUM VALUE BETWEEN POSITIVE AND NEGATIVE LOAD

DESIGN LOAD (p.s.f.)	MAX. SLAT SPAN "LMAX." (ft)												REQUIRED MIN. SLAT SPAN "LMIN." (ft)	USE MAXIMUM POSITIVE LOAD VALUE	
	WALL MOUNT (SEE NOTES Δ)			TRAPPED MOUNT (SEE NOTES Δ)			BUILD-OUT MOUNT (E1) (SEE NOTES Δ)			BUILD-OUT MOUNT (E) (SEE NOTES Δ)			WALL & TRAPPED MOUNT BUILD-OUT MOUNT W/ (E1) OR (E) G=0.36*, G=0.46* G=0.55* (SEE NOTES Δ)	REQUIRED MIN. SEPARATION TO GLASS MESURED TO BACK OF SLAT (in)	
	G=0.55 *	G=0.46 *	G=0.36 *	G=0.55 *	G=0.46 *	G=0.36 *	G=0.55 *	G=0.46 *	G=0.36 *	G=0.55 *	G=0.46 *	G=0.36 *		WIND ZONES 1-3	WIND ZONE 4
30.0	9'-0"	9'-0"	9'-0"	9'-0"	9'-0"	9'-0"	9'-0"	8'-9"	7'-9"	9'-0"	8'-0"	7'-1"	5'-7"	1"	10"
35.0	9'-0"	9'-0"	–	9'-0"	9'-0"	–	9'-0"	8'-0"	–	9'-0"	7'-4"	–	5'-4"		
40.0	9'-0"	8'-7"	–	9'-0"	9'-0"	–	9'-0"	7'-6"	–	9'-0"	6'-11"	–	5'-2"		
45.0	9'-0"	–	–	9'-0"	–	–	9'-0"	–	–	8'-4"	–	–	5'-0"		
50.0	9'-0"	–	–	9'-0"	–	–	9'-0"	–	–	7'-10"	–	–	4'-10"		
53.3	9'-0"	–	–	9'-0"	–	–	9'-0"	–	–	7'-5"	–	–	4'-9"		

CHART IIIb: (LESS THAN 1/8" SLIP)

USE MAXIMUM VALUE BETWEEN POSITIVE AND NEGATIVE LOAD

DESIGN LOAD (psf)	MAX. SLAT SPAN "LMAX." (FT) WALL & TRAPPED MOUNT BUILD-OUT MOUNT W/ (E1) OR (E) G=0.36*, G=0.46* G=0.55* (SEE NOTES Δ)	MIN. SLAT SPAN "LMIN." (FT) WALL & TRAPPED MOUNT BUILD-OUT MOUNT W/ (E1) OR (E) G=0.36*, G=0.46* G=0.55* (SEE NOTES Δ)	USE MAXIMUM POSITIVE LOAD VALUE: REQUIRED MIN. SEPARATION TO GLASS MEASURED TO BACK OF SLAT (in) WIND ZONES 1-3	WIND ZONE 4
30.0	3'-11"	0'-0"	1"	4"
35.0	3'-8"			
40.0	3'-5"			
45.0	3'-3"			
50.0	3'-1"			
53.3	3'-0"			

*: G=0.55, APPLICABLE TO SOUTHERN YELLOW PINE #2 WOOD GRADE
G=0.46, APPLICABLE TO DOUGLAS FIR--SOUTH WOOD GRADE
G=0.36, APPLICABLE TO SPRUCE PINE-FIR SOUTH WOOD GRADE

Δ NOTES:

1. ABOVE INDICATED MAX. SLAT SPANS MAY BE USED AS LONG AS ANCHOR SPACING SCHEDULES ON SHEET 17 INDICATE THAT A SPACING IS AVAILABLE FOR THE CORRESPONDING SLAT SPAN AND DESIGN LOAD.

†: WOOD FRAME WALL TO BE BUILT STRICTLY IN ACCORDANCE WITH SPECS GIVEN ON DETAIL 1 AND PROVISIONS FROM CHAPTER 23 OF THE INTERNATIONAL BUILDING CODE. MIN. WALL LENGTH AT EITHER SIDE OF OPENING MUST BE 33 INCHES.

2. INSTALLATIONS VALID ONLY FOR SHUTTERS WITHOUT MULLIONS

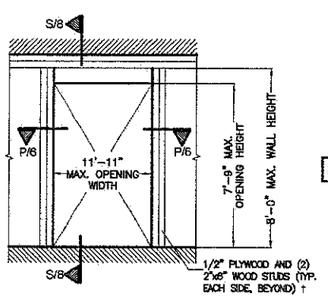

DETAIL 1 (ELEVATION)

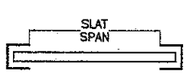

SLAT SPAN DEFINITION

INSTALLATIONS INTO WOOD FRAME STRUCTURES

STATE OF TEXAS
WALTER A. TILLIT, JR.
12/4/2012
LICENSED
PROFESSIONAL ENGINEER

TEXAS DEPARTMENT OF INSURANCE - 2006

WALTER A. TILLIT Jr. P.E.
PROFESSIONAL ENGINEER
6355 N.W. 36TH. ST., STE. 305
VIRGINIA GARDENS, FL. 33166
PHONE : (305) 871-1530 , FAX : (305) 871-1531
TEXAS LIC. # 90691
FIRM REGISTRATION # F-13790

APEX A-55 SLAT ENGAGED ROLL-UP SHUTTER

ROLLAC SHUTTER OF TEXAS, INC.
5331 ORANGE STREET
PEARLAND, TX. 77581
PHONE: (800)880-0922 FAX: (281)485-0839

REV. No	DESCRIPTION	DATE	REV. No	DESCRIPTION	DATE
1	OLD 09-056	11/29/12	3		
2			4		

DRAWN BY: I.A./A.G
11/29/12 DATE
12-173 DRAWING No
SHEET 16 OF 17

MAX. ANCHOR SPACING SCHEDULE VI FOR A GIVEN SHUTTER MOUNTING TYPE W/ ø 5/16" ELCO CONSTRUCTION PRODUCTS ULTRACON ANCHORS FOR A WOOD GRADE, DESIGN LOAD (psf) AND SLAT SPAN RANGE*

WALL MOUNT
TO 2"x6" WOOD STUD WITH MINIMUM 1/2" PLYWOOD

(SEE DETAIL 1 ON SHEET 16)

WOOD GRADE	SLAT SPAN RANGE						
	DESIGN LOAD RANGE (p.s.f.)	0' to 4' *	>4' to 5' *	>5' to 6' *	>6' to 7' *	>7' to 9' *	>9' to 10' *
SOUTHERN PINE #2 (G=0.55)	≤ 30.0	6"	6"	6"	6"	6"	6"
	40	6"	6"	6"	6"	6"	6"
	50	6"	6"	6"	6"	6"	5"
	53.3	6"	6"	6"	6"	6"	5"
DOUGLAS-FIR-SOUTH (G=0.46)	≤ 30.0	6"	6"	6"	6"	4 1/2"	3 1/2"
	40	6"	6"	6"	6"	3"	3"
SPRUCE PINE-FIR-SOUTH (G=0.36)	≤ 30.0	6"	6"	6"	6"	3 1/2"	3"

TRAPPED MOUNT
TO 2"x6" WOOD STUD WITH MINIMUM 1/2" PLYWOOD

(SEE DETAIL 1 ON SHEET 16)

WOOD GRADE	SLAT SPAN RANGE						
	DESIGN LOAD RANGE (p.s.f.)	0' to 4' *	>4' to 5' *	>5' to 6' *	>6' to 7' *	>7' to 9' *	>9' to 10' *
SOUTHERN PINE #2 (G=0.55)	≤ 30.0	6"	6"	6"	6"	6"	6"
	40	6"	6"	6"	6"	6"	6"
	50	6"	6"	6"	6"	6"	5"
	53.3	6"	6"	6"	6"	5"	5"
DOUGLAS-FIR-SOUTH (G=0.46)	≤ 30.0	6"	6"	6"	6"	6"	6"
	40	6"	6"	6"	6"	5"	4 1/2"
SPRUCE PINE-FIR-SOUTH (G=0.36)	≤ 30.0	6"	6"	6"	6"	5"	4"

BUILD-OUT MOUNT
TO 2"x6" WOOD STUD WITH MINIMUM 1/2" PLYWOOD

(SEE DETAIL 1 ON SHEET 16)

WOOD GRADE	SLAT SPAN RANGE												
	DESIGN LOAD RANGE (p.s.f.)	0' to 4' *		>4' to 5' *		>5' to 6' *		>6' to 7' *		>7' to 9' *		>9' to 10' *	
		BUILD-OUT MOUNT W/		BUILD-OUT MOUNT W/		BUILD-OUT MOUNT W/		BUILD-OUT MOUNT W/		BUILD-OUT MOUNT W/		BUILD-OUT MOUNT W/	
		E1	E	E1	E	E1	E	E1	E	E1	E	E1	E
SOUTHERN PINE #2 (G=0.55)	≤ 30.0	4"	4"	4"	4"	4"	4"	4"	4"	4"	4"	4"	4"
	40	4"	4"	4"	4"	4"	4"	4"	4"	4"	3"	4"	3"
	50	4"	4"	4"	4"	4"	4"	4"	4"	4"	3"	3"	–
	53.3	4"	4"	4"	4"	4"	4"	4"	4"	4"	3"	3"	–
DOUGLAS-FIR-SOUTH (G=0.46)	≤ 30.0	4"	4"	4"	4"	4"	4"	4"	4"	3"	3"	3"	–
	40	4"	4"	4"	4"	4"	4"	4"	4"	3"	3"	–	–
SPRUCE PINE-FIR-SOUTH (G=0.36)	≤ 30.0	4"	4"	4"	4"	4"	4"	4"	4"	3"	3"	–	–

* NOTE:
MAX. SPAN FOR SLAT FOR A GIVEN DESIGN LOAD SHALL **NEVER** EXCEED MAX. SLAT SPAN INDICATED ON SLAT PERFORMANCE CHARTS ON 16 SHEET.

STATE OF TEXAS
WALTER A. TILLIT, JR.
11/29/12
LICENSED
PROFESSIONAL ENGINEER

TEXAS DEPARTMENT OF INSURANCE – 2006

WALTER A. TILLIT Jr. P.E.
PROFESSIONAL ENGINEER
6355 N.W. 36TH. ST., STE. 305
VIRGINIA GARDENS, FL. 33166
PHONE : (305) 871-1530 , FAX : (305) 871-1531

TEXAS LIC. # 90691

FIRM REGISTRATION # F-13790

APEX A-55 SLAT ENGAGED ROLL-UP SHUTTER

ROLLAC SHUTTER OF TEXAS, INC.
5331 ORANGE STREET
PEARLAND, TX. 77581
PHONE: (800)880-0922 FAX: (281)485-0839

REV. No	DESCRIPTION	DATE	REV. No	DESCRIPTION	DATE
1	OLD 09-056	11/29/12	3		
2			4		

DRAWN BY: I.A./A.G

11/29/12 DATE

12-173 DRAWING No

SHEET 17 OF 17