TABLE 3 — ASTM Wind Zones 1, 2, 3 & 4

ACCORDION SHUTTER SPAN SCHEDULE

ASCE 7 DESIGN WIND LOAD	POSITIVE & NEGATIVE WIND LOAD ALL MOUNTING CONDITIONS
W (P.S.F.)	L max. (FT - IN)
0 to 54.3	13-0
55.0	12-11
60.0	12-4
65.0	11-10
70.0	11-5
75.0	11-0
80.0	10-8
85.0	10-4
90.0	10-1
95.0	9-10
100.0	9-7
105.0	9-4
110.0	9-1
115.0	8-11
120.0	8-9
125.0	8-6
130.0	8-4
135.0	8-3
140.0	7-11
145.0	7-8
150.0	7-5
155.0	7-2
160.0	6-11
165.0	6-9
170.0	6-6
175.0	6-4
180.0	6-2
185.0	6-0
190.0	5-10
195.0	5-8
200.0	5-6

TABLES 3 & 4 NOTES:

1. WIND LOADS: DETERMINE POSITIVE AND NEGATIVE WIND LOADS FROM ASCE 7.
2. SPAN: IN TABLE 3, ENTER NEGATIVE WIND LOAD ONLY, DETERMINED FROM ASCE 7, THEN MOVE ACROSS TO SELECT THE ALLOWABLE SHUTTER SPAN (BLADE LENGTH).
3. REVERSING: THE 6.8 SYSTEM MAY BE MOUNTED WITH THE INSIDE AND OUTSIDE OF THE SHUTTER BEING REVERSED. FOR EXAMPLE: IT IS PERMISSIBLE TO MOUNT ON THE INSIDE OF A WOOD OR CONCRETE BEAM WITH THE BACK OF THE SLAT FACING OUTWARD. FOR THIS CONDITION, IN ASTM WIND ZONE 4, USE THE APPROPRIATE POSITIVE LOAD/NEGATIVE LOAD AND SHUTTER SPANS IN THE APPROPRIATE POSITIVE COLUMN OF TABLE 4.
4. SEPARATION TO GLASS: (TABLE 4) IS NOT REQUIRED IN WIND ZONES 1 THRU 3 (140 MPH WIND SPEED OR LESS). SEPARATION FROM GLASS TABLE 4 IS REQUIRED FOR WIND ZONE 4 (141 MPH OR GREATER WIND SPEEDS). ENTER TABLE 4 WITH THE DESIGN POSITIVE LOAD AND READ ACROSS TO THE SEPARATION FROM GLASS VALUE IN COLUMNS 1 OR 2 (WHICHEVER IS APPROPRIATE).
5. FOR DESIGN WIND LOADS BETWEEN TABULATED VALUES, USE THE NEXT HIGHER LOAD OR USE LINEAR INTERPOLATION TO DETERMINE ALLOWABLE SHUTTER SPAN.

eyewall Armor™
HURRICANE PROTECTION

TABLE 4 — ASTM Wind Zone 4 - ONLY

MINIMUM SHUTTER SEPARATION FROM GLASS

POSITIVE DESIGN LOAD	ACTUAL SHUTTER SPAN	MIN. SEPARATION FROM GLASS FOR INSTALLATIONS ≤ 30'-0" ABOVE GRADE	MIN. SEPARATION FROM GLASS FOR INSTALLATIONS > 30'-0" ABOVE GRADE
(W) (P.S.F.)	(L) (FT - IN)	(IN.)	(IN.)
30.0	5-0	3	1
	8-3	2-1/4	1-3/8
	10-0	2-1/4	1-3/4
	13-0	3-3/4	3-1/2
40.0	5-0	3	1-1/8
	8-3	2-1/4	1-1/2
	9-0	2-1/4	1-3/4
	10-0	2-1/4	2-1/8
	11-0	3-3/4	2-5/8
	13-0	4-1/4	4-1/4
50.0	5-0	3	1-1/8
	8-3	2-1/4	1-5/8
	9-0	2-1/4	2
	10-0	2-3/8	2-3/8
	11-0	3-3/4	3-1/8
	13-0	5-1/8	5-1/8
60.0	5-0	3	1-1/8
	8-3	2-1/4	1-3/4
	9-0	2-1/4	2-1/8
	10-0	2-3/4	2-3/4
	12-4	5	5
70.0	5-0	3	1-1/8
	7-0	2-1/4	1-1/2
	8-3	2-1/4	1-3/4
	11-5	4-1/2	4-1/2
90.0	5-0	3	1-1/8
	7-0	2-1/4	1-5/8
	8-3	2-1/4	2-1/4
	10-1	3-3/4	3-5/8
110.0	5-0	3	1-1/4
	7-0	2-1/4	1-3/4
	8-3	2-1/2	2-1/2
	9-1	3-1/4	3-1/4
120.0	5-0	3	1-1/4
	7-0	2-1/4	1-3/4
	8-3	2-5/8	2-5/8
	8-9	3	3

KNEZEVICH ASSOCIATES
Consulting Engineers
Texas Registered Engineering Firm No. F-11225
2590 S.W. 105th Terrace * Davie, Florida 33324
T (954) 821-6933 * F (954) 452-7960
email: VJK@Knezevich.com

Copyright © 2009 VJKnezevich & Associates, LLC d/b/a Knezevich Associates

6.8 ACCORDION SHUTTER

Town&Country INDUSTRIES
Wholesale Aluminum and Building Products
A DIVISION OF ABC SUPPLY CO., INC.
400 WEST MCNAB ROAD * FORT LAUDERDALE, FL 33309
PHONE 954.970.9999 * FAX 954-970-9988

revisions

no	date	by	description
1	5/28/2009	VJK	REVISE ENGINEER LICENSE INFORMATION
2	5/29/2009	VJK	GENERAL NOTES

V.J. Knezevich
Professional Engineer
Texas License No.: PE 102908
VLADIMIR J. KNEZEVICH
MAY 29 2009
NOT VALID UNLESS SEALED

date 04/27/2009

drawing no.
08-363

sheet 1 of 11

GENERAL NOTES:

1. THE ACCORDION SHUTTER ON THESE PRODUCT EVALUATION DOCUMENTS HAS BEEN VERIFIED FOR COMPLIANCE WITH THE 2006 INTERNATIONAL BUILDING CODE (IBC) AND THE INTERNATIONAL RESIDENTIAL CODE (IRC) WITH TEXAS REVISIONS EFFECTIVE JANUARY 1, 2008. THE ACCORDION SHUTTER IS ACCEPTABLE FOR THE SEAWARD AND INLAND AREAS, AS DEFINED BY THE TEXAS DEPARTMENT OF INSURANCE. THE FOLLOWIG CONDITIONS WILL APPLY:

2. NO INCREASE IN ALLOWABLE STRESS HAS BEEN USED IN THE DESIGN OF THESE PRODUCTS. WIND LOAD DURATION FACTOR Cd = 1.6 WAS USED FOR WOOD LAG SCREW DESIGN.

3. THIS SHUTTER SYSTEM HAS BEEN TESTED FOR LARGE MISSILE IMPACT RESISTANCE AND CYCLIC PRESSURE LOADIGS IN CONFORMANCE WITH ASTM E1886 AND E1996 STANDARDS FOR UNIFORM STATIC AIR PRESSURE IN CONFORMANCE WITH ASTM E330.

4. DETERMINE THE POSITIVE AND NEGATIVE DESIGN LOADS TO USE WHEN REFERENCING THESE DOCUMENTS IN ACCORDANCE WITH THE GOVERNING CODE AND GOVERNING WIND VELOCITY. FOR WIND LOAD CALCULATIONS IN ACCORDANCE WITH ASCE 7, A DIRECTIONALITY FACTOR OF Kd =0.85 SHALL BE USED.

5. THESE APPROVAL DOCUMENTS ARE GENERIC AND DO NOT INCLUDE INFORMATION FOR SITE-SPECIFIC APPLICATION OF THIS SHUTTER SYSTEM.

6. THESE APPROVAL DOCUMENTS ARE SUITABLE TO BE APPLIED BY THE CONTRACTOR PROVIDED THE CONTRACTOR DOES NOT DEVIATE FROM THE CONDITIONS DETAILED HEREIN AND THE CONTRACTOR VERIFIES THAT THE EXISTING STRUCTURE DOES NOT DEVIATE IN EITHER FORM OR MATERIAL FROM THE STRUCTURAL SUBSTRATES DETAILED HEREIN.

7. ANY MODIFICATIONS OR ADDITIONS TO THESE APPROVAL DOCUMENTS WILL VOID THE APPROVAL DOCUMENTS.

8. WHEN THE SITE CONDITIONS DEVIATE FROM THESE APPROVAL DOCUMENTS, THE BUILDING OFFICIAL MAY REQUIRE THAT SITE SPECIFIC DOCUMENTS BE PREPARED, SIGNED, DATED AND SEALED BY A LICENSED ENGINEER OR REGISTERED ARCHITECT, WHICH DETAIL AND JUSTIFY THE DEVIATION,. AS A CONDITION TO THE BUILDING OFFICIAL GRANTING HIS/HER APPROVAL.

9. EACH SHUTTER ASSEMBLY SHALL HAVE A LABEL THAT READS AS FOLLOWS:
TOWN & COUNTRY INDUSTRIES, FORT LAUDERDALE, FL
ACCORDION SHUTTER
MISSILE LEVEL D - ASTM E1886, E1996 & E330
TDI EVALUATED

10. ALL EXTRUSIONS SHOWN SHALL BE 6063-T6 ALUMINUM ALLOY, U.O.N., WITH A MINIMUM Fy OF 25 K.S.I.

11. ALL BOLTS AND WASHERS (EXCLUDING INSTALLATION) SHALL BE STAINLESS STEEL WITH A MINIMUM TENSILE STRENGTH OF 60 K.S.I., U.O.N. POP RIVETS SHALL BE 1/4"ϕ OR 3/16"ϕ 5052 ALUM. ALLOY.

12. ALL SHUTTERS SHALL HAVE A LOCKING MECHANISM CONSISTING OF THUMBSCREW, PUSH LOCK OR BOX LOCK AT CENTER OR SIDE CLOSURE.

13. TOP AND BOTTOM DETAILS MAY BE INTERCHANGED AS FIELD CONDITIONS REQUIRE. SEE PAGE 5 FOR LOCK LOCATIONS AND DETAILS.

14. FLOOR TRACKS MAY BE REMOVABLE AT NON-STACKING LOCATIONS. USE REMOVABLE ANCHORS.

15. THE ACCORDION SHUTTERS MAY BE MOUNTED WITH THE INSIDE AND OUTSIDE OF SHUTTER BEING REVERSED. FOR EXAMPLE: IT IS PERMISSIBLE TO MOUNT EXTRUSIONS ON INSIDE OF WOOD OR CONCRETE BEAM WITH BACK OF SHUTTER FACING OUTSIDE (SEE PAGE 5 - TYPICAL PLAN VIEW).

16. DETAIL 5 , 16 & 27 ON PAGE 3 TO 4, MAY BE BENT TO FORM A CURVE WITH A MIN. RADIUS OF 10".

17. ALL DIMENSIONS SHOWN INCLUDE POWDER COATING FINISH.

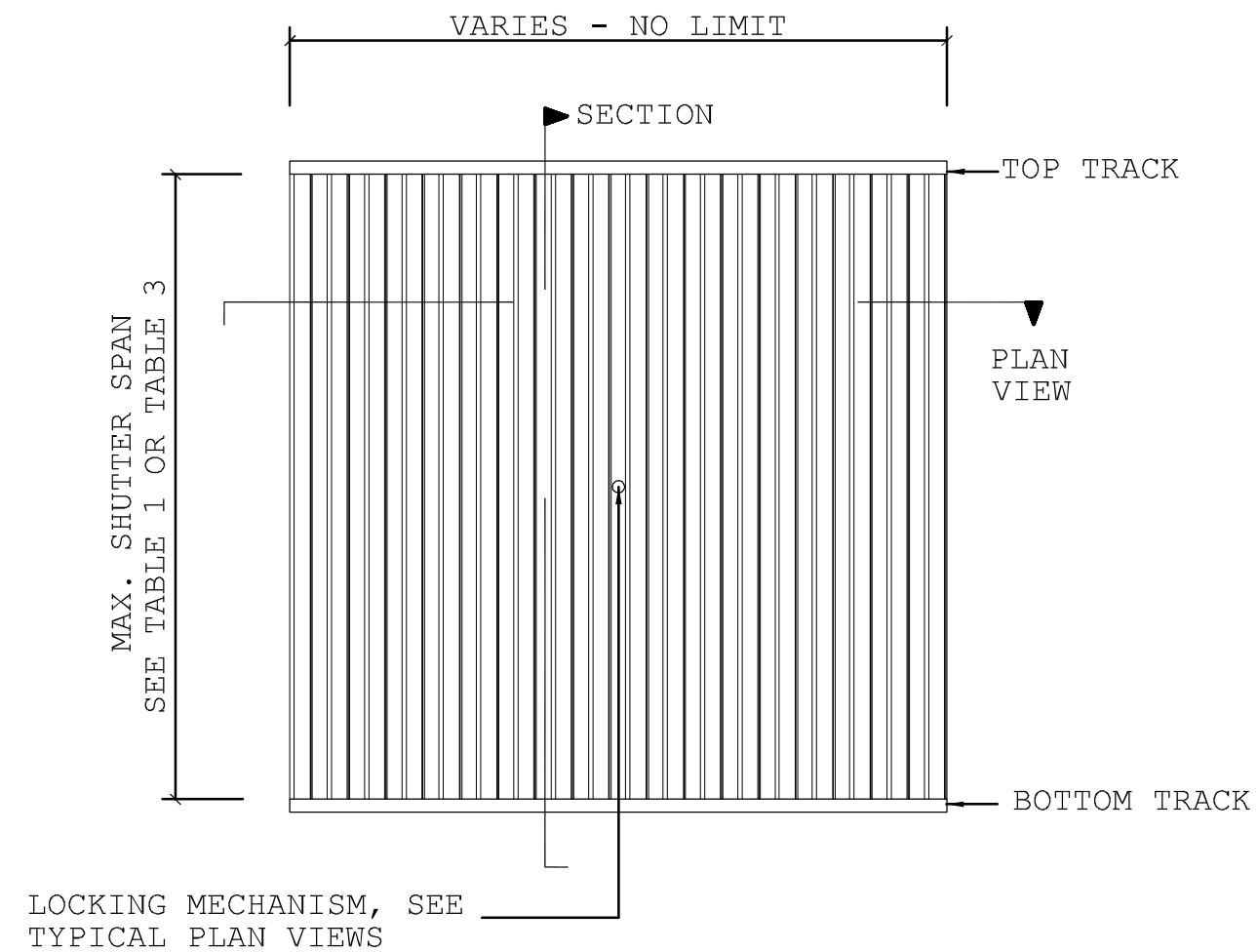

TYPICAL ACCORDION SHUTTER ELEVATION

N.T.S.

KNEZEVICH ASSOCIATES
Consulting Engineers
Texas Registered Engineering Firm No. F-11225
2590 S.W. 105th Terrace * Davie, Florida 33324
T (954) 821-6933 * F (954) 452-7960
email: VJK@Knezevich.com

Copyright © 2009 VJKnezevich & Associates, LLC d/b/a Knezevich Associates

6.8 ACCORDION SHUTTER

Town&Country INDUSTRIES
Wholesale Aluminum and Building Products
A DIVISION OF ABC SUPPLY CO., INC.
400 WEST MCNAB ROAD * FORT LAUDERDALE, FL 33309
PHONE 954.970.9999 * FAX 954-970-9988

revisions

no	date	by	description
1	05/28/2009	VJK	REVISE ENGINEER LICENSE INFORMATION
2	05/29/2009	VJK	GENERAL NOTES

V.J. Knezevich
Professional Engineer
Texas License No.: PE 102908

STATE OF TEXAS
VLADIMIR J. KNEZEVICH
MAY 29 2009
LICENSED
PROFESSIONAL ENGINEER

scale ARV 1 = AS NOTED
date 04/27/2009
drawing no.
08-363
sheet 2 of 11

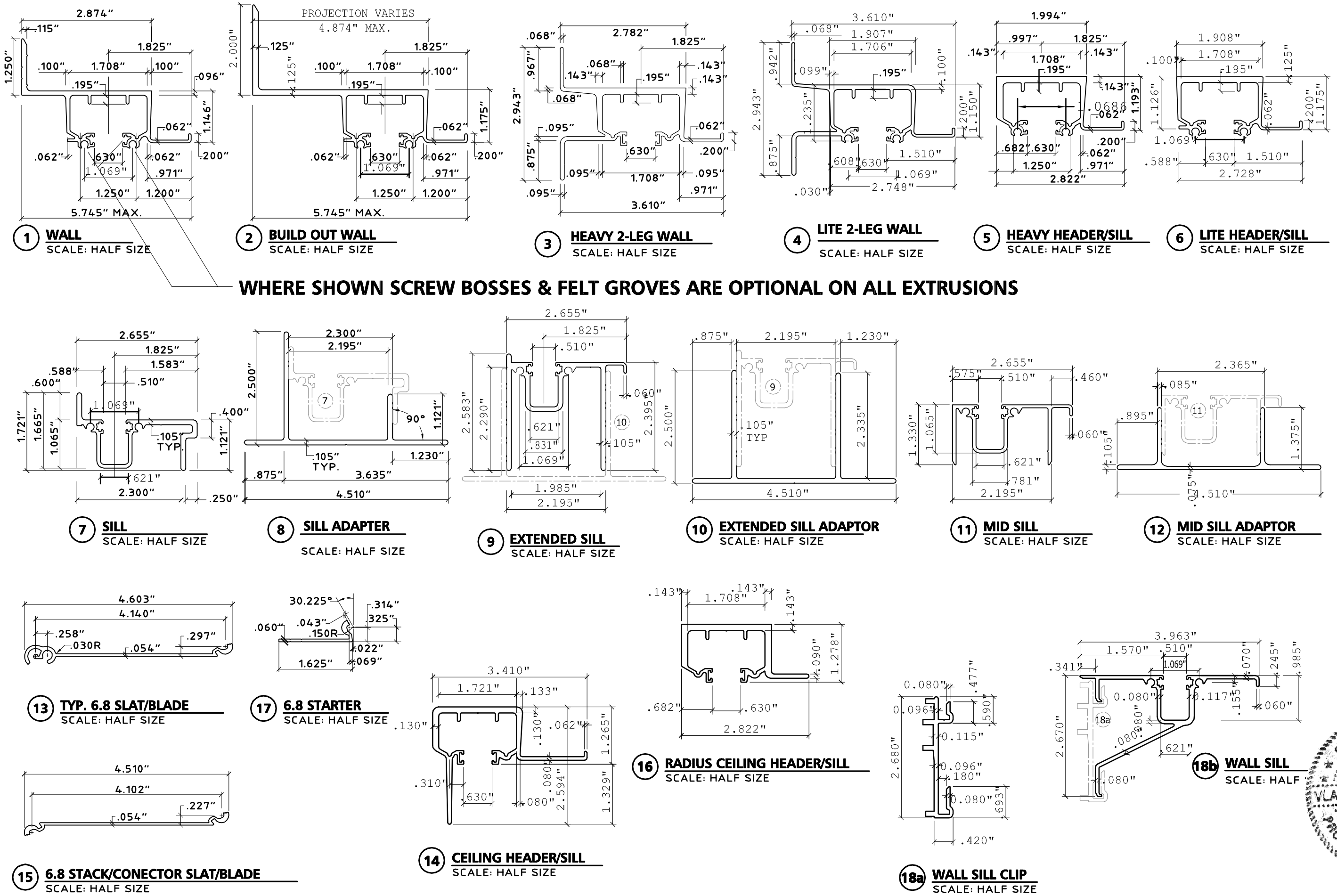
1 WALL
SCALE: HALF SIZE
2 BUILD OUT WALL
SCALE: HALF SIZE
3 HEAVY 2-LEG WALL
SCALE: HALF SIZE
4 LITE 2-LEG WALL
SCALE: HALF SIZE
5 HEAVY HEADER/SILL
SCALE: HALF SIZE
6 LITE HEADER/SILL
SCALE: HALF SIZE
WHERE SHOWN SCREW BOSSES & FELT GROVES ARE OPTIONAL ON ALL EXTRUSIONS
7 SILL
SCALE: HALF SIZE
8 SILL ADAPTER
SCALE: HALF SIZE
9 EXTENDED SILL
SCALE: HALF SIZE
10 EXTENDED SILL ADAPTOR
SCALE: HALF SIZE
11 MID SILL
SCALE: HALF SIZE
12 MID SILL ADAPTOR
SCALE: HALF SIZE
13 TYP. 6.8 SLAT/BLADE
SCALE: HALF SIZE
17 6.8 STARTER
SCALE: HALF SIZE
15 6.8 STACK/CONECTOR SLAT/BLADE
SCALE: HALF SIZE
14 CEILING HEADER/SILL
SCALE: HALF SIZE
16 RADIUS CEILING HEADER/SILL
SCALE: HALF SIZE
18a WALL SILL CLIP
SCALE: HALF SIZE
18b WALL SILL
SCALE: HALF

KNEZEVICH ASSOCIATES
Consulting Engineers
Texas Registered Engineering Firm No. F-11225
2590 S.W. 105th Terrace * Davie, Florida 33324
T (954) 821-6933 * F (954) 452-7960
email: VJK@Knezevich.com

Copyright © 2009 VJKnezevich & Associates, LLC d/b/a Knezevich Associates

6.8 ACCORDION SHUTTER

Town&Country INDUSTRIES
Wholesale Aluminum and Building Products
A DIVISION OF ABC SUPPLY CO., INC.
400 WEST MCNAB ROAD * FORT LAUDERDALE, FL 33309
PHONE 954.970.9999 * FAX 954-970-9988

revisions

no	date	by	description
1	04/28/2009	VJK	REVISE ENGINEER LICENSE INFORMATION
2	05/29/2009	VJK	GENERAL NOTES

V.J. Knezevich
Professional Engineer
Texas License No.: PE 102908

STATE OF TEXAS
VLADIMIR J. KNEZEVICH
MAY 29 2009
LICENSED PROFESSIONAL ENGINEER

ARV AS NOTED
01/27/2009

drawing no.
08-363

sheet 3 of 11

C:_MiDi_Projects\MiDisparate_CAD\VJKnezevich\CAD2008\Town_and_Country\08-363\R2-sub\08-363-03.dwg, 6/4/2009 3:42:18 PM, 11 x 17, 1:1, www.MiDisparate.com

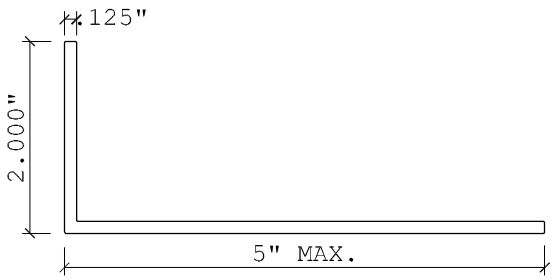

19 ANGLE
SCALE: HALF SIZE

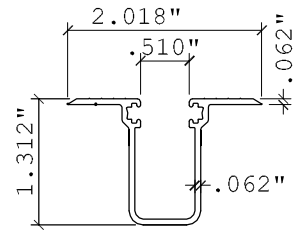

20 RECESS SILL
SCALE: HALF SIZE

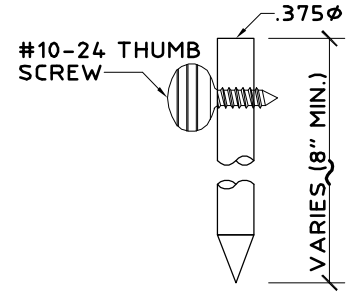

FOR USE WITH 33 AND 34 ONLY

21 SLIDE ROD
SCALE: HALF SIZE

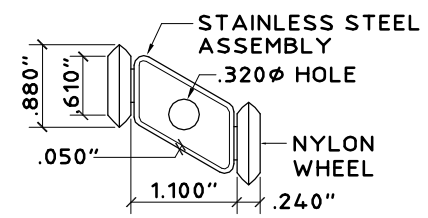

TYP. AT EVERY OTHER INSIDE JOINT AT TOP.

22 ROLLER ASSEMBLY
SCALE: HALF SIZE

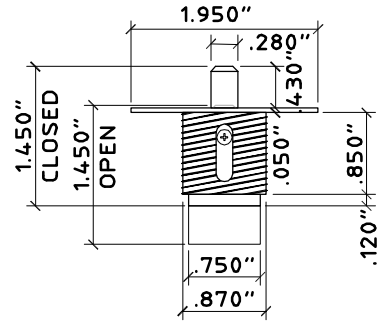

CYLINDER-SOLID BRASS, NICKEL PLATED
HOUSING-ZINC DICAST,POWDER COATED
NOTE: MAY BE KEY OPERATED OUTSIDE OR THUMB TURN OPERATED INSIDE.

23 BRASS PUSH LOCK
SCALE: HALF SIZE

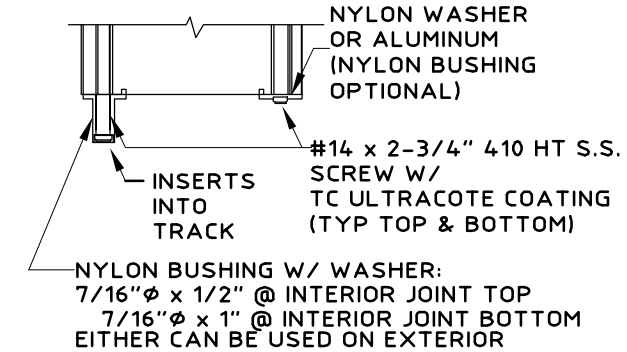

24 BUSHING ASSEMBLY DETAIL
SCALE: HALF SIZE

WHERE LOCK PINS ARE USED, THEY ARE ENGAGED IN THE STACKED POSITION & AREN'T REQ'D IN THE CLOSED POSITION.

25 OPTIONAL ALUMINUM OR PVC LOCK PIN FOR 29A+29B
SCALE: HALF SIZE

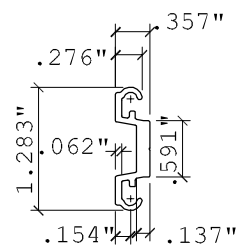

26 BOX CENTER INSERT
SCALE: HALF SIZE

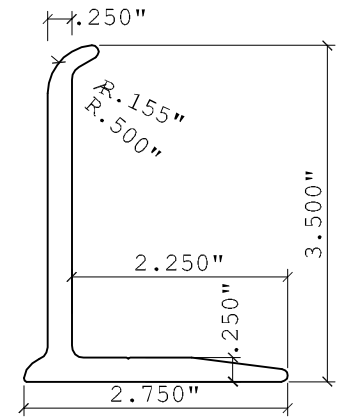

27 RAINGUARD
SCALE: HALF SIZE

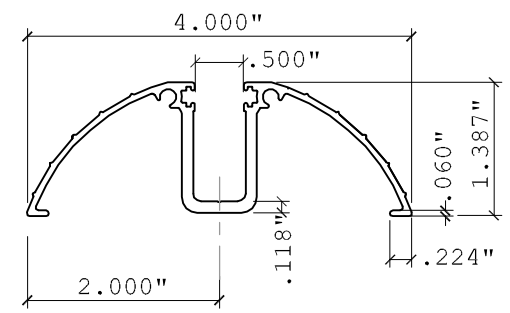

28 DECORATIVE FLOOR TRACK
SCALE: HALF SIZE

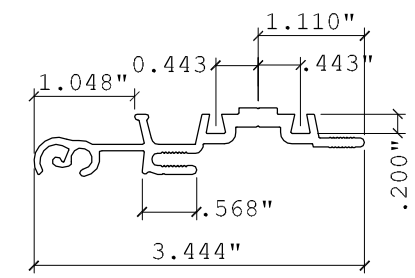

29a OLD 6.8 CENTER MATE
SCALE: HALF SIZE

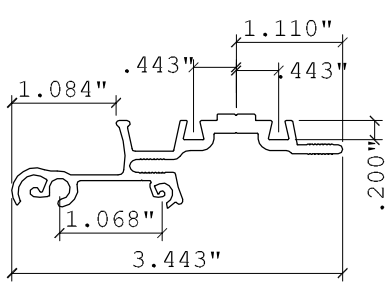

29b 2003 6.8 CENTER MATE
SCALE: HALF SIZE

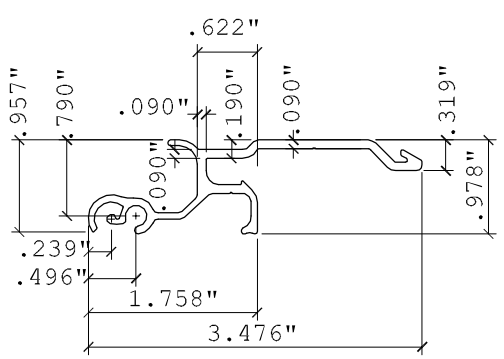

30 UNIMATE LOCK
SCALE: HALF SIZE

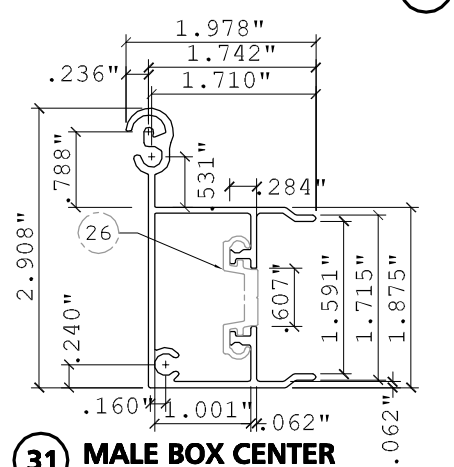

31 MALE BOX CENTER
SCALE: HALF SIZE

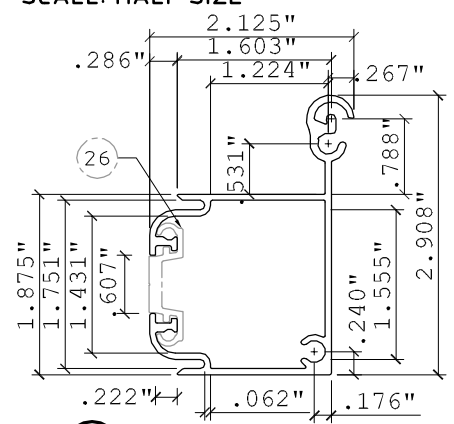

32 FEMALE BOX CENTER
SCALE: HALF SIZE

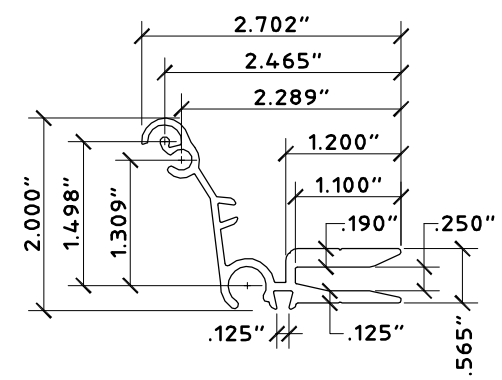

33 OUTSIDE CENTER MATE
SCALE: HALF SIZE

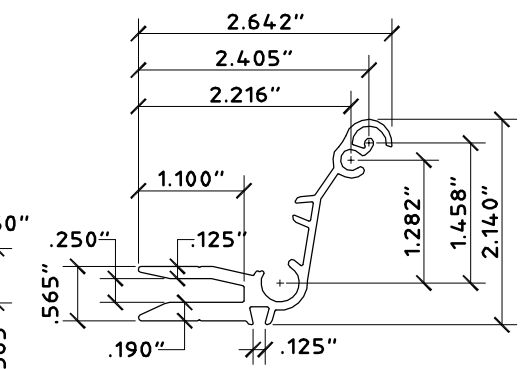

34 INSIDE CENTER MATE
SCALE: HALF SIZE

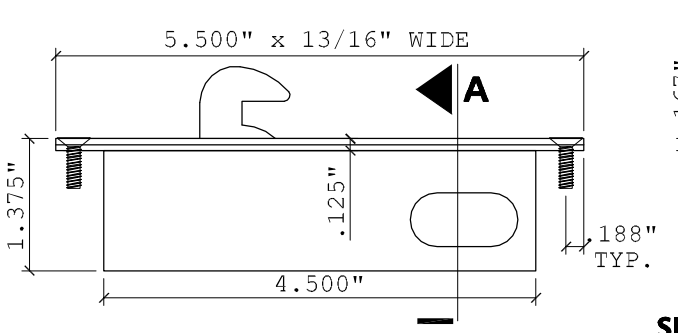

DELTA MODEL 2022 INDUSTRIAL SYSTEMS

35 BOX LOCK
SCALE: HALF SIZE

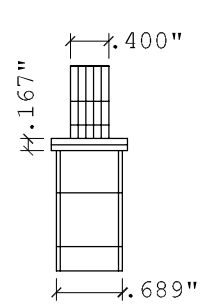

SECTION A

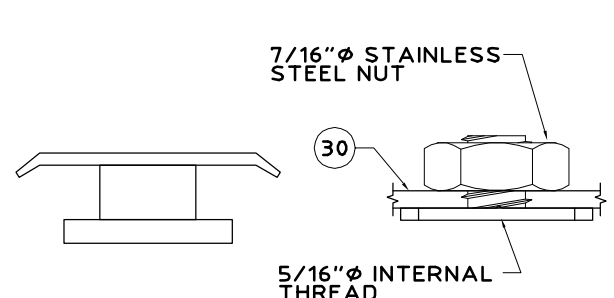

POWDER COATED, ZINC DIE-CAST

36 T-LOCK ADAPTER (OPTIONAL)
SCALE: HALF SIZE

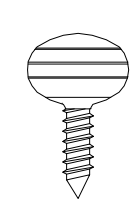

HEAD STYLE VARIES

1/4-20x1 OR 5/16-18x1 MACHINE SCREW STAINLESS STEEL

37 T-SCREW INSERT
SCALE: FULL SIZE

38 THUMB SCREW
SCALE: FULL SIZE

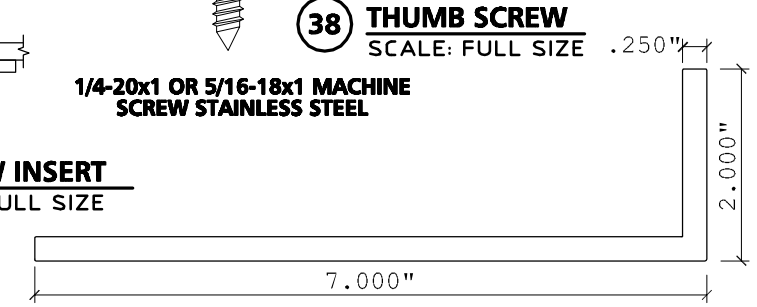

39 2X7 ANGLE
SCALE: HALF SIZE

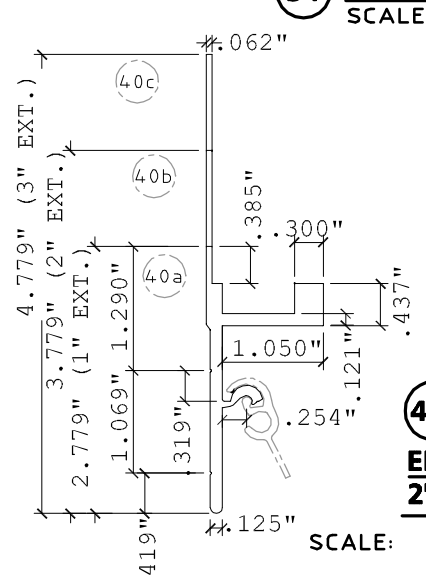

40a 40b 40c END STRIP 1" 2" & 3" EXT
SCALE: HALF SIZE

KNEZEVICH ASSOCIATES
Consulting Engineers
Texas Registered Engineering Firm No. F-11225
2590 S.W. 105th Terrace * Davie, Florida 33324
T (954) 821-6933 * F (954) 452-7960
email: VJK@Knezevich.com

Copyright © 2009 VJKnezevich & Associates, LLC d/b/a Knezevich Associates

6.8 ACCORDION SHUTTER

Town & Country INDUSTRIES
Wholesale Aluminum and Building Products
A DIVISION OF ABC SUPPLY CO., INC.
400 WEST MCNAB ROAD * FORT LAUDERDALE, FL 33309
PHONE 954.970.9999 * FAX 954-970-9988

revisions

no	date	by	description
1	4/28/2009	VJK	REVISE ENGINEER LICENSE INFORMATION
2	5/29/2009	VJK	GENERAL NOTES

V.J. Knezevich
Professional Engineer
Texas License No.: PE 102908

STATE OF TEXAS
VLADIMIR J. KNEZEVICH
PROFESSIONAL ENGINEER
MAY 29 2009

date: 4/27/2009
drawing no.
08-363
sheet 4 of 11

C:_MiDi_Projects\MiDisparate_CAD\VJKnezevich\CAD2008\Town_and_Country\08-363\R2-sub\08-363-04.dwg, 6/4/2009 3:42:39 PM, 11 x 17, 1:1, www.MiDisparate.com

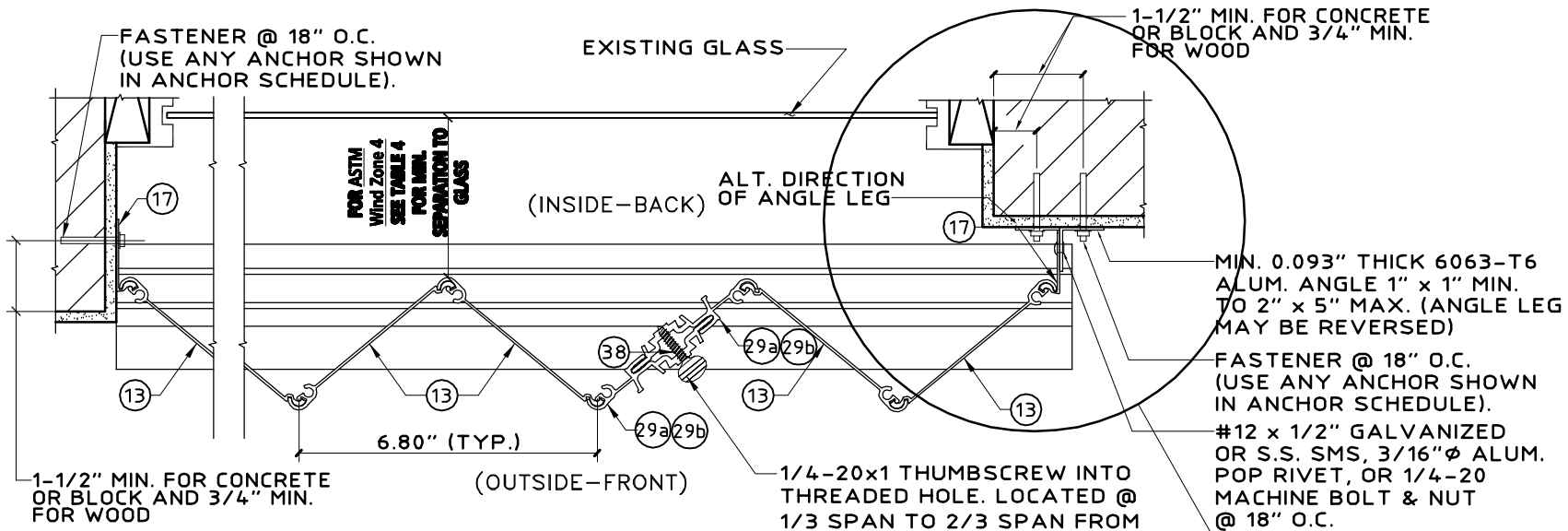

TYPICAL PLAN VIEW
SCALE: 3" = 1'-0"

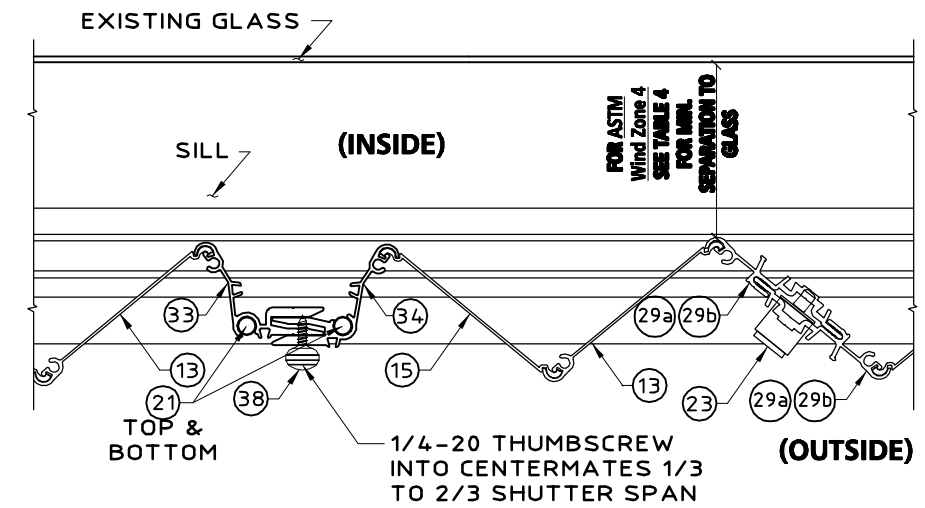

MULTIPLE SHUTTER ASSEMBLY
SCALE: 3" = 1'-0"

LOCKING DETAILS FOR
CENTER MATES
SHOWN ON RANDOM
DETAILS

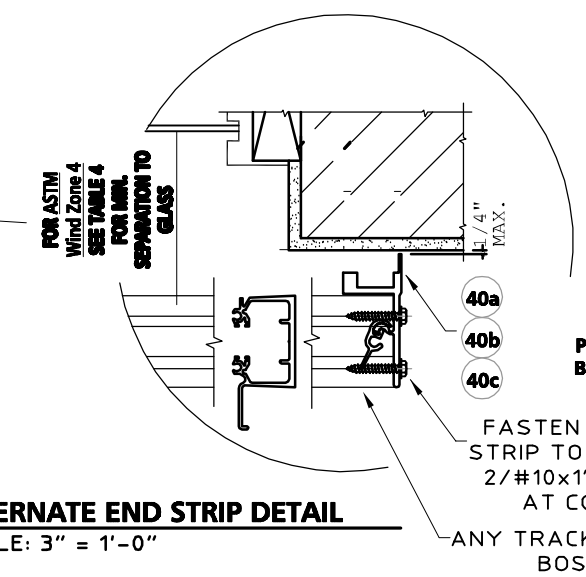

SEE END STRIP SCHEDULE
FOR MAX. SPAN WHEN
USING 40a, 40b OR 40c

USE APPROPRIATE STARTER STRIP TO PROVIDE CLOSURE FOR BUILDING CONDITIONS.

ALTERNATE END STRIP DETAIL
SCALE: 3" = 1'-0"

END STRIP SCHEDULE

	PSF	SPAN
1"B/O (2.7") 40a	62	108.1
	72	100.3
	82	94
	112	80.4
	132	76.1
2"B/O (3.7") 40b	62	99.8
	72	92.6
	82	86.7
3"B/O (4.7") 40c	62	92.7
	72	86
	82	80.6

FOR GREATER SPANS OR LOADS THAN SHOWN IN TABLE ABOVE, END STRIPS REQUIRE A 1"X1" .090" CLIP ANGLE MID SPAN USING ANY ANCHOR ON THE ANCHOR SCHEDULE & #14x3/4" TEK SCREW OR 1/4-20 BOLT TO END STRIP.

USE (1) BRASS PUSH LOCK
OR (1) 5/16-18 THUMB
SCREW INTO THREADED
INSERT (37) AT 1/3 SPAN
TO 2/3 SPAN FROM
BOTTOM OF SHUTTER

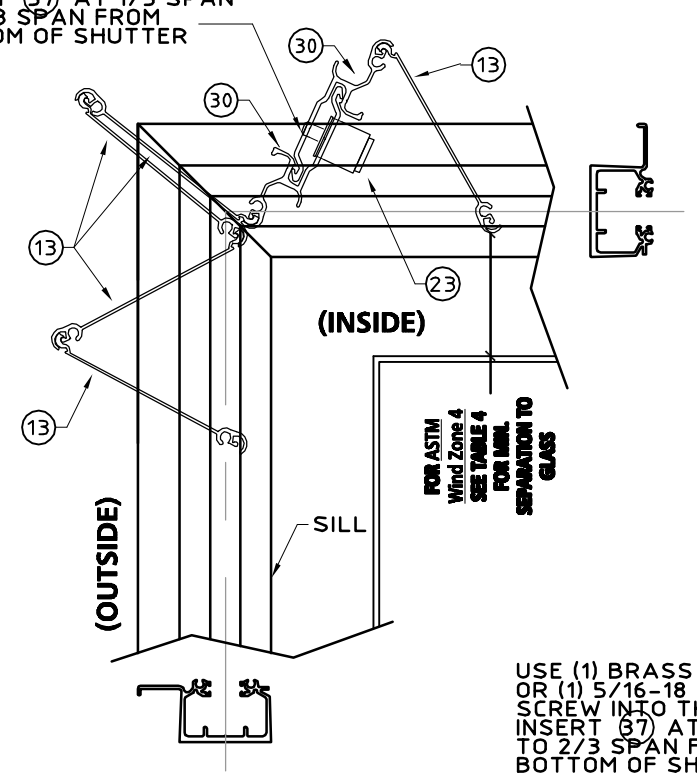

CC1 TYPICAL OUTSIDE CORNER CLOSURE DETAILS WO/CORNER POST
NTS

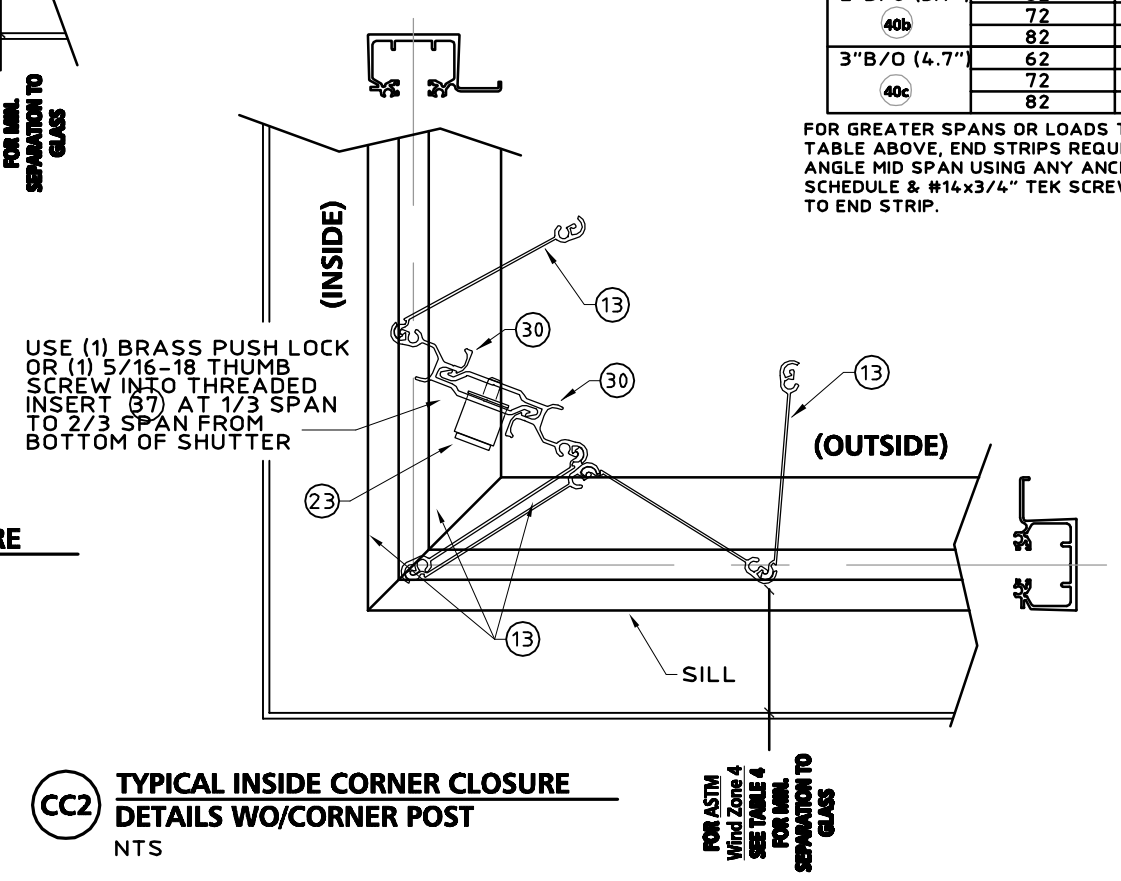

USE (1) BRASS PUSH LOCK
OR (1) 5/16-18 THUMB
SCREW INTO THREADED
INSERT (37) AT 1/3 SPAN
TO 2/3 SPAN FROM
BOTTOM OF SHUTTER

CC2 TYPICAL INSIDE CORNER CLOSURE DETAILS WO/CORNER POST
NTS

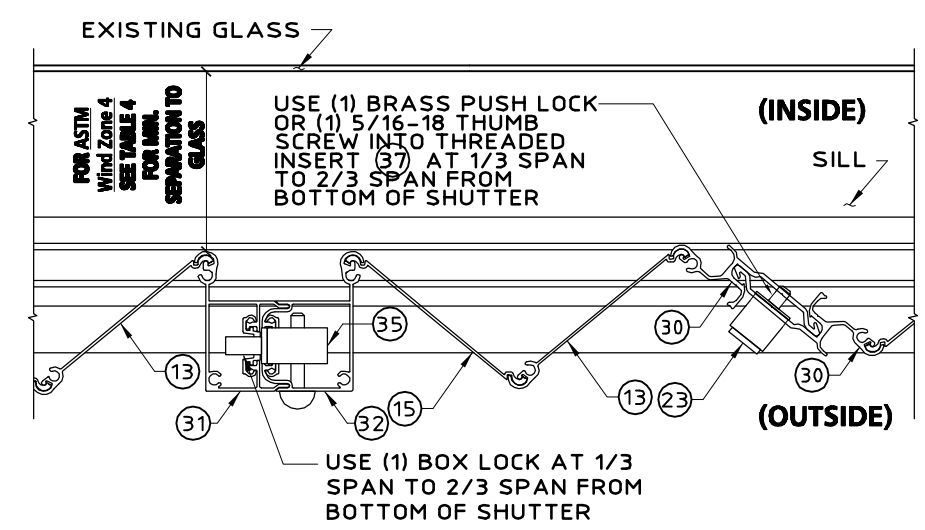

MULTIPLE SHUTTER ASSEMBLY
SCALE: 3" = 1'-0"

KNEZEVICH ASSOCIATES
Consulting Engineers
Texas Registered Engineering Firm No. F-11225
2590 S.W. 105th Terrace * Davie, Florida 33324
T (954) 821-6933 * F (954) 452-7960
email: VJK@Knezevich.com

Copyright © 2009 VJKnezevich & Associates, LLC d/b/a Knezevich Associates

6.8 ACCORDION SHUTTER

Town&Country INDUSTRIES
Wholesale Aluminum and Building Products
A DIVISION OF ABC SUPPLY CO., INC.
400 WEST MCNAB ROAD * FORT LAUDERDALE, FL. 33309
PHONE 954.970.9999 * FAX 954-970-9988

revisions

no	date	by	description
1	5/28/2009	VJK	REVISE - ENGINEER LICENSE INFORMATION
2	5/29/2009	VJK	GENERAL NOTES

V.J. Knezevich
Professional Engineer
Texas License No.: PE 102908
MAY 29 2009

scale: AS NOTED
date: 05/27/2009
drawing no.
08-363
sheet 5 of 11

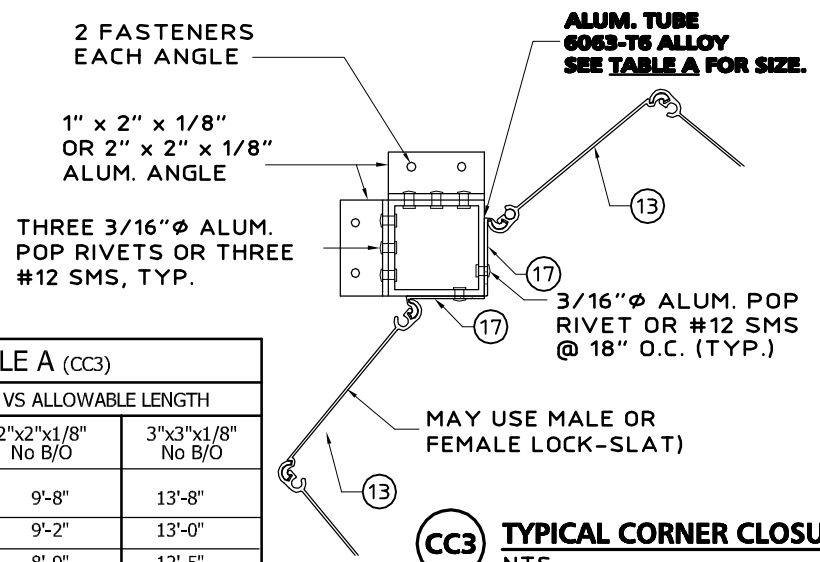

TABLE A (CC3)		
PRESSURE VS ALLOWABLE LENGTH		
PSF	2"x2"x1/8" No B/O	3"x3"x1/8" No B/O
62	9'-8"	13'-8"
72	9'-2"	13'-0"
82	8'-9"	12'-5"
92	8'-5"	11'-11"
102	8'-2"	11'-7"
120	7'-9"	10'-11"
150	7'-2"	10'-2"
200	6'-6"	9'-3"

CC3 TYPICAL CORNER CLOSURE DETAILS
NTS

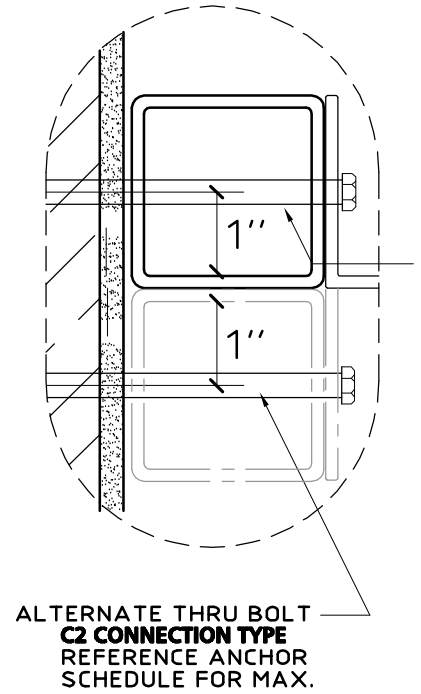

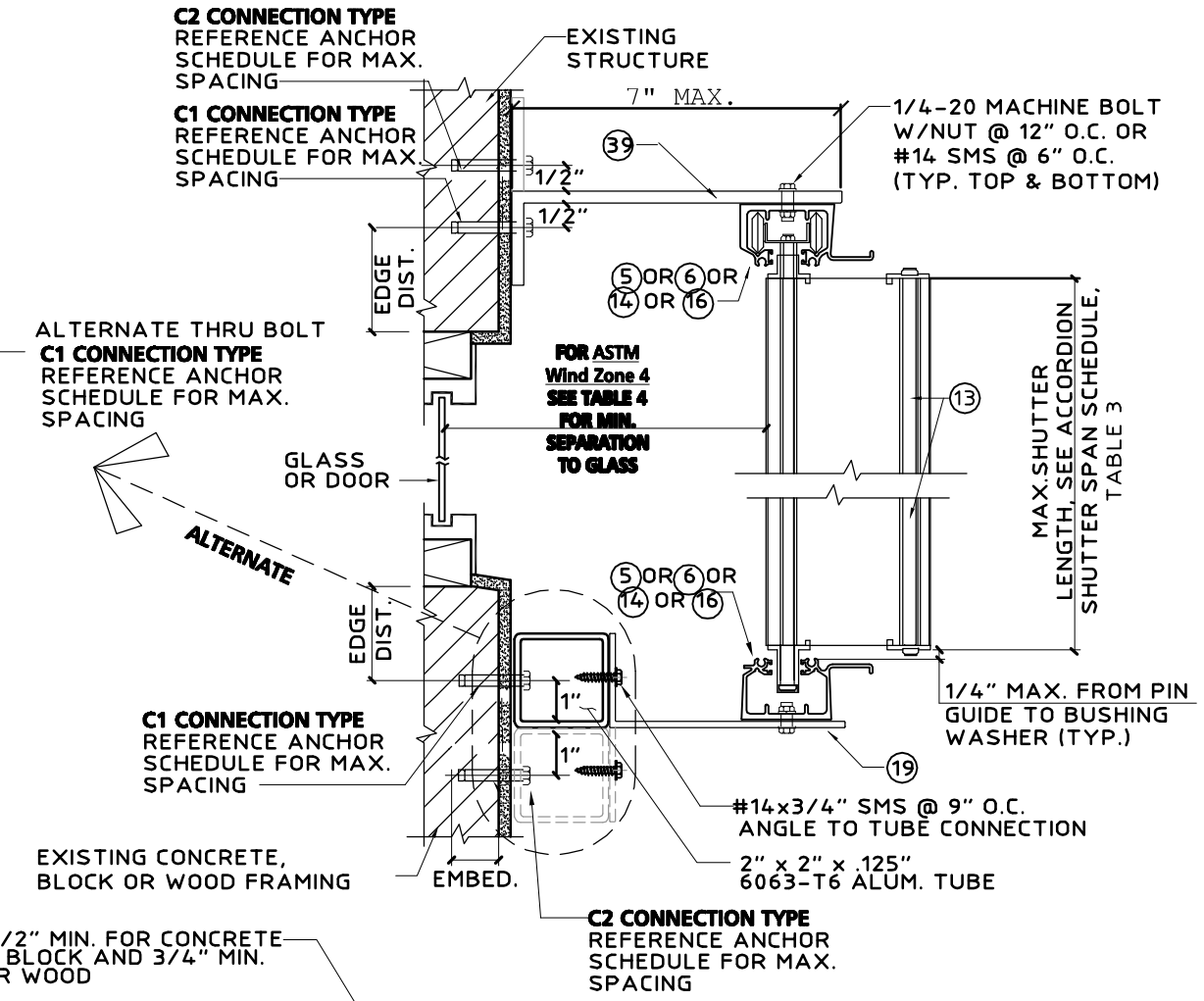

Cb ALTERNATE BUILD OUT MOUNT SECTION
SCALE : 3"= 1'- 0"

TABLE B (CC4)		
PRESSURE VS ALLOWABLE LENGTH		
PSF	2"x2"x1/8" WITH B/O	3"x3"x1/8" WITH B/O
62	8'-3"	12'-4"
72	7'-10"	11'-9"
82	7'-6"	11'-3"
92	7'-3"	10'-10"
102	7'-0"	10'-5"
120	6'-7"	9'-11"
150	6'-2"	9'-2"
200	5'-7"	8'-4"

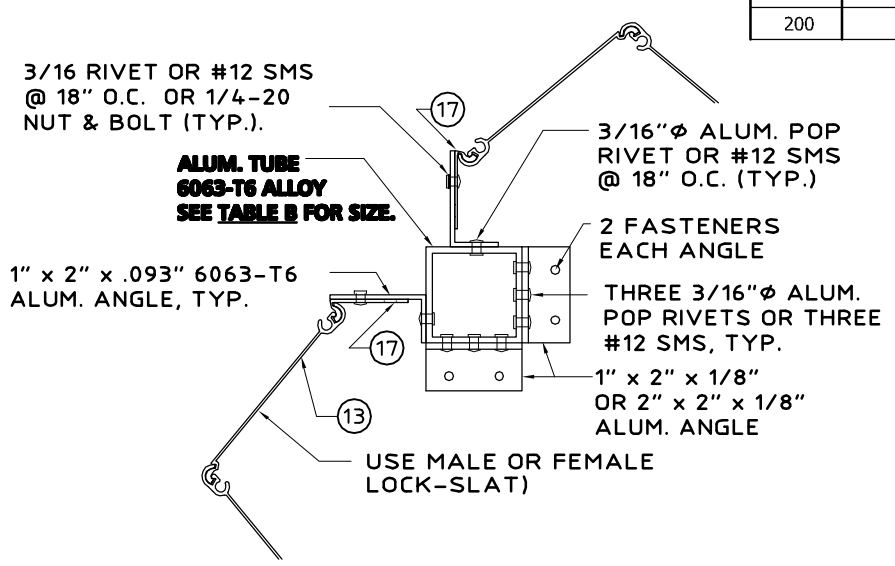

CC4 TYPICAL CORNER CLOSURE DETAILS
NTS

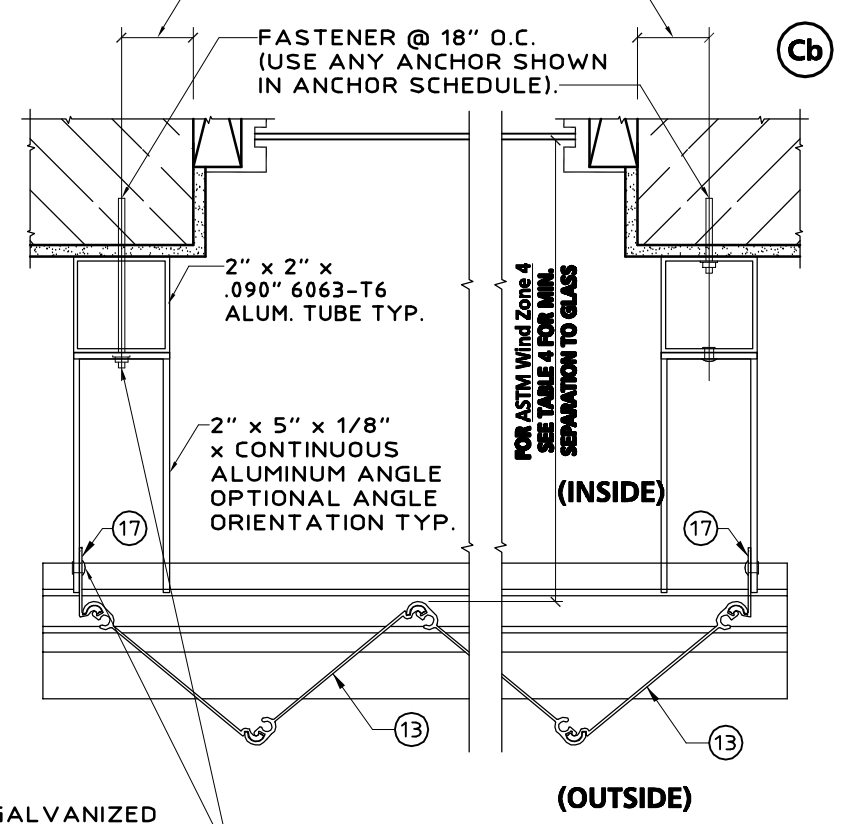

SIDE CLOSURE OPTIONS
SCALE: 3" = 1'-0"

KNEZEVICH ASSOCIATES
Consulting Engineers
Texas Registered Engineering Firm No. F-11225
2590 S.W. 105th Terrace * Davie, Florida 33324
T (954) 821-6933 * F (954) 452-7960
email: VJK@Knezevich.com

Copyright © 2009 VJKnezevich & Associates, LLC d/b/a Knezevich Associates

6.8 ACCORDION SHUTTER

Town&Country INDUSTRIES
Wholesale Aluminum and Building Products
A DIVISION OF ABC SUPPLY CO., INC.
400 WEST MCNAB ROAD * FORT LAUDERDALE, FL 33309
PHONE 954.970.9999 * FAX 954-970-9988

revisions

no	date	by	description
1	05/28/2009	VJK	REVISE ENGINEER LICENSE INFORMATION
2	06/29/2009	VJK	GENERAL NOTES

STATE OF FLORIDA
V.J. Knezevich
Professional Engineer
Texas License No.: PE 102908
VLADIMIR J. KNEZEVICH
MAY 29 2009
LICENSED PROFESSIONAL ENGINEER

drawn by: ARV
scale: AS NOTED
05/27/2009
drawing no.
08-363
sheet 6 of 11

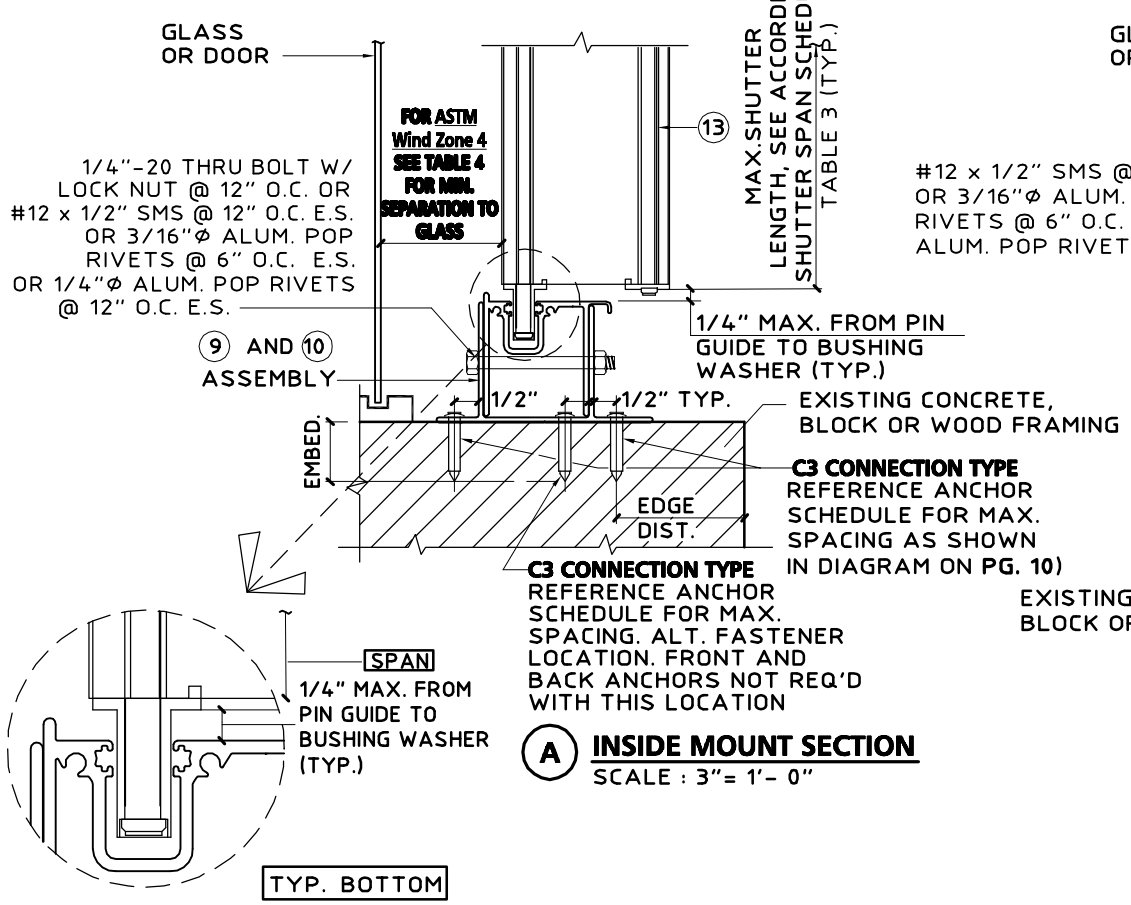

A **INSIDE MOUNT SECTION**
SCALE : 3"= 1'- 0"

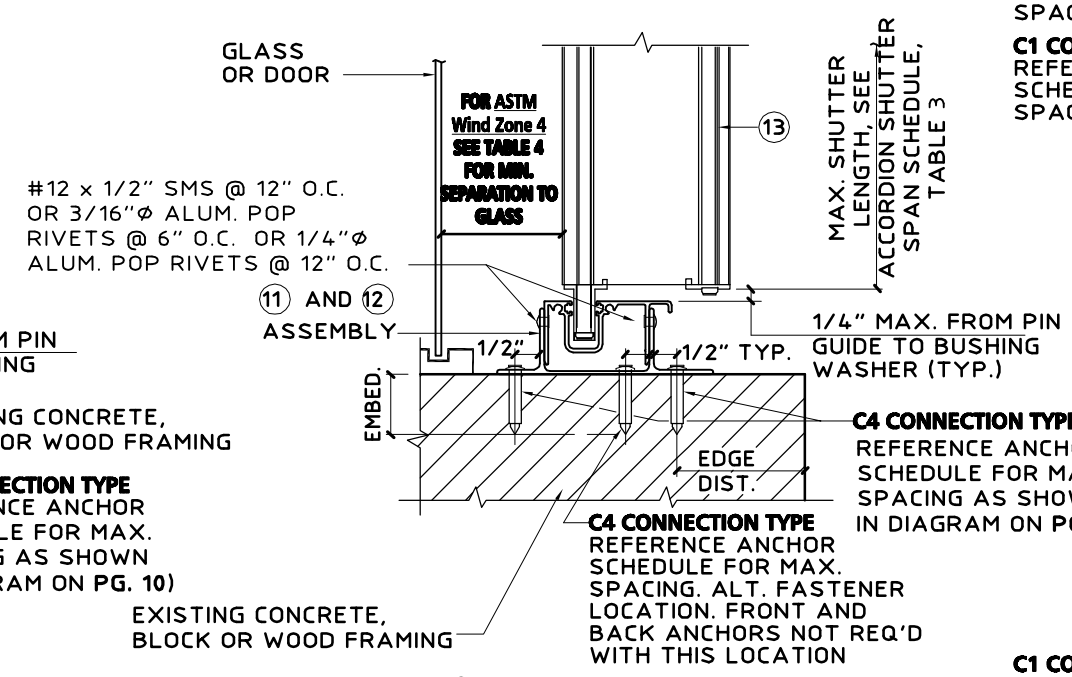

B **INSIDE MOUNT SECTION**
SCALE : 3"= 1'- 0"

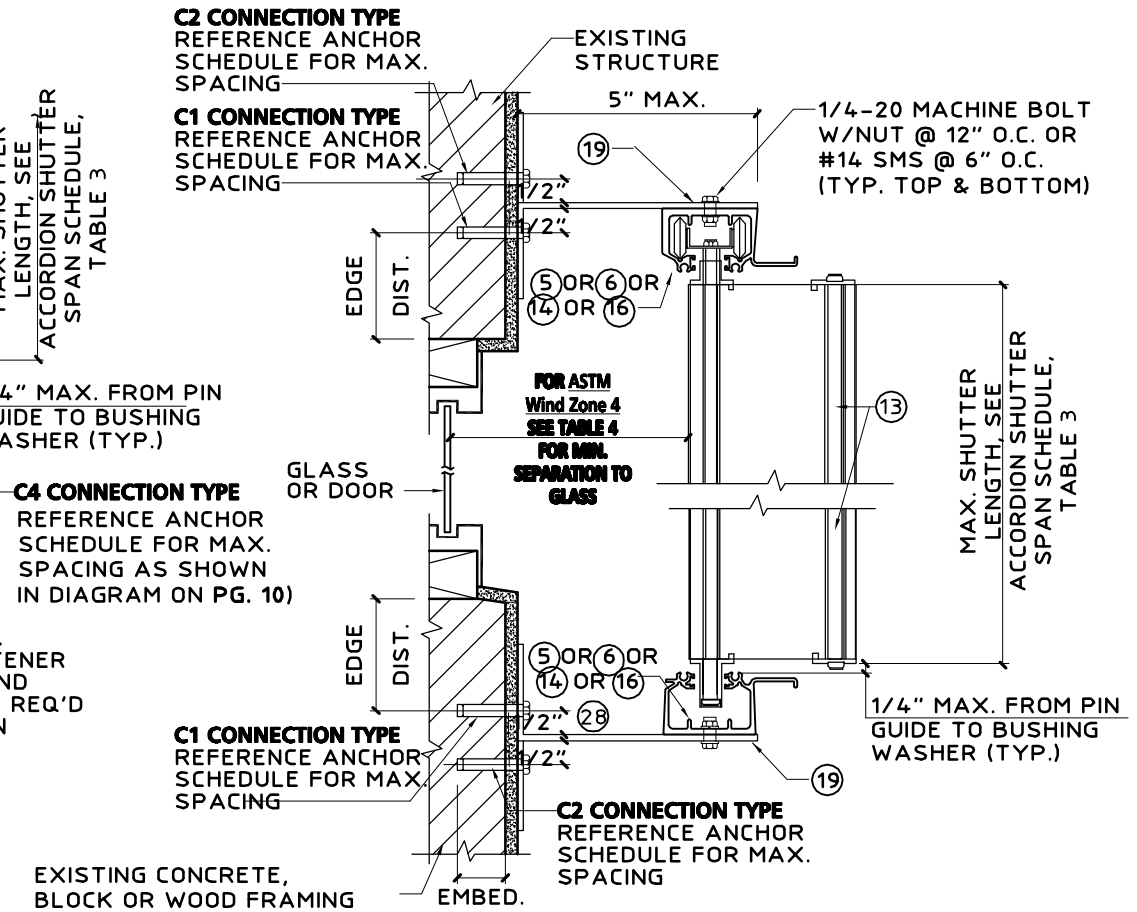

Ca **BUILD OUT MOUNT SECTION**
SCALE : 3"= 1'- 0"

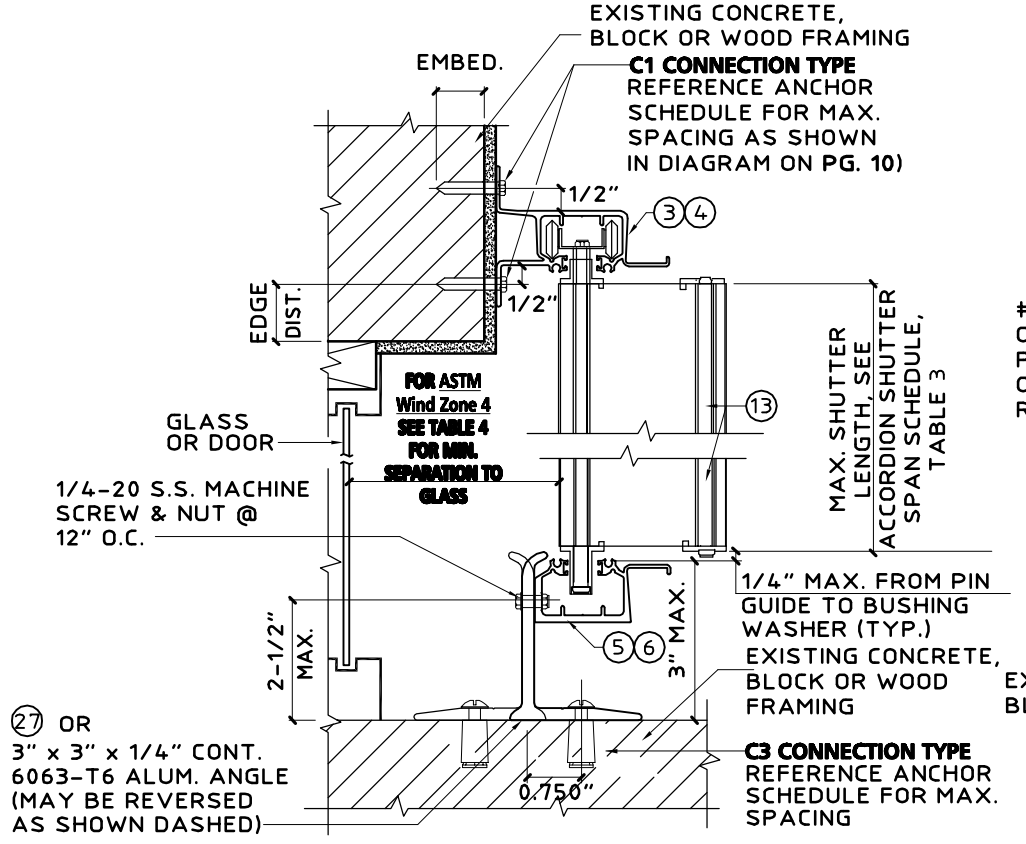

D **WALL MOUNT SECTION**
SCALE : 3"= 1'- 0"

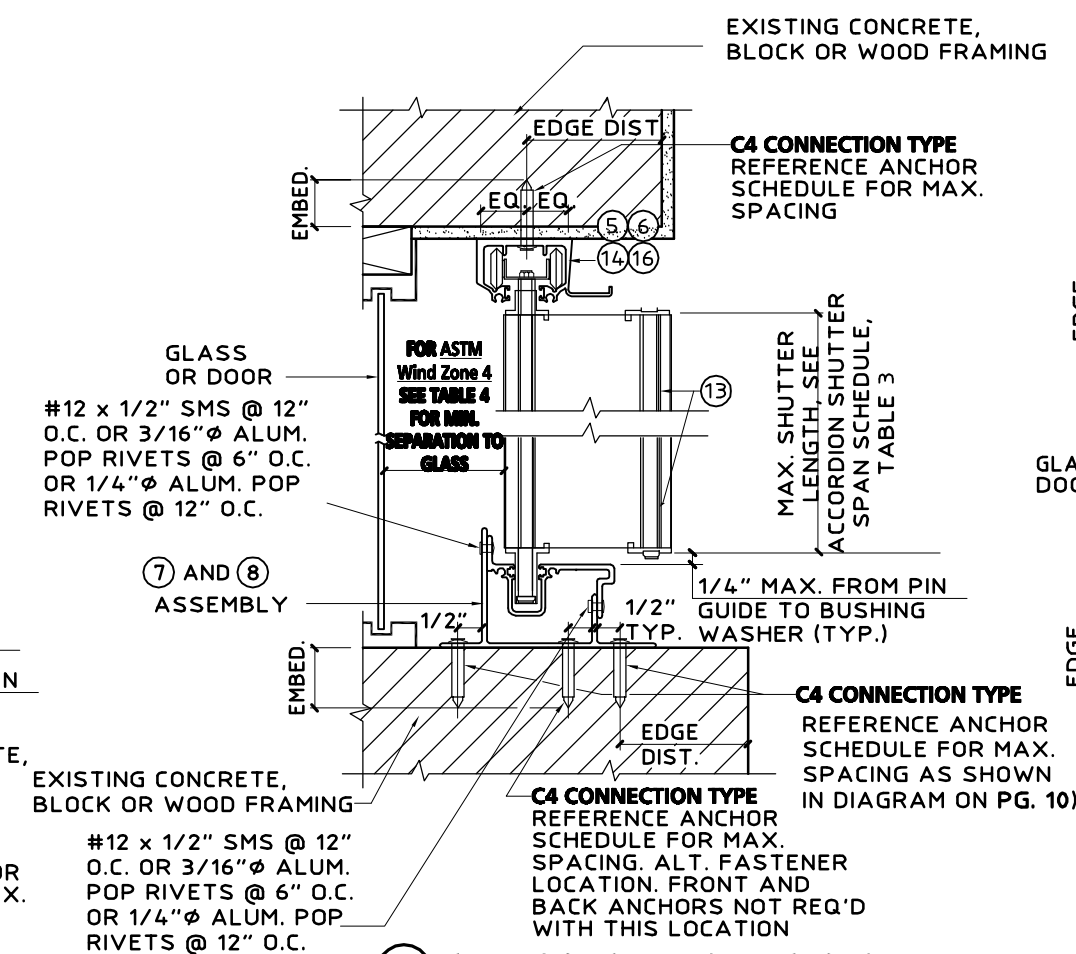

E **CEILING / INSIDE MOUNT SECTION**
SCALE : 3"= 1'- 0"

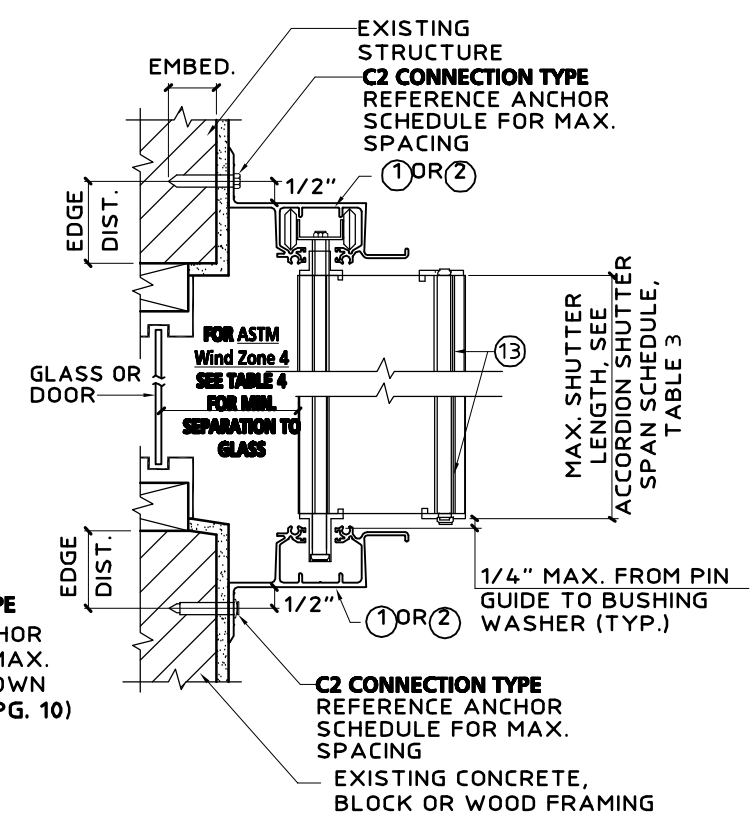

F **WALL/BUILD OUT SECTION**
SCALE : 3"= 1'- 0"

KNEZEVICH ASSOCIATES
Consulting Engineers
Texas Registered Engineering Firm No. F-11225
2590 S.W. 105th Terrace * Davie, Florida 33324
T (954) 821-6933 * F (954) 452-7960
email: VJK@Knezevich.com

Copyright © 2009 VJKnezevich & Associates, LLC d/b/a Knezevich Associates

6.8 ACCORDION SHUTTER

Town&Country INDUSTRIES
Wholesale Aluminum and Building Products
A DIVISION OF ABC SUPPLY CO., INC.
400 WEST MCNAB ROAD * FORT LAUDERDALE, FL. 33309
PHONE 954. 970.9999 * FAX 954-970-9988

revisions

no	date	by	description
1	5/28/2009	VJK	REVISE ENGINEER LICENSE INFORMATION
2	5/29/2009	VJK	GENERAL NOTES

V.J. Knezevich
Professional Engineer
Texas License No.: PE 102908
VLADIMIR J. KNEZEVICH
MAY 29 2009
LICENSED PROFESSIONAL ENGINEER
ARV 1 AS NOTED
date 05/27/2009
drawing no.
08-363
sheet 7 of 11

C:_MiDi_Projects\MiDisparate_CAD\VJKnezevich\CAD2008\Town_and_Country\08-363\R2-sub\08-363-07.dwg, 6/4/2009 3:49:45 PM, 11 x 17, 1:1, www.MiDisparate.com

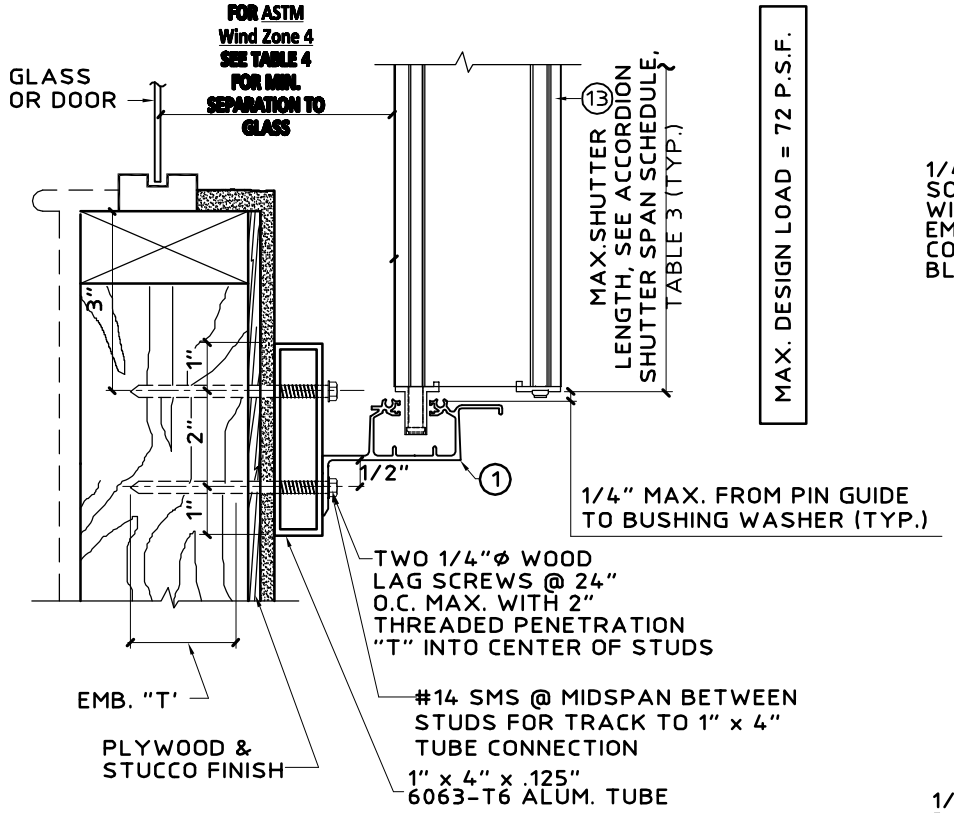

THIS DETAIL TO BE USED WHEN STUD SPACING EXCEEDS THE MAX. ALLOWABLE ANCHOR SPACING.

THIS DETAIL MAY ALSO BE USED AT TOP

G WALL MOUNT SECTION
SCALE : 3"= 1'- 0"

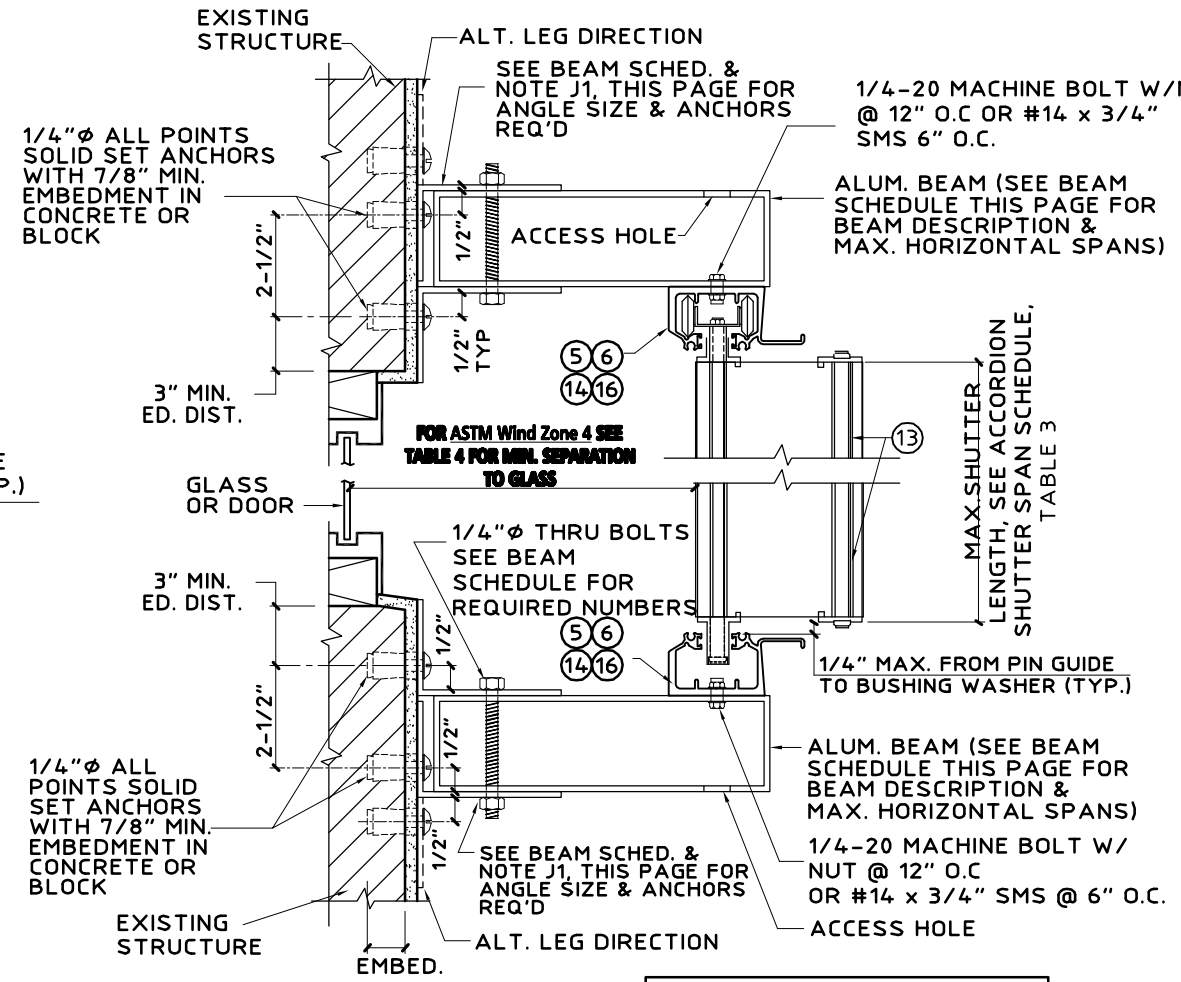

MAX. DESIGN LOAD = ± 72 PSF

J BEAM SPAN SECTION
SCALE : 3"= 1'- 0"

* BOX BEAM SCHEDULE									
BOX BEAM	SHUTTER SPAN	TOP BEAM	BOT. BEAM	# OF THRU BOLT		# OF 1/4" ALL POINT ANCHORS EA. ANGLE		LENGTH ANGLE REQ	
				TOP BEAM	BOT. BEAM	TOP BEAM	BOT. BEAM	TOP BEAM	BOT. BEAM
2" x 5" 0.125"	5'-0"	9'-0"	9'-6"	2	2	2	2	6"	6"
	8'-0"	8'-0"	8'-1"	2	2	3	3	9"	9"
	10'-3"	7'-7"	7'-5"	2	2	3	3	9"	9"
2" x 6" 0.125"	5'-0"	9'-5"	11'-1"	2	2	2	2	6"	6"
	8'-0"	8'-6"	9'-6"	2	2	3	3	9"	9"
	10'-3"	7'-10"	8'-6"	2	2	3	3	9"	9"
2" x 8" 0.125"	5'-0"	10'-1"	14'-3"	2	2	2	3	9"	9"
	8'-0"	9'-0"	11'-10"	2	2	3	4	9"	12"
	10'-3"	8'-5"	10'-6"	2	3	3	4	9"	12"
2" x 10" 0.1875"	5'-0"	11'-7"	19'-8"	2	3	2	4	9"	12"
	8'-0"	10'-3"	16'-8"	2	3	3	5	9"	15"
	10'-3"	9'-9"	14'-10"	3	4	4	5	12"	15"

* USE 2X3X1/4 OR 2X5X1/4 ANGLES FOR 2X5 & 2X6 BEAMS
USE 2X5X1/4 ANGLES FOR 2X8 & 2X10 BEAMS

BEAM SCHEDULE NOTES:

J1. USE BEAM SCHEDULE FOR DETAIL J .
J2. TOP & BOTTOM BEAMS MAY BE USED TOGETHER OR IN COMBINATION WITH OTHER CONNECTION DETAILS. WHERE USED TOGETHER, BEAM MUST BE LIMITED TO TOP BEAM SPANS.
J3 LAP BEAMS ARE NOT ALLOWED.
J4 ALL BEAMS & ANGLES TO BE 6063-T6 ALLOY.

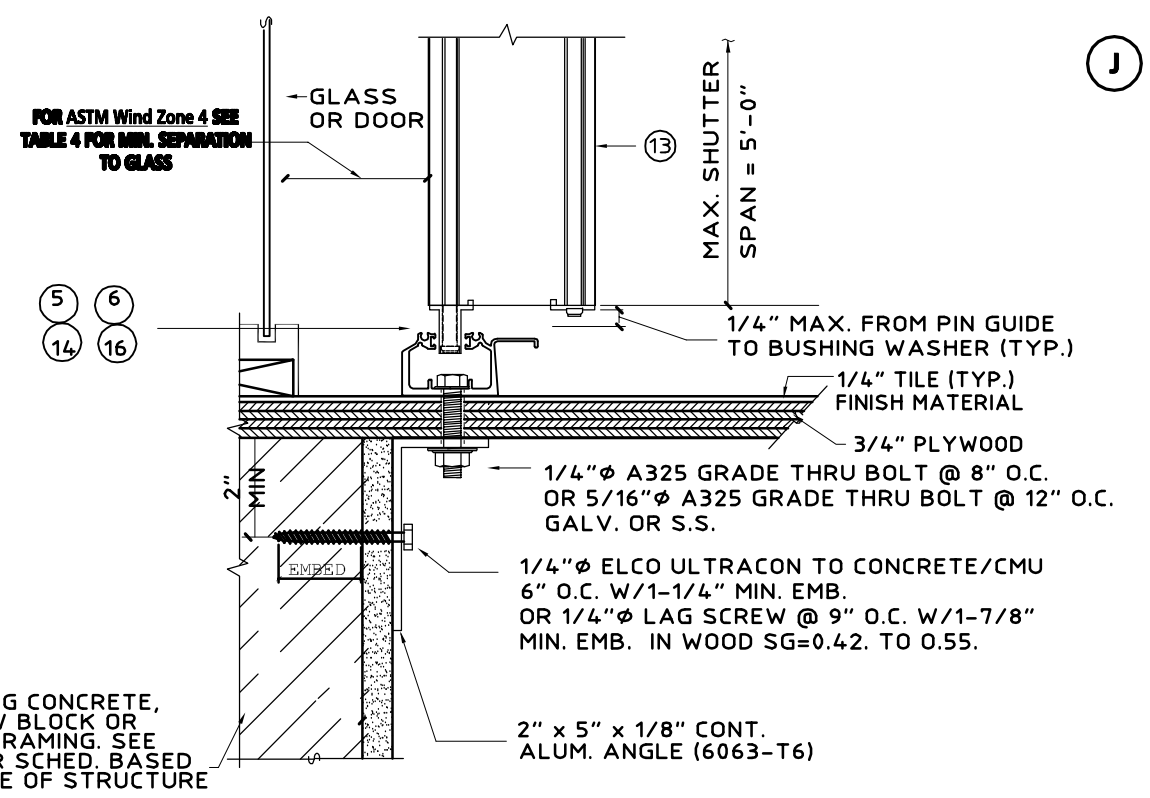

(MAX. DESIGN LOAD ± 72 P.S.F.)

H PASS THRU DETAIL
SCALE : 3"= 1'- 0"

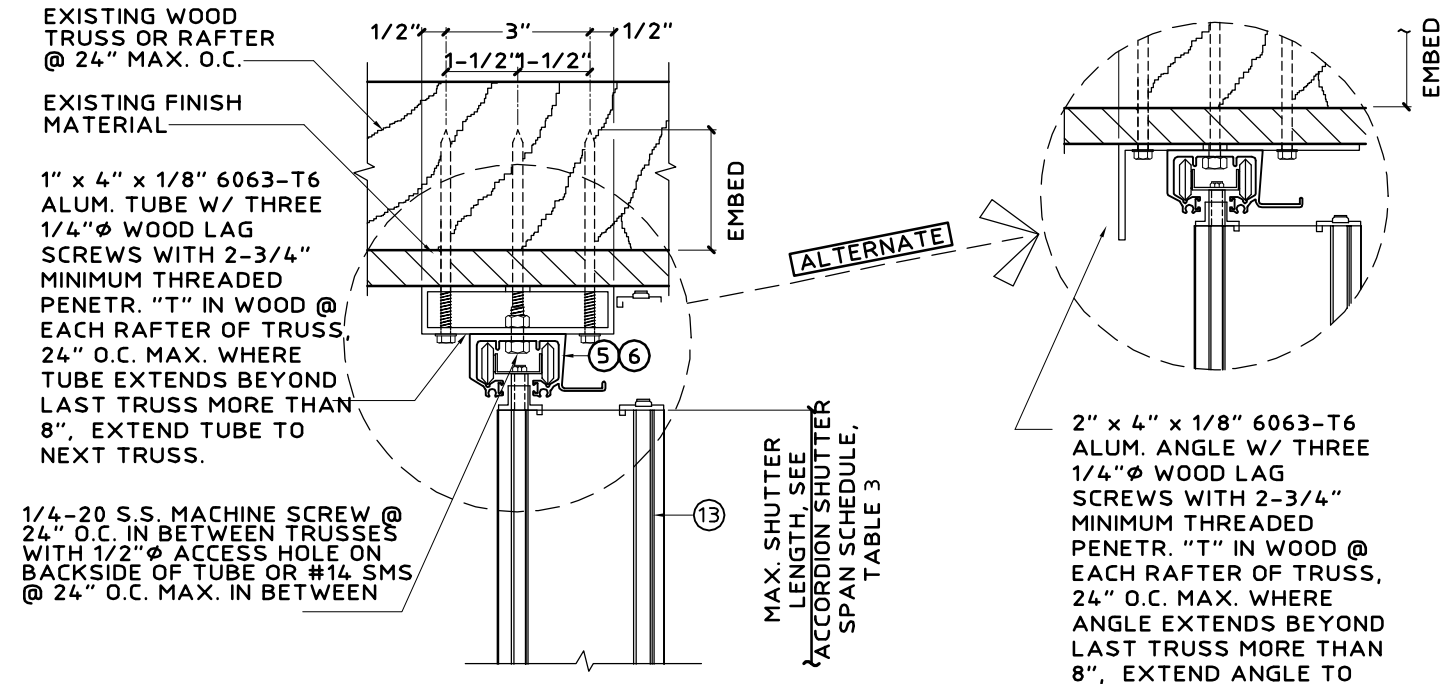

(MAX. DESIGN LOAD ± 72 P.S.F.)

K TRUSS MOUNT SECTION
SCALE : 3"= 1'- 0"

KNEZEVICH ASSOCIATES
Consulting Engineers
Texas Registered Engineering Firm No. F-11225
2590 S.W. 105th Terrace * Davie, Florida 33324
T (954) 821-6933 * F (954) 452-7960
email: VJK@Knezevich.com

Copyright © 2009 VJKnezevich & Associates, LLC d/b/a Knezevich Associates

6.8 ACCORDION SHUTTER

Town&Country INDUSTRIES
Wholesale Aluminum and Building Products
A DIVISION OF ABC SUPPLY CO., INC.
400 WEST MCNAB ROAD * FORT LAUDERDALE, FL. 33309
PHONE 954.970.9999 * FAX 954-970-9988

revisions

no	date	by	description
1	5/28/2009	VJK	REVISE ENGINEER LICENSE INFORMATION
2	5/29/2009	VJK	GENERAL NOTES

V.J. Knezevich
Professional Engineer
Texas License No.: PE 102908
MAY 29 2009

scale: AS NOTED
drawn: ARV
date: 5/27/2009
drawing no.
08-363
sheet 8 of 11

C:_MiDi_Projects\MiDisparate_CAD\VJKnezevich\CAD2008\Town_and_Country\08-363\R2-sub\08-363-08.dwg, 6/4/2009 3:50:22 PM, 11 x 17, 1:1, www.MiDisparate.com

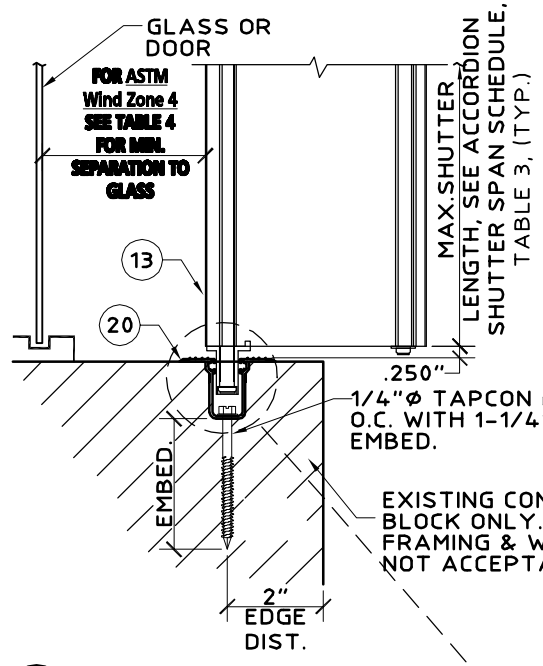

M RECESS SILL DETAIL
SCALE : 3"= 1'- 0"

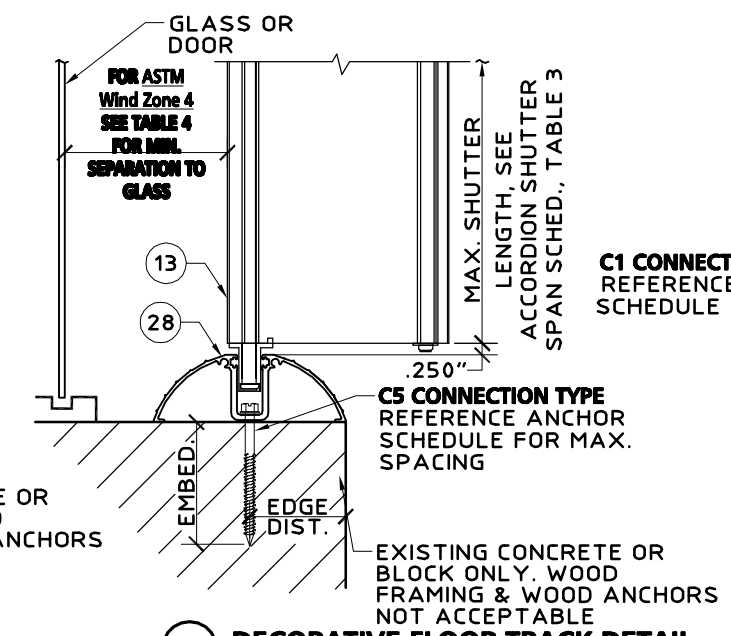

N DECORATIVE FLOOR TRACK DETAIL
SCALE : 3"= 1'- 0"

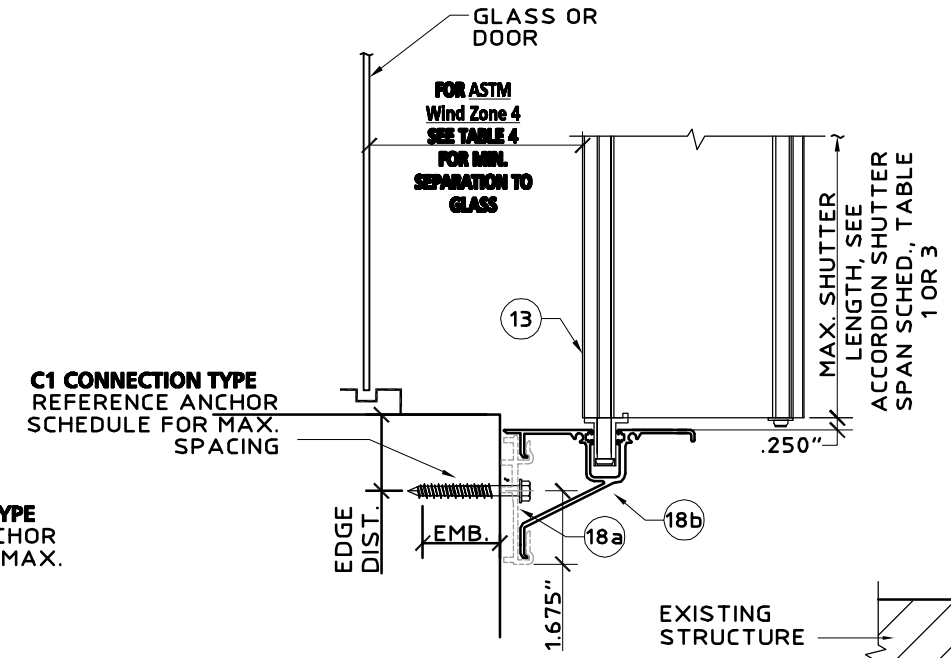

O WALL MOUNT SILL DETAIL
SCALE : 3"= 1'- 0"

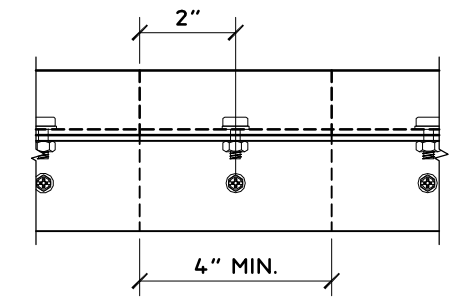

RADIUS HEADER MOUNTED PARTIAL ELEVATION
SCALE: 3" = 1'-0"

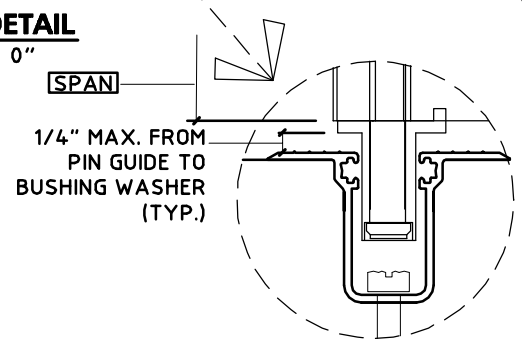

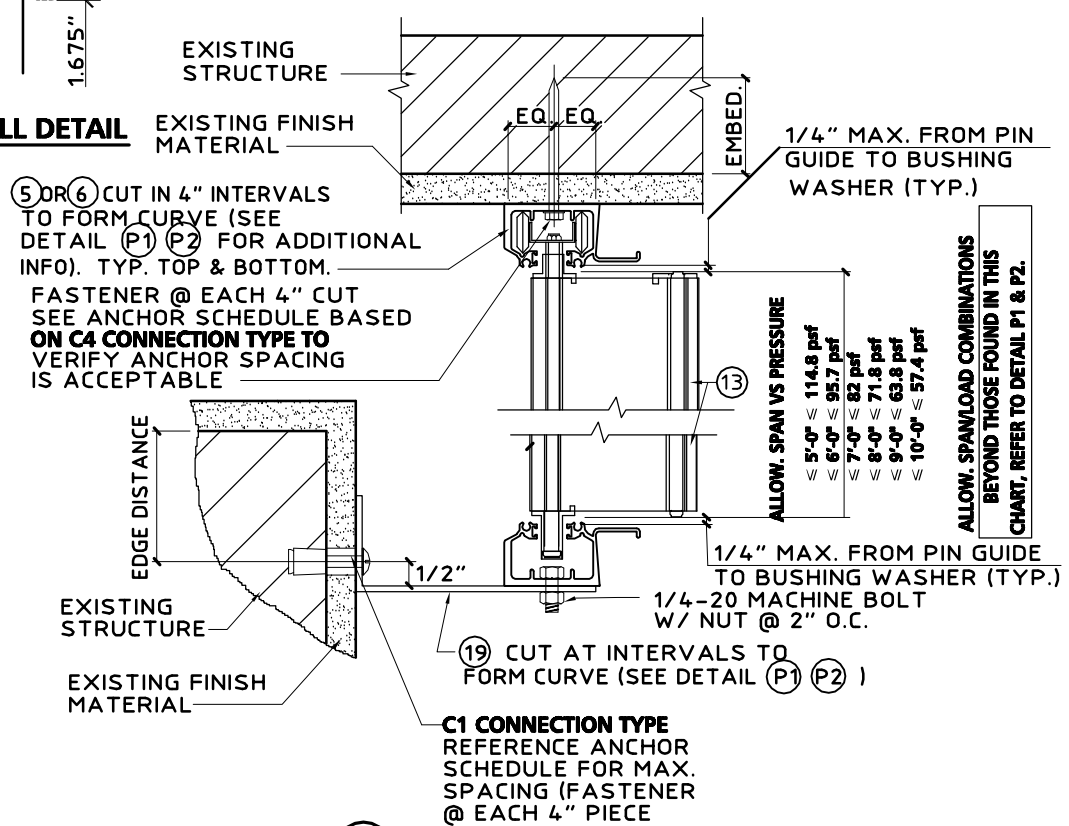

P CURVED TRACK SECTION DETAIL
SCALE : 3"= 1'- 0"

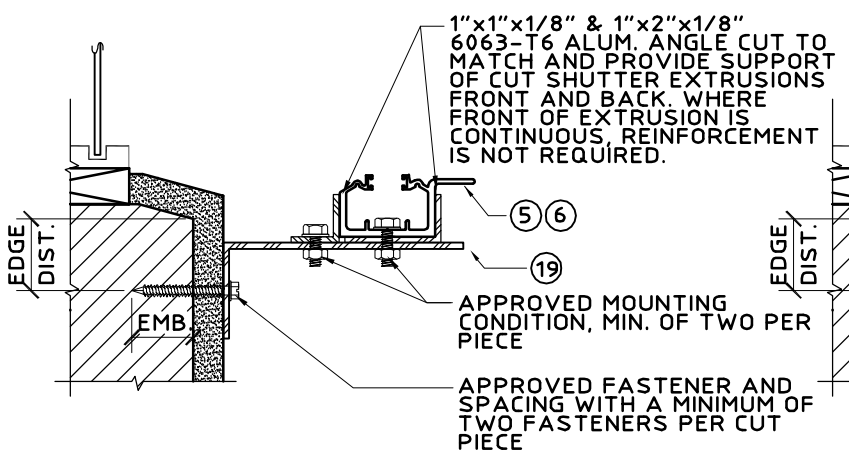

P1 TYP. SECTION FOR SHUTTERS
SCALE: 3" = 1'-0"

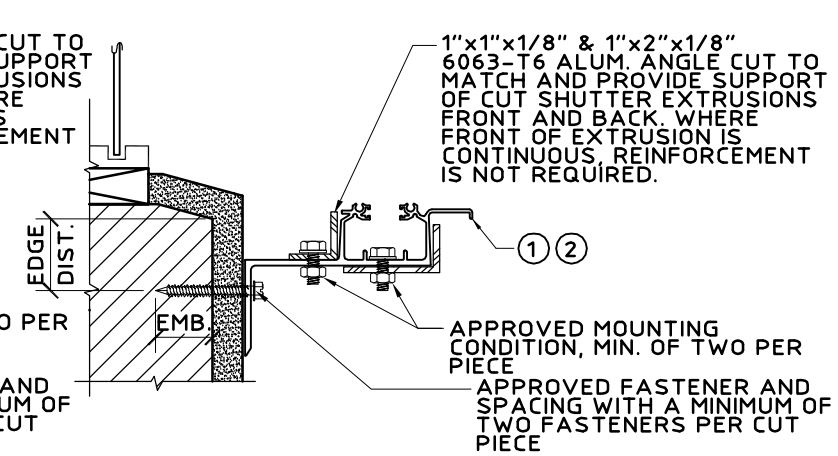

P2 TYP. ALTERNATE SECTION FOR SHUTTERS
SCALE: 3" = 1'-0"

KNEZEVICH ASSOCIATES
Consulting Engineers
Texas Registered Engineering Firm No. F-11225
2590 S.W. 105th Terrace * Davie, Florida 33324
T (954) 821-6933 * F (954) 452-7960
email: VJK@Knezevich.com

Copyright © 2009 VJKnezevich & Associates, LLC d/b/a Knezevich Associates

6.8 ACCORDION SHUTTER

Town & Country INDUSTRIES
Wholesale Aluminum and Building Products
A DIVISION OF ABC SUPPLY CO., INC.
400 WEST MCNAB ROAD * FORT LAUDERDALE, FL 33309
PHONE 954.970.9999 * FAX 954-970-9988

revisions

no	date	by	description
1	5/28/2009	VJK	REVISE ENGINEER LICENSE INFORMATION
2	5/29/2009	VJK	GENERAL NOTES

V.J. Knezevich
Professional Engineer
Texas License No.: FE 102908
STATE OF TEXAS
VLADIMIR J. KNEZEVICH
MAY 29 2009
PROFESSIONAL ENGINEER

SCALE: AS NOTED
DATE: 05/27/2009
drawing no.
08-363
sheet 9 of 11

C:_MiDi_Projects\MiDisparate_CAD\VJKnezevich\CAD2008\Town_and_Country\08-363\R2-sub\08-363-09.dwg, 6/4/2009 3:49:59 PM, 11 x 17, 1:1, www.MiDisparate.com

ANCHOR SCHEDULE FOR CONCRETE

MAXIMUM FASTENER SPACING (INCHES) REQUIRED FOR VARIOUS DESIGN LOADS AND SPANS

ANCHOR TYPE & MINIMUM CONCRETE REQUIREMENTS	LOAD (W) P.S.F. MAX. (SEE NOTE 1)	MIN. 1" EDGE DISTANCE															MIN. 2-1/2" EDGE DISTANCE														
		SPANS UP TO 6'-0" (SEE NOTE 1) CONNECTION TYPE (SEE NOTE 3)					SPANS UP TO 8'-8" (SEE NOTE 1) CONNECTION TYPE (SEE NOTE 3)					SPANS UP TO 13'-0" (SEE NOTE 1) CONNECTION TYPE (SEE NOTE 3)					SPANS UP TO 6'-0" (SEE NOTE 1) CONNECTION TYPE (SEE NOTE 3)					SPANS UP TO 8'-8" (SEE NOTE 1) CONNECTION TYPE (SEE NOTE 3)					SPANS UP TO 13'-0" (SEE NOTE 1) CONNECTION TYPE (SEE NOTE 3)				
		C1	C2	C3	C4	C5	C1	C2	C3	C4	C5	C1	C2	C3	C4	C5	C1	C2	C3	C4	C5	C1	C2	C3	C4	C5	C1	C2	C3	C4	C5
1/4"∅ ITW TAPCON WITH 1-3/4" MIN. EMBEDMENT	48.0	16	16	6	7	8	16	16	4	5	5	16	16	3	3	3	16	16	13	16	16	16	16	9	12	15	16	16	6	8	10
	62.0	16	16	5	5	6	16	16	3	4	4	15	9			3	16	16	10	14	16	16	16	7	9	12	16	10	4	6	8
	72.0	16	16	4	5	5	16	16	3	3	3	13	6				16	16	8	12	15	16	16	6	8	10	14	7	4	5	7
	110.0	16	16		3	3	12	6				11	4				16	16	5	7	10	14	6	4	5	6	12	4	3	4	5
	200.0	11	4				11	4				11	4				12	4	3	4	6	12	4	3	4	5	12	4	3	4	5
1/4"∅ ELCO ULTRACON WITH 1-3/4" MIN. EMBEDMENT	48.0	16	16	9	12	14	16	16	6	8	10	16	16	4	5	8	16	16	12	16	16	16	16	8	12	16	16	16	5	8	11
	62.0	16	16	7	9	11	16	16	5	6	7	13	8	3	4	5	16	16	9	13	16	16	16	6	9	12	14	8	4	6	8
	72.0	16	16	6	8	9	16	16	4	5	6	11	5		3	4	16	16	8	11	15	16	16	5	8	11	12	5	3	5	7
	110.0	16	16	4	5	6	11	5		3	4	9	3		3	3	16	16	5	7	10	11	5	3	5	7	10	4	3	4	6
	200.0	9	3		3	3	9	3		3	3	9	3		3	3	10	4	3	4	6	10	4	3	4	6	10	4	3	4	6
1/4"∅ ELCO CRETE FLEX SS4 WITH 2" MIN. EMBEDMENT	48.0																16	16	16	16	16	16	16	12	16	16	16	16	8	11	16
	62.0																16	16	13	16	16	16	16	9	13	16	16	11	6	9	12
	72.0																16	16	11	16	16	16	16	8	11	16	16	7	5	7	10
	110.0																16	16	7	11	15	15	7	5	7	10	13	5	4	6	8
	200.0																13	5	4	6	8	13	5	4	6	8	13	5	4	6	8
		MIN. 1-1/4" EDGE DISTANCE															MIN. 3" EDGE DISTANCE														
		C1	C2	C3	C4	C5	C1	C2	C3	C4	C5	C1	C2	C3	C4	C5	C1	C2	C3	C4	C5	C1	C2	C3	C4	C5	C1	C2	C3	C4	C5
* 1/4"∅ ALL POINTS SOLID-SET ANCHOR WITH 7/8" EMBEDMENT & 1/4-20 STAINLESS STEEL MACHINE SCREW	48.0	16	16	7	9	11	16	16	4	6	8	12	12	3	4	5	16	16	14	16	16	16	16	10	14	16	16	16	6	9	13
	62.0	16	16	5	7	9	14	14	3	5	6	9	5		3	4	16	16	11	16	16	16	16	8	11	15	16	9	5	7	10
	72.0	16	16	4	6	7	12	12	3	4	5	8	4			3	16	16	9	14	16	16	16	6	9	13	13	6	4	6	9
	110.0	11	11	3	4	5	8	3			3	7				3	16	16	6	9	12	13	6	4	6	8	11	4	3	5	7
	200.0	7				3	7				3	7				3	11	4	3	5	7	11	4	3	5	7	11	4	3	5	7
		MIN. 2-5/8" EDGE DISTANCE															MIN. 5-1/4" EDGE DISTANCE														
		C1	C2	C3	C4	C5	C1	C2	C3	C4	C5	C1	C2	C3	C4	C5	C1	C2	C3	C4	C5	C1	C2	C3	C4	C5	C1	C2	C3	C4	C5
3/8"∅ POWERS DROP-IN & 3/8-16 STAINLESS STEEL BOLT WITH 1-5/8" MIN. EMBEDMENT	48.0	16	16	16	16	16	16	16	12	16	16	16	16	8	11	15	16	16	16	16	16	16	16	16	16	16	16	16	11	16	16
	62.0	16	16	13	16	16	16	16	9	13	16	16	12	6	8	11	16	16	16	16	16	16	16	12	16	16	16	14	8	12	16
	72.0	16	16	11	16	16	16	16	8	11	15	16	8	5	7	10	16	16	16	16	16	16	16	11	16	16	16	9	7	11	15
	110.0	16	16	7	10	14	16	8	5	7	9	15	6	4	6	8	16	16	10	15	16	16	9	7	10	15	16	6	6	9	13
	200.0	15	6	4	6	8	15	6	4	6	8	15	6	4	6	8	16	6	6	9	13	16	6	6	9	13	16	6	6	9	13
		MIN. 2-3/16" EDGE DISTANCE															MIN. 3-1/8" EDGE DISTANCE														
		C1	C2	C3	C4	C5	C1	C2	C3	C4	C5	C1	C2	C3	C4	C5	C1	C2	C3	C4	C5	C1	C2	C3	C4	C5	C1	C2	C3	C4	C5
5/16"∅ ITW BUILDEX TAPCON XL WITH 1-3/4" MIN. EMBEDMENT	48.0	16	16	15	16	16	16	16	10	15	16	16	16	7	14	14	16	16	15	16	16	16	16	10	15	16	16	16	7	10	14
	62.0	16	16	11	16	16	16	16	8	12	16	16	9	5	8	11	16	16	12	16	16	16	16	8	12	16	16	10	5	8	11
	72.0	16	16	10	15	16	16	16	7	10	14	13	6	4	6	9	16	16	10	15	16	16	16	7	10	14	14	6	4	7	9
	110.0	16	16	6	9	13	13	6	4	6	9	11	4	3	5	8	16	16	6	10	13	14	6	4	6	9	12	4	4	5	8
	200.0	11	4	3	5	8	11	4	3	5	8	11	4	3	5	8	12	4	4	5	8	12	4	4	5	8	12	4	4	5	8
5/16"∅ ELCO ULTRACON WITH 1-3/4" MIN. EMBEDMENT	48.0	16	16	16	16	16	16	16	12	16	16	16	16	8	12	16	16	16	16	16	16	16	16	13	16	16	16	16	8	13	16
	62.0	16	16	13	16	16	16	16	9	14	16	16	10	6	9	13	16	16	15	16	16	16	16	10	15	16	16	11	6	10	14
	72.0	16	16	11	16	16	16	16	8	12	16	15	7	5	8	11	16	16	12	16	16	16	16	8	13	16	16	8	5	8	12
	110.0	16	16	7	11	16	15	7	5	8	11	12	5	4	6	9	16	16	8	12	16	16	7	5	8	12	14	5	5	7	10
	200.0	12	5	4	6	9	12	5	4	6	9	12	5	4	6	9	14	5	5	7	10	14	5	5	7	10	14	5	5	7	10

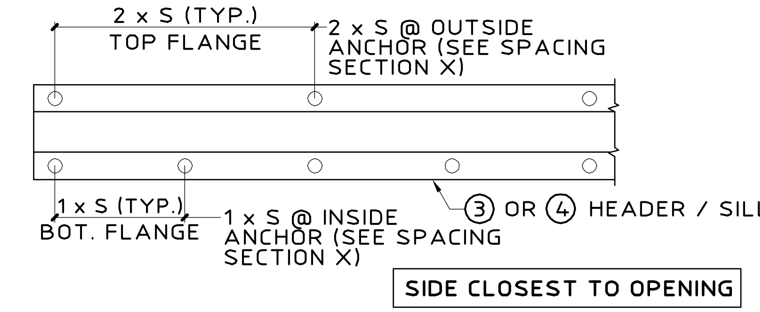

NOTE: "S" INDICATES ANCHOR SCHEDULE SPACING.

SPACING DIAGRAM FOR C1 CONNECTION TYPE:

- C1 CONNECTION TYPE USING PIECE 3 OR 4

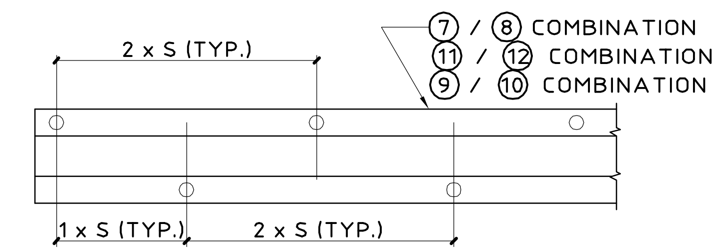

NOTE: "S" INDICATES ANCHOR SCHEDULE SPACING.

SPACING DIAGRAM FOR C3 & C4 CONNECTION TYPE:

- C3 CONNECTION TYPE USING PIECE ⑩ WITH OUTSIDE ANCHORS ONLY
- C4 CONNECTION TYPE USING PIECE ⑧ OR ⑫ WITH OUTSIDE ANCHORS ONLY

ANCHOR NOTES:

1. SPANS AND LOADS SHOWN HERE ARE FOR DETERMINING ANCHOR SPACING ONLY. ALLOWABLE STORM SHUTTER SPANS FOR SPECIFIC LOADS MUST BE LIMITED TO THOSE SHOWN IN TABLE 3 (Pg 1).
2. ENTER ANCHOR SCHEDULE BASED ON THE EXISTING STRUCTURE MATERIAL, ANCHOR TYPE AND EDGE DISTANCE. SELECT DESIGN LOAD GREATER THAN OR EQUAL TO NEGATIVE DESIGN LOAD ON SHUTTER AND SELECT SPAN GREATER THAN OR EQUAL TO SHUTTER SPAN.
3. SEE MOUNTING SECTION DETAILS FOR IDENTIFICATION OF CONNECTION TYPE.
4. EXISTING STRUCTURE MAY BE CONCRETE, ASTM C-90 HOLLOW CONCRETE BLOCK OR WOOD FRAMING. REFERENCE ANCHOR SCHEDULE FOR PROPER ANCHOR TYPE BASED ON TYPE OF EXISTING STRUCTURE AND APPROPRIATE CONNECTION TYPE. SEE CONNECTION DETAILS FOR IDENTIFICATION OF CONNECTION TYPE.
5. THE CONTRACTOR IS RESPONSIBLE TO ENSURE THE ANCHORS ARE INSTALLED IN ACCORDANCE WITH MANUFACTURERS' RECOMMENDATIONS. EMBEDMENT LENGTHS SHALL BE AS NOTED AND DO NOT INCLUDE STUCCO OR OTHER FINISHES.
6. WHERE EXISTING STRUCTURE IS WOOD FRAMING, WOOD FRAMING CONDITIONS VARY. FIELD VERIFY THAT FASTENERS ARE INTO ADEQUATE WOOD FRAMING MEMBERS, NOT PLYWOOD. FASTENING TO PLYWOOD IS ACCEPTABLE ONLY FOR SIDE CLOSURE PIECES.
7. WHERE LAG SCREWS FASTEN TO NARROW FACE OF STUD FRAMING, FASTENER SHALL BE LOCATED IN CENTER OF NOMINAL 2" x 4" (MIN.) WOOD STUD. 3/4" EDGE DISTANCE IS ACCEPTABLE FOR WOOD FRAMING. LAG SCREWS SHALL HAVE PHILLIPS PAN HEAD OR HEX HEAD.
8. MACHINE SCREWS SHALL HAVE MINIMUM OF 1/2" ENGAGEMENT OF THREADS IN BASE ANCHOR AND MAY HAVE EITHER A PAN HEAD, TRUSS HEAD, OR WAFER HEAD (SIDEWALK BOLT), U.O.N.

▨ DESIGNATES ANCHOR CONDITIONS WHICH ARE NOT ACCEPTABLE USES.

* DESIGNATES ANCHORS WHICH ARE REMOVABLE BY REMOVING MACHINE SCREW, NUT OR WASHER WINGNUT.

9. CONCRETE STRENGTHS (F'C) USED FOR TESTING OF ANCHORS IS AS FOLLOWS: 5/16" DIAM. ELCO ULTRACON-F'C=3.5 KSI; 1/4" DIAM. ELCO ULTRACON-F'C=2.7 KSI; 1/4" DIAM. ELCO CRETEFLEX-F'C=3.35 KSI; 1/4" DIAM. ITW TAPCON-F'C=3.192 KSI. OTHERWISE USE F'C <=3.0 KSI.

KNEZEVICH ASSOCIATES
Consulting Engineers
Texas Registered Engineering Firm No. F-11225
2590 S.W. 105th Terrace * Davie, Florida 33324
T (954) 821-6933 * F (954) 452-7960
email: VJK@Knezevich.com

Copyright © 2009 VJKnezevich & Associates, LLC d/b/a Knezevich Associates

6.8 ACCORDION SHUTTER

Town & Country INDUSTRIES
Wholesale Aluminum and Building Products
A DIVISION OF ABC SUPPLY CO., INC.
400 WEST MCNAB ROAD * FORT LAUDERDALE, FL 33309
PHONE 954.970.9999 * FAX 954-970-9988

revisions

no	date	by	description
1	04/28/2009	VJK	REVISE ENGINEER LICENSE INFORMATION
2	05/29/2009	VJK	GENERAL NOTES

V.J. Knezevich
Professional Engineer
Texas License No.: PE 102908

drawn by: ARV   scale: AS NOTED
date: 01/27/2009
drawing no. **08-363**

C:_MiDi_Projects\MiDisparate_CAD\VJKnezevich\CAD2008\Town_and_Country\08-363\R2-sub\08-363-10.dwg, 6/4/2009 3:50:39 PM, 11 x 17, 1:1, www.MiDisparate.com

ANCHOR SCHEDULE FOR CONCRETE BLOCK

MAXIMUM FASTENER SPACING (INCHES) REQUIRED FOR VARIOUS DESIGN LOADS AND SPANS

ANCHOR TYPE & MINIMUM BLOCK REQUIREMENTS	LOAD (W) P.S.F. MAX. (SEE NOTE 1)	MIN. 1" EDGE DISTANCE															MIN. 2-1/2" EDGE DISTANCE														
		SPANS UP TO 6'-0" (SEE NOTE 1) CONNECTION TYPE (SEE NOTE 3)					SPANS UP TO 8'-8" (SEE NOTE 1) CONNECTION TYPE (SEE NOTE 3)					SPANS UP TO 13'-0" (SEE NOTE 1) CONNECTION TYPE (SEE NOTE 3)					SPANS UP TO 6'-0" (SEE NOTE 1) CONNECTION TYPE (SEE NOTE 3)					SPANS UP TO 8'-8" (SEE NOTE 1) CONNECTION TYPE (SEE NOTE 3)					SPANS UP TO 13'-0" (SEE NOTE 1) CONNECTION TYPE (SEE NOTE 3)				
		C1	C2	C3	C4	C5	C1	C2	C3	C4	C5	C1	C2	C3	C4	C5	C1	C2	C3	C4	C5	C1	C2	C3	C4	C5	C1	C2	C3	C4	C5
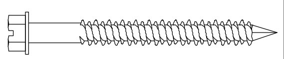 1/4"⌀ ITW TAPCON WITH 1-1/4" MIN. EMBEDMENT	48.0	7	7		3	4	5	5			3	3	3				12	12	4	7	10	8	8	3	5	7	5	5		3	5
	62.0	5	5			3	4	4									9	9	3	5	8	6	6		3	5	4				3
	72.0	5	5			3	3	3									8	8	3	4	7	5	5		3	5	3				3
	110.0	3	3														5	5		3	4	3				3	3				
	200.0																3					3					3				
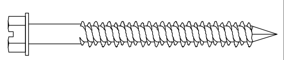 1/4"⌀ ELCO ULTRACON WITH 1-1/4" MIN. EMBEDMENT	48.0	14	14	4	6	9	10	10	3	4	6	6	6		3	4	14	14	5	9	13	10	10	3	6	9	6	6		4	6
	62.0	11	11	3	5	7	7	7		3	4	5	3			3	11	11	4	6	10	7	7	3	4	7	5	3		3	4
	72.0	9	9	3	4	6	6	6		3	4	4					9	9	3	6	9	6	6		4	6	4				4
	110.0	6	6			4	4					3					6	6		3	6	4				4	3				3
	200.0	3					3					3					3				3	3				3	3				3
		MIN. 1-1/4" EDGE DISTANCE															MIN. 2" EDGE DISTANCE														
		C1	C2	C3	C4	C5	C1	C2	C3	C4	C5	C1	C2	C3	C4	C5	C1	C2	C3	C4	C5	C1	C2	C3	C4	C5	C1	C2	C3	C4	C5
* 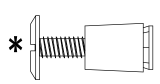 1/4"⌀ ALL POINTS SOLID-SET ANCHOR WITH 7/8" EMBEDMENT & 1/4-20 STAINLESS STEEL MACHINE SCREW	48.0	16	16	5	6	8	12	12	3	4	6	8	8		3	4	16	16	8	11	14	16	16	5	8	10	13	13	3	5	6
	62.0	13	13	3	5	6	9	9		3	4	6	3			3	16	16	6	8	11	15	15	4	6	7	10	6	3	4	5
	72.0	11	11	3	4	5	7	7		3	4	5					16	16	5	7	9	13	13	3	5	6	9	4		3	4
	110.0	7	7		3	3	5					4					13	13	3	5	6	9	4		3	4	7	3			3
	200.0	4					4					4					7	3			3	7	3			3	7	3			3
		MIN. 3" EDGE DISTANCE															MIN. 4" EDGE DISTANCE														
		C1	C2	C3	C4	C5	C1	C2	C3	C4	C5	C1	C2	C3	C4	C5	C1	C2	C3	C4	C5	C1	C2	C3	C4	C5	C1	C2	C3	C4	C5
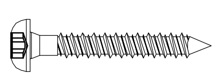 5/16"⌀ ITW BUILDEX TAPCON XL WITH 1-1/4" MIN. EMBEDMENT	48.0																16	16	8	13	16	15	15	5	9	14	10	10	3	6	9
	62.0																16	16	6	10	16	11	11	4	7	11	7	4	3	4	7
	72.0																14	14	5	9	13	10	10	3	6	9	6	3		4	6
	110.0																9	9	3	5	9	6	3		4	6	5			3	5
	200.0																5			3	5	5			3	5	5			3	5
		MIN. 1-9/16" EDGE DISTANCE															MIN. 3-1/8" EDGE DISTANCE														
		C1	C2	C3	C4	C5	C1	C2	C3	C4	C5	C1	C2	C3	C4	C5	C1	C2	C3	C4	C5	C1	C2	C3	C4	C5	C1	C2	C3	C4	C5
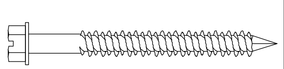 5/16"⌀ ELCO ULTRACON WITH 1-1/4" MIN. EMBEDMENT	48.0	16	16	6	8	10	14	14	4	5	7	9	9		3	4	16	16	8	12	16	16	16	5	8	12	11	11	3	5	8
	62.0	16	16	4	6	8	11	11	3	4	5	7	4			3	16	16	6	9	13	12	12	4	6	9	8	5		4	6
	72.0	14	14	4	5	6	9	9		3	4	6	3			3	15	15	5	8	11	10	10	3	5	8	7	3		3	5
	110.0	9	9		3	4	6				3	5					10	10	3	5	7	7	3		3	5	6			3	4
	200.0	5					5					5					6			3	4	6			3	4	6			3	4

ANCHOR NOTES:
SEE PAGE 10 of 11

ANCHOR SCHEDULE FOR WOOD SG = 0.55 MIN.

MAXIMUM FASTENER SPACING (INCHES) REQUIRED FOR VARIOUS DESIGN LOADS AND SPANS

ANCHOR TYPE & MINIMUM REQUIREMENTS	LOAD (W) P.S.F. MAX. (SEE NOTE 1)	MIN. 3/4" EDGE DISTANCE														
		SPANS UP TO 6'-0" (SEE NOTE 1) CONNECTION TYPE (SEE NOTE 3)					SPANS UP TO 8'-8" (SEE NOTE 1) CONNECTION TYPE (SEE NOTE 3)					SPANS UP TO 13'-0" (SEE NOTE 1) CONNECTION TYPE (SEE NOTE 3)				
		C1	C2	C3	C4	C5	C1	C2	C3	C4	C5	C1	C2	C3	C4	C5
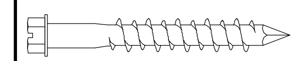 1/4"⌀ WOOD LAG WITH 1-3/4" MIN. THREAD PENETRATION PARALLEL OR PERP. TO WOOD GRAIN S.S. OR GALV. FINISHED	48.0	16	16	12	14	16	16	16	8	10	11	16	16	5	6	7
	62.0	16	16	9	11	12	16	16	6	7	8	16	13	4	5	5
	72.0	16	16	8	9	11	16	16	5	6	7	16	9	3	4	5
	110.0	16	16	5	6	7	16	9	3	4	5	16	6	3	3	4
	200.0	16	6	3	3	4	16	6	3	3	4	16	6	3	3	4
* 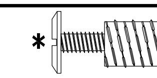 7/16"⌀ WOOD BUSHING WITH 7/8" MIN. EMBED. & 1/4-20 STAINLESS STEEL MACHINE SCREW	48.0	16	16				11	11				7	7			
	62.0	13	13				9	9				6	3			
	72.0	11	11				7	7				5				
	110.0	7	7				5					4				
	200.0	4					4					4				
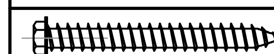 1/4"⌀ (#14) SMS OR 1/4"⌀ WOOD SCREW WITH 1-3/4" MIN. THREAD PENETRATION PARALLEL OR PERP. WOOD GRAIN S.S. OR GALV. FINISHED	48.0	16	16	11	15	16	16	16	8	10	12	16	16	5	7	8
	62.0	16	16	9	11	14	16	16	6	8	9	16	11	4	5	6
	72.0	16	16	7	10	12	16	16	5	7	8	15	7	3	4	5
	110.0	16	16	5	6	7	15	7	3	4	5	13	5	3	3	4
	200.0	13	5	3	3	4	13	5	3	3	4	13	5	3	3	4

ANCHOR SCHEDULE FOR WOOD SG = 0.42 MIN.

MAXIMUM FASTENER SPACING (INCHES) REQUIRED FOR VARIOUS DESIGN LOADS AND SPANS

ANCHOR TYPE & MINIMUM REQUIREMENTS	LOAD (W) P.S.F. MAX. (SEE NOTE 1)	MIN. 3/4" EDGE DISTANCE														
		SPANS UP TO 6'-0" (SEE NOTE 1) CONNECTION TYPE (SEE NOTE 3)					SPANS UP TO 8'-8" (SEE NOTE 1) CONNECTION TYPE (SEE NOTE 3)					SPANS UP TO 13'-0" (SEE NOTE 1) CONNECTION TYPE (SEE NOTE 3)				
		C1	C2	C3	C4	C5	C1	C2	C3	C4	C5	C1	C2	C3	C4	C5
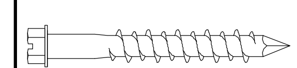 1/4"⌀ WOOD LAG WITH 1-3/4" MIN. THREAD PENETRATION PARALLEL OR PERP. TO WOOD GRAIN S.S. OR GALV. FINISHED	48.0	16	16	9	11	13	16	16	6	8	9	16	16	4	5	6
	62.0	16	16	7	9	10	16	16	5	6	7	15	9	3	4	4
	72.0	16	16	6	7	9	16	16	4	5	6	13	6		3	4
	110.0	16	16	4	5	6	12	6		3	4	10	4		3	3
	200.0	10	4		3	3	10	4		3	3	10	4		3	3
1/4"⌀ (#14) SMS OR 1/4"⌀ WOOD SCREW WITH 1-3/4" MIN. THREAD PENETRATION PARALLEL OR PERP. TO WOOD GRAIN S.S. OR GALV. FINISHED	48.0	16	16	8	10	13	16	16	5	7	9	13	13	3	4	6
	62.0	16	16	6	8	10	15	15	4	5	7	10	6		3	4
	72.0	16	16	5	7	9	13	13	3	4	6	9	4		3	4
	110.0	12	12	3	4	5	8	4		3	4	7	3			3
	200.0	7	3			3	7	3			3	7	3			3

KNEZEVICH ASSOCIATES
Consulting Engineers
Texas Registered Engineering Firm No. F-11225
2590 S.W. 105th Terrace * Davie, Florida 33324
T (954) 821-6933 * F (954) 452-7960
email: VJK@Knezevich.com

Copyright © 2009 VJKnezevich & Associates, LLC d/b/a Knezevich Associates

6.8 ACCORDION SHUTTER

Town & Country INDUSTRIES
Wholesale Aluminum and Building Products
A DIVISION OF ABC SUPPLY CO., INC.
400 WEST MCNAB ROAD * FORT LAUDERDALE, FL 33309
PHONE 954.970.9999 * FAX 954-970-9988

revisions

no	date	by	description
1	04/28/2009	VJK	REVISE ENGINEER LICENSE INFORMATION
2	05/29/2009	VJK	GENERAL NOTES

V.J. Knezevich
Professional Engineer
Texas License No.: PE 102908

VLADIMIR KNEZEVICH
MAY 29 2009

drawn by: ARV
scale: AS NOTED
date: 01/27/2009
drawing no. **08-363**
sheet 11 of 11

C:_MiDi_Projects\MiDisparate_CAD\VJKnezevich\CAD2008\Town_and_Country\08-363\R2-sub\08-363-11.dwg, 6/4/2009 3:50:53 PM, 11 x 17, 1:1, www.MiDisparate.com