GENERAL NOTES:

1. THE COLONIAL SHUTTER SHOWN ON THESE PRODUCT EVALUATION DOCUMENTS HAS BEEN VERIFIED FOR COMPLIANCE WITH THE 2006 INTERNATIONAL BUILDING CODE (IBC) AND THE INTERNATIONAL RESIDENTIAL CODE (IRC) WITH TEXAS REVISIONS EFFECTIVE JANUARY 1, 2008. THE COLONIAL SHUTTER IS ACCEPTABLE FOR THE SEAWARD AND INLAND AREAS, AS DEFINED BY THE TEXAS DEPARTMENT OF INSURANCE. THE FOLLOWING CONDITIONS WILL APPLY.
2. NO INCREASE IN ALLOWABLE STRESS HAS BEEN USED IN THE DESIGN OF THIS PRODUCT. WIND LOAD DURATION FACTOR Cd = 1.6 WAS USED FOR LAG SCREW DESIGN.
3. THIS SHUTTER SYSTEM HAS BEEN TESTED FOR LARGE MISSILE IMPACT RESISTANCE, CYCLIC PRESSURE LOADING AND FOR UNIFORM STATIC AIR PRESSURE IN CONFORMANCE WITH ASTM E 330, E 1886 & E 1996 MISSILE, LEVEL "D" STANDARD AND UNIFORM PRESSURE.
4. DETERMINE THE POSITIVE AND NEGATIVE DESIGN LOADS TO USE WHEN REFERENCING THESE DOCUMENTS IN ACCORDANCE WITH THE GOVERNING CODE, ASCE VERSION AND GOVERNING WIND VELOCITY. FOR WIND LOAD CALCULATIONS A DIRECTIONALITY FACTOR OF Kd =0.85 SHALL BE USED.
5. THESE PRODUCT EVALUATION DOCUMENTS ARE GENERIC AND DO NOT INCLUDE INFORMATION FOR SITE-SPECIFIC APPLICATION OF THIS SHUTTER SYSTEM.
6. THESE PRODUCT EVALUATION DOCUMENTS ARE SUITABLE TO BE APPLIED BY THE CONTRACTOR PROVIDED THE CONTRACTOR DOES NOT DEVIATE FROM THE CONDITIONS DETAILED HEREIN AND THE CONTRACTOR VERIFIES THE EXISTING STRUCTURE IS CAPABLE OF SUPPORTING THE SUPERIMPOSED LOADS.
7. ANY MODIFICATIONS OR ADDITIONS TO THESE PRODUCT EVALUATION DOCUMENTS WILL VOID THE PRODUCT EVALUATION DOCUMENTS.
8. WHEN THE SITE CONDITIONS DEVIATE FROM THESE PRODUCT EVALUATION DOCUMENTS, THE BUILDING OFFICIAL MAY REQUIRE THAT SITE SPECIFIC DOCUMENTS BE PREPARED, SIGNED, DATED AND SEALED BY A LICENSED ENGINEER OR REGISTERED ARCHITECT, WHICH DETAIL AND JUSTIFY THE DEVIATION. SAID DOCUMENTS SHALL BE SUBMITTED TO THE PRODUCT ENGINEER FOR REVIEW AS A CONDITION TO THE BUILDING OFFICIAL GRANTING HIS/HER APPROVAL.
9. EACH SHUTTER SHALL HAVE A LABEL THAT READS AS FOLLOWS:

   TOWN & COUNTRY INDUSTRIES, FT LAUDERDALE, FL
   COLONIAL SHUTTER
   MISSILE LEVEL D, ASTM E1886, E1996 & E330
   T.D.I. EVALUATED

10. ALL EXTRUSIONS SHALL BE 6063-T6 ALUMINUM ALLOY, U.O.N. MIN. Fy 25 KSI.
11. ALL BOLTS AND WASHERS SHALL BE GALVANIZED OR STAINLESS STEEL WITH A MINIMUM TENSILE STRENGTH OF 60 K.S.I., U.O.N. POP RIVETS SHALL BE 3/16" DIA. 410 STAINLESS STEEL, U.O.N.
12. MAXIMUM ALLOWABLE DESIGN PRESSURE IN CLOSED POSITION PROVIDING WIND LOAD & IMPACT RESISTANCE = +57.2/-66.2 P.S.F. FOR 97-3/4" MAX. SPANS.
13. SHUTTER ASSEMBLY MUST BE CLOSED AND SECURED AND SHALL NOT BE LEFT IN THE OPEN POSITION IN THE EVENT OF A HURRICANE WARNING.
14. THIS SHUTTER SYSTEM COMPLIES WITH THE ASTM E 1996 NON-POROUS REQUIREMENTS.
15. DESIGN PRESSURES IN THE OPEN POSITION ARE BASED ON ASCE 7, AND SHALL NOT EXCEED ±28 P.S.F. WITHOUT SITE SPECIFIC ENGINEERING.

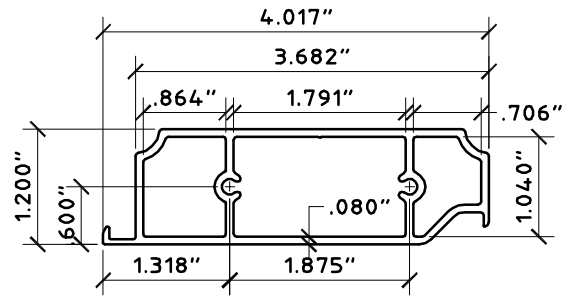

1 MUNTIN
SCALE: HALF SIZE

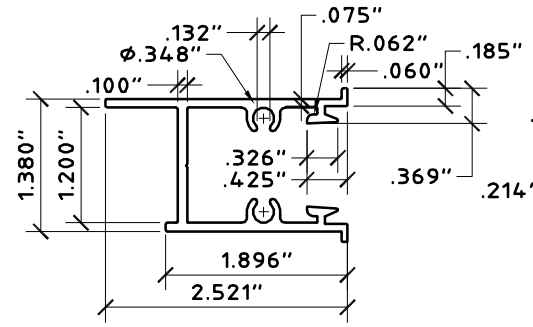

2 JAMB
SCALE: HALF SIZE

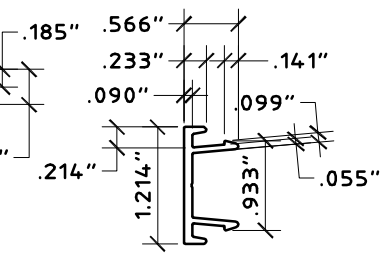

3 JAMB SNAP
SCALE: HALF SIZE

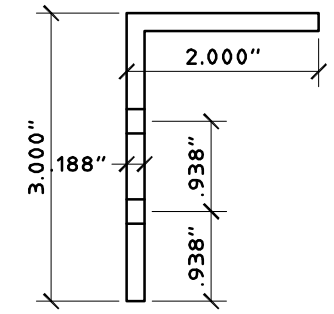

4 4" CENTER CLIP
SCALE: HALF SIZE

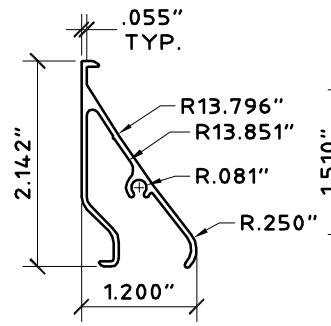

5 COLONIAL BLADE
SCALE: HALF SIZE

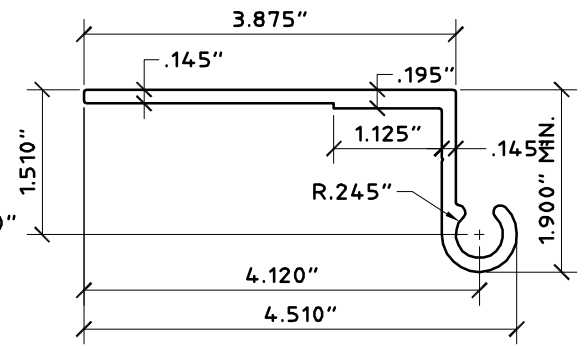

6 WALL HINGE
SCALE: HALF SIZE

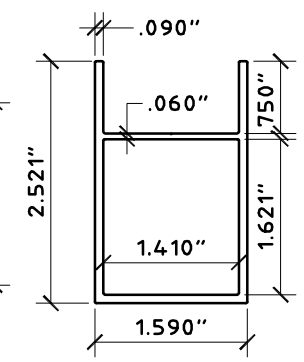

7 HEADER / SILL
SCALE: HALF SIZE

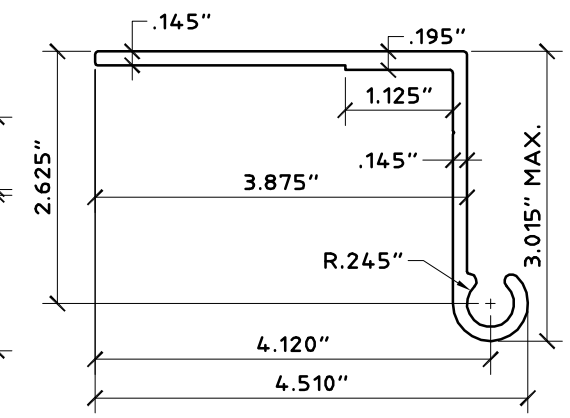

8 BUILD-OUT WALL HINGE
SCALE: HALF SIZE

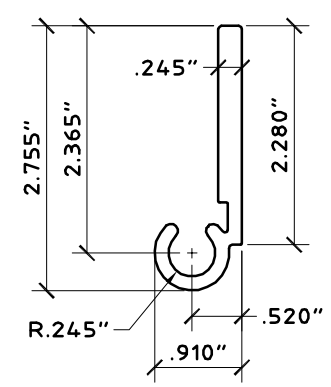

9 FLAT HINGE
SCALE: HALF SIZE

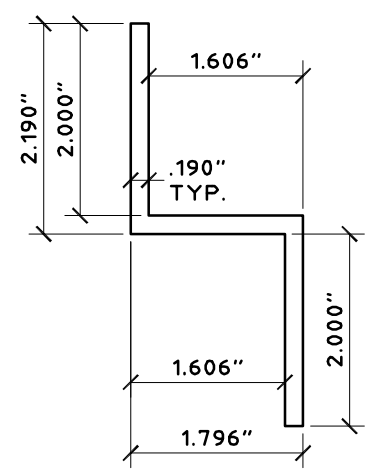

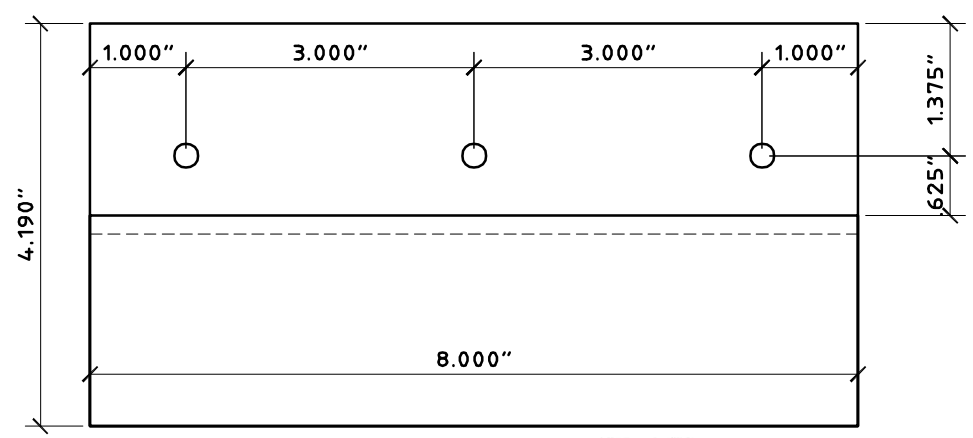

10 "Z" BAR - PROFILE & LAYOUT
SCALE: HALF SIZE

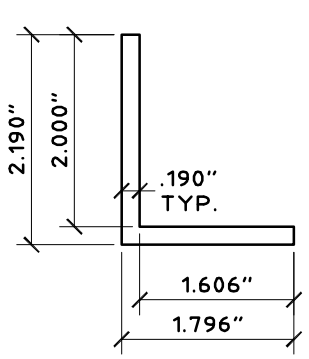

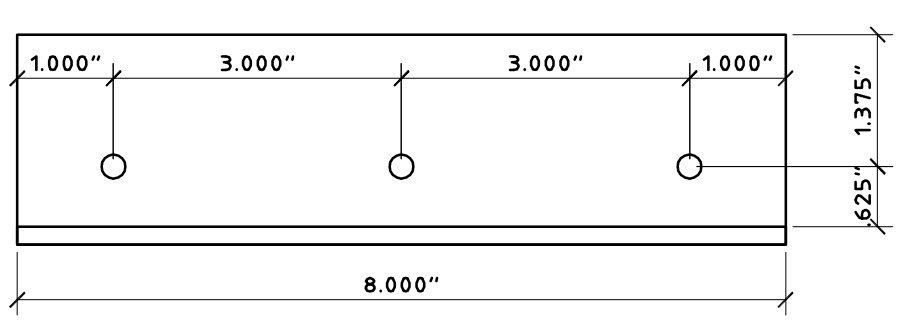

11 ANGLE
SCALE: HALF SIZE

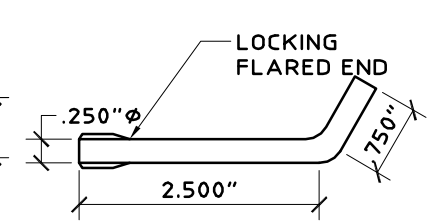

12 L-PIN - 1/4" ø
SCALE : HALF SIZE

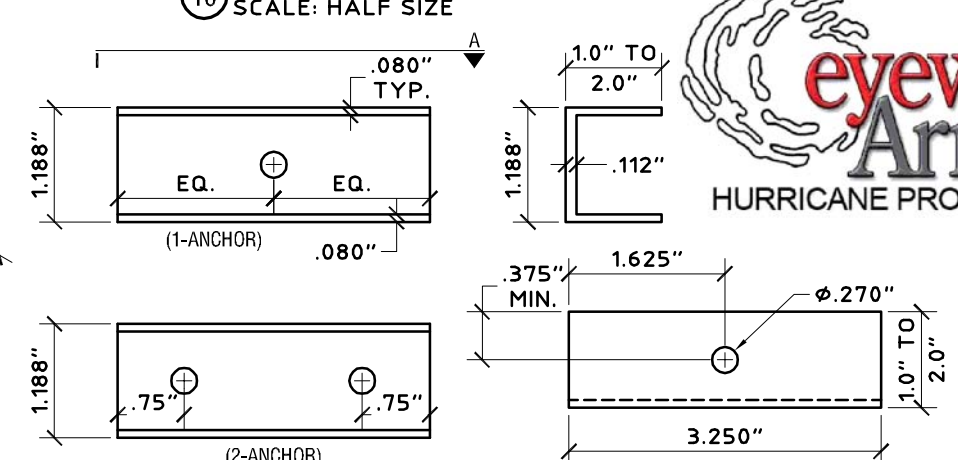

13 "C" CLIPS
SCALE : HALF SIZE

eyewall Armor™
HURRICANE PROTECTION

KNEZEVICH ASSOCIATES
Consulting Engineers
Texas Registered Engineering Firm No. 11225
2590 S.W. 105th Terrace * Davie, Florida 33324
T (954) 821-6933 * F (954) 452-7960
email: VJK@Knezevich.com

Copyright © 2009 VJKnezevich & Associates, LLC d/b/a Knezevich Associates

HINGED COLONIAL SHUTTER SYSTEM

Town&Country INDUSTRIES
Wholesale Aluminum and Building Products
A DIVISION OF ABC SUPPLY CO., INC.
400 WEST MCNAB ROAD * FORT LAUDERDALE, FL 33309
PHONE 954.970.9999 * FAX 954-970-9988

revisions

no	date	by	description
1	4/28/2009	VJK	REVISE - ENGINEER LICENSE INFORMATION
2	5/29/2009	VJK	GENERAL NOTES

V.J. Knezevich
Professional Engineer
Texas License No.: PE 102908
MAY 29 2009

scale: AS NOTED
date: 5/27/2009
drawing no.
08-361
sheet 1 of 5

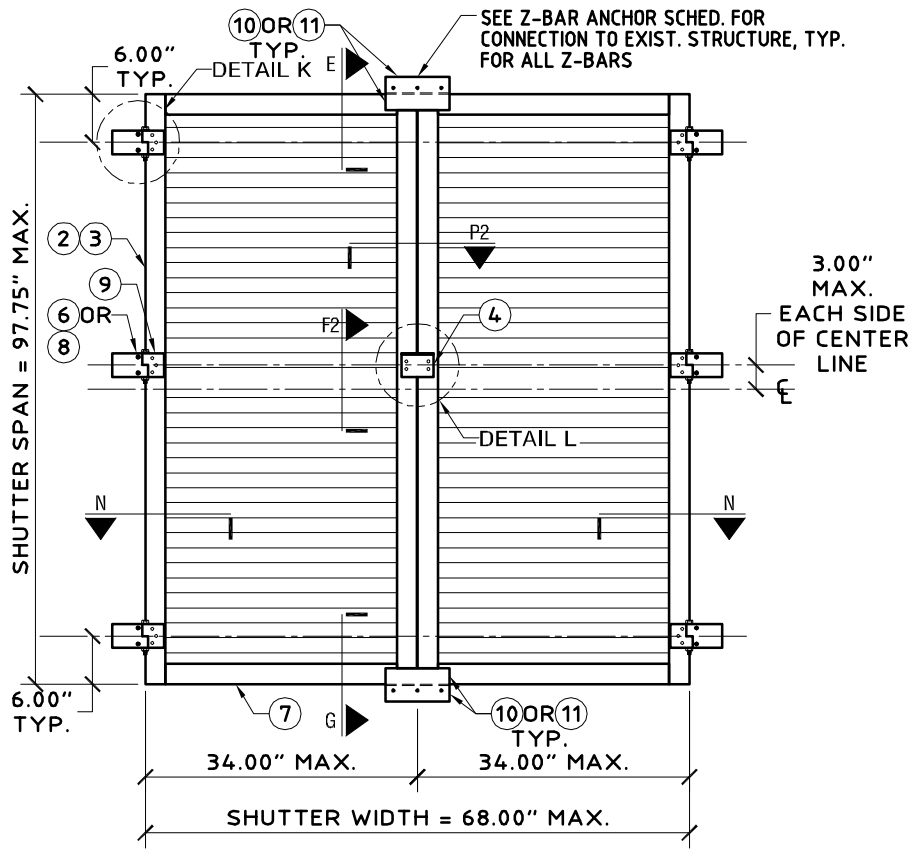

A TYPICAL ELEVATION 2 PANELS
SCALE: 1/2" = 1'-0"

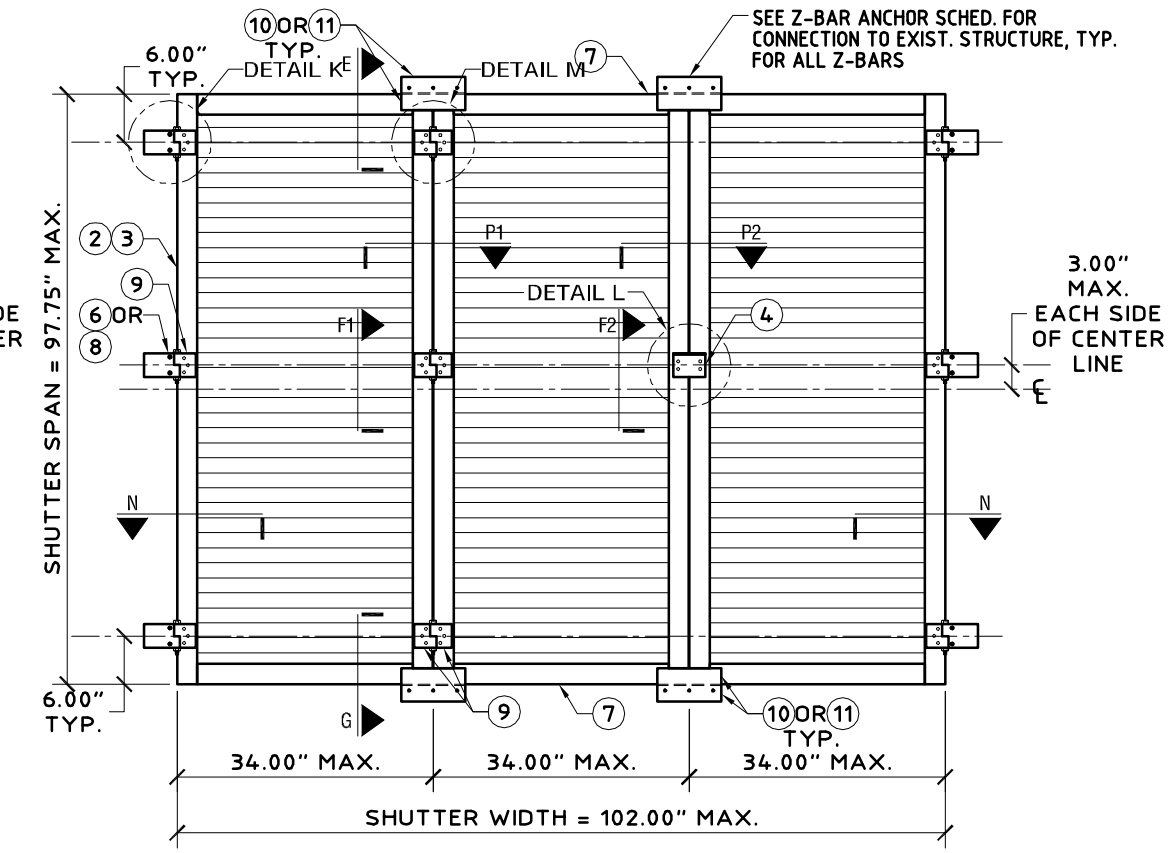

B TYPICAL ELEVATION 3 PANELS
SCALE: 1/2" = 1'-0"

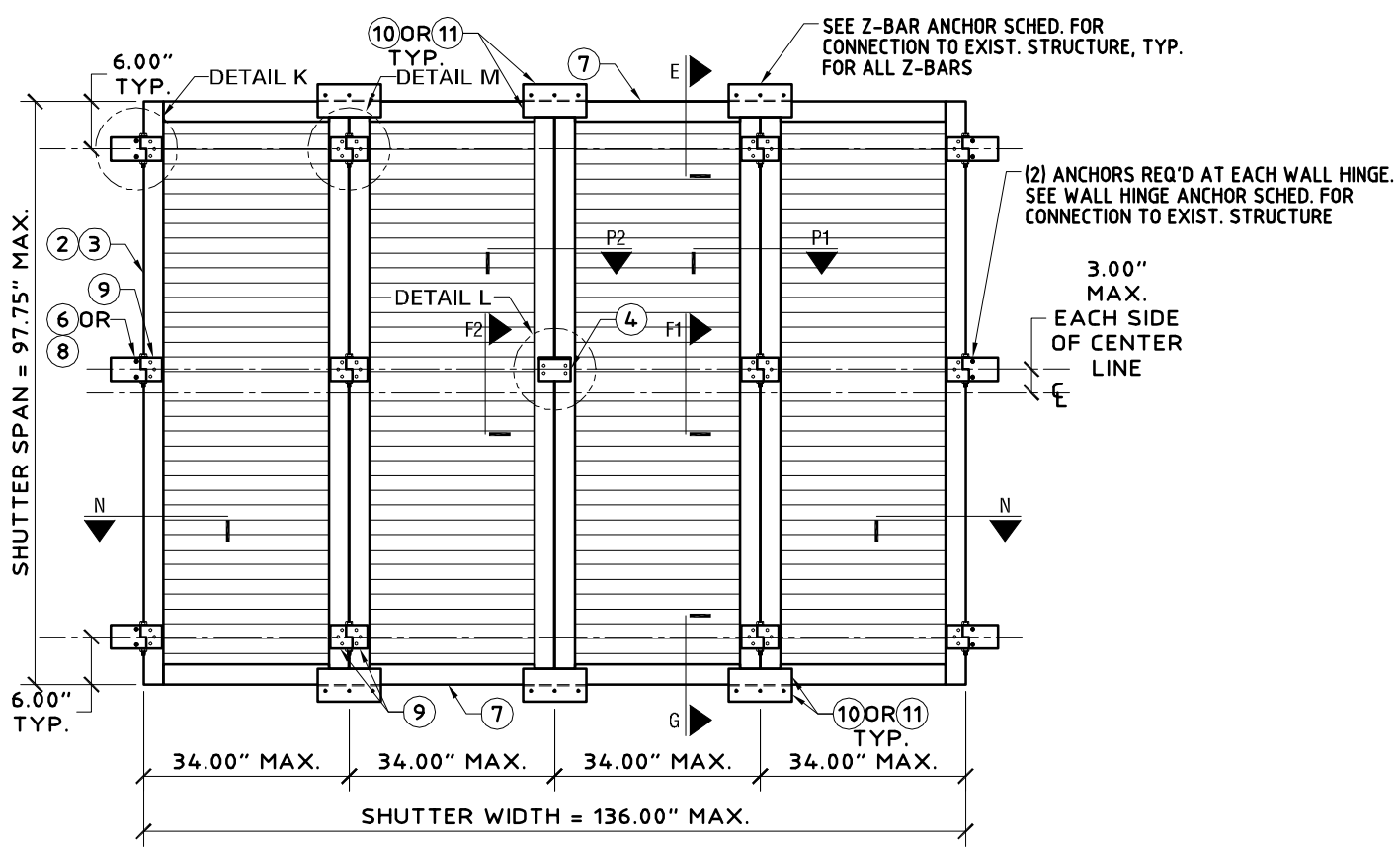

C TYPICAL ELEVATION 4 PANELS
SCALE: 1/2" = 1'-0"

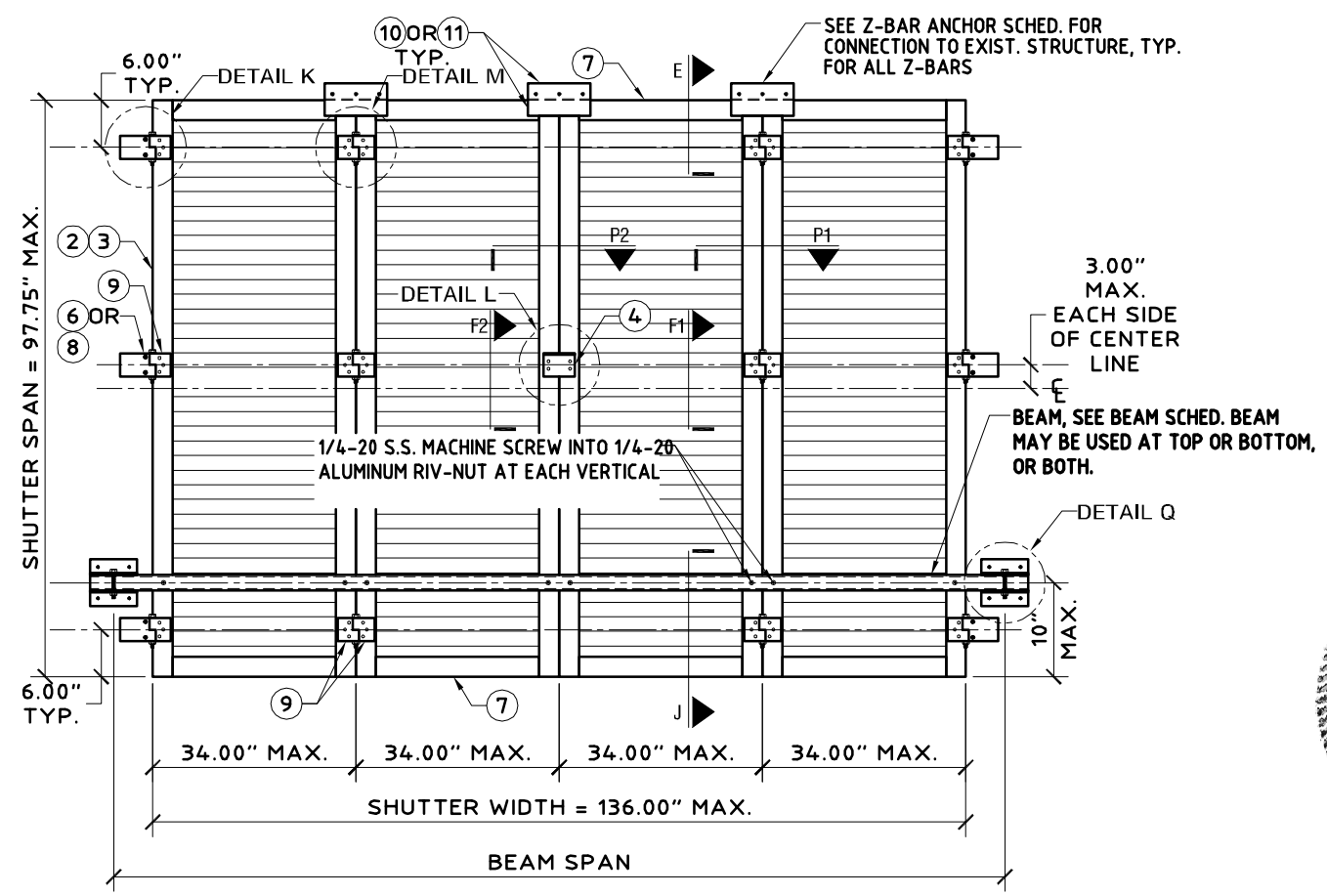

D TYPICAL ELEVATION WITH BEAM (2, 3, OR 4 PANELS)
SCALE: 1/2" = 1'-0"

WALL HINGE ANCHOR SCHEDULE

MANUF.	DIAMETER	DESCRIPTION	MIN. EDGE DISTANCE	MIN. EMBED.	MIN. SPACING
CONCRETE (MIN. f'c = 3192 PSI)					
ITW	1/4 IN.	TAPCON	2.50 IN	1.00 IN	2.00 IN
ITW	5/16 IN.	TAPCON XL	2.50 IN	1.25 IN	2.00 IN
HOLLOW CONCRETE BLOCK					
ELCO	1/4 IN.	ULTRACON	2.50 IN	1.25 IN	2.00 IN
ALL POINTS	1/4 IN.	SOLID-SET	3.00 IN	0.88 IN	2.00 IN
WOOD (SOUTHERN YELLOW PINE, G=0.55)					
	1/4 IN.	LAG SCREW	0.75 IN	1.25 IN	1.50 IN
	1/4 IN.	SHEET METAL SCREW	0.75 IN	1.50 IN	1.50 IN
WOOD (SPRUCE-PINE-FIR, G=0.42)					
	1/4 IN.	LAG SCREW	0.75 IN	1.25 IN	1.50 IN
	1/4 IN.	SHEET METAL SCREW	0.75 IN	1.50 IN	1.50 IN

KNEZEVICH ASSOCIATES
Consulting Engineers
Texas Registered Engineering Firm No. 11225
2590 S.W. 105th Terrace * Davie, Florida 33324
T (954) 821-6933 * F (954) 452-7960
email: VJK@Knezevich.com

Copyright © 2009 VJKnezevich & Associates, LLC d/b/a Knezevich Associates

HINGED COLONIAL SHUTTER SYSTEM

Town&Country INDUSTRIES
Wholesale Aluminum and Building Products
A DIVISION OF ABC SUPPLY CO., INC.
400 WEST MCNAB ROAD * FORT LAUDERDALE, FL 33309
PHONE 954.970.9999 * FAX 954-970-9988

revisions

no	date	by	description
1	5/28/2009	VJK	REVISE ENGINEER LICENSE INFORMATION
2	5/29/2009	VJK	GENERAL NOTES

V.J. Knezevich
Professional Engineer
Texas License No.: PE 102908
VLADIMIR J. KNEZEVICH
MAY 29 2009
ARV 1 AS NOTED
05/27/2009

drawing no.
08-361
sheet 2 of 5

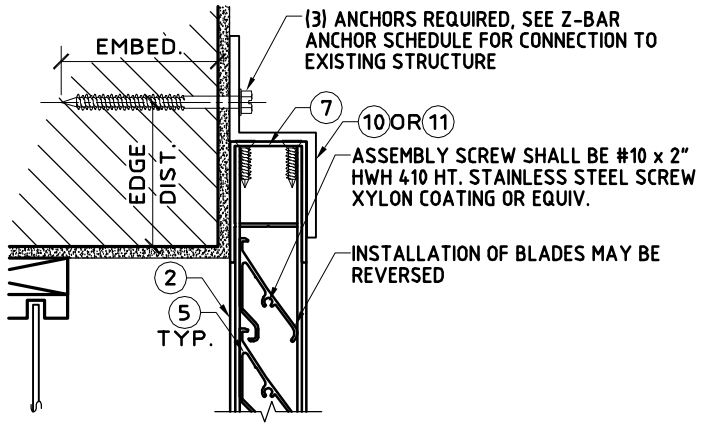

E1 TYPICAL TOP WALL MOUNT
SCALE: 3" = 1'-0"

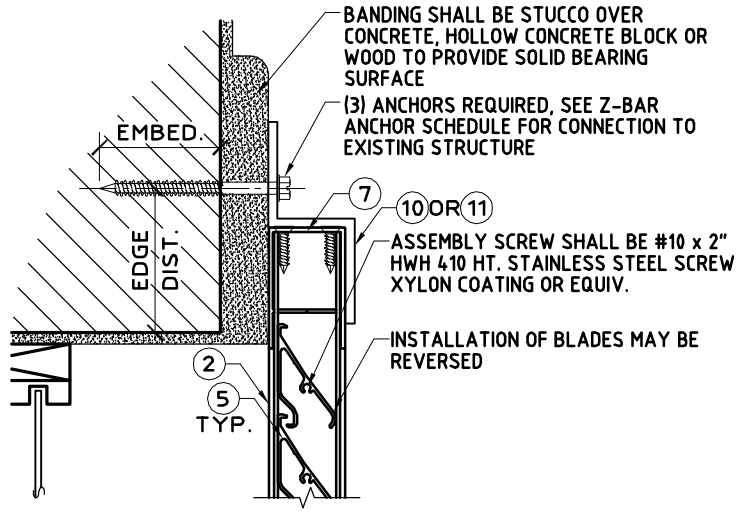

E2 ALTERNATE TOP WALL MOUNT
SCALE: 3" = 1'-0"

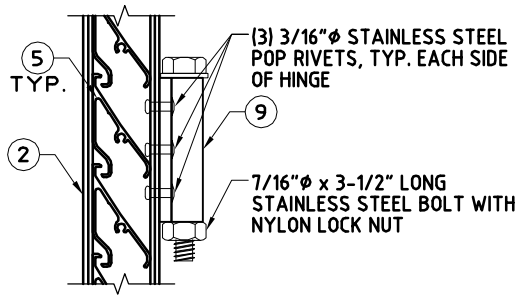

F1 TYPICAL PANEL HINGE CONNECTION
SCALE: 3" = 1'-0"

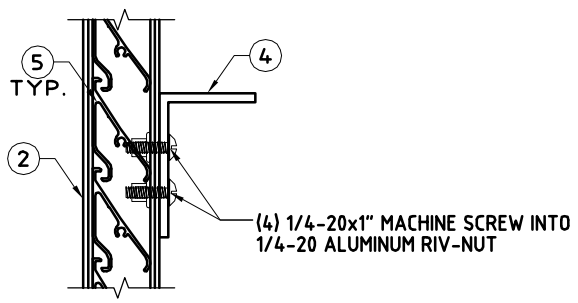

F2 TYPICAL CENTER CLIP CONNECTION
SCALE: 3" = 1'-0"

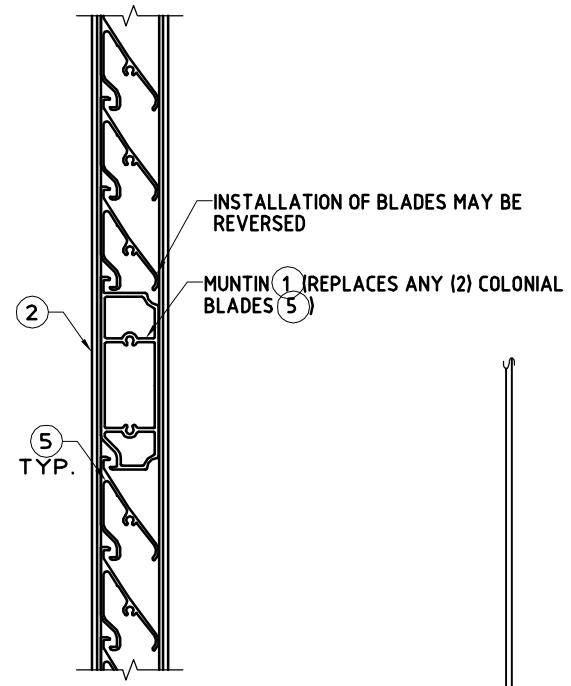

H ALTERNATE BLADE
SCALE: 3" = 1'-0"

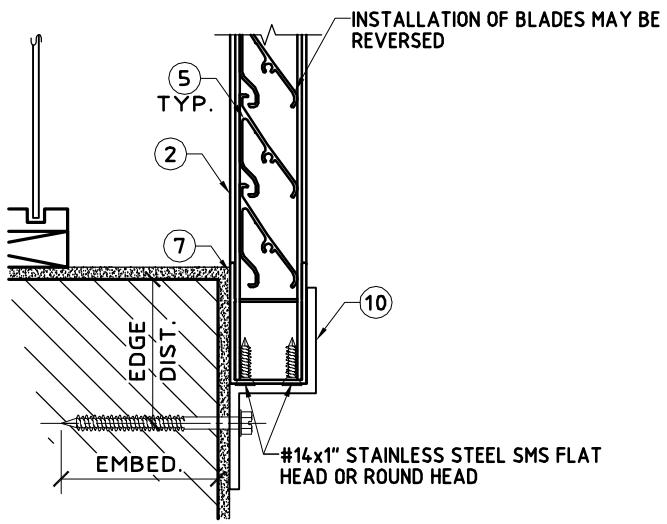

G1 TYPICAL BOTTOM WALL MOUNT
SCALE: 3" = 1'-0"

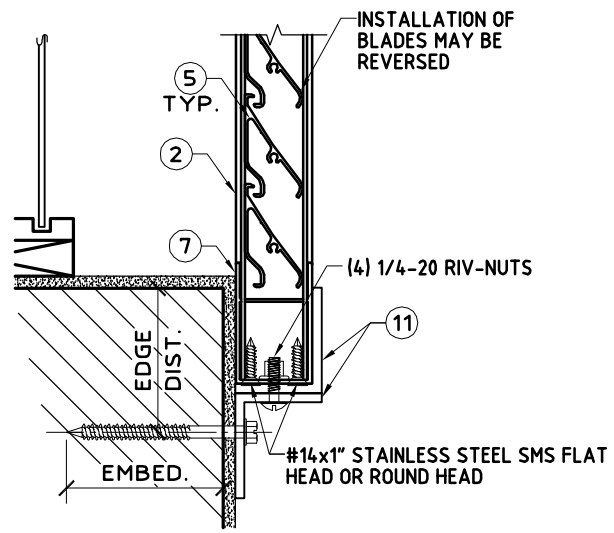

G2 ALTERNATE WALL MOUNT
SCALE: 3" = 1'-0"

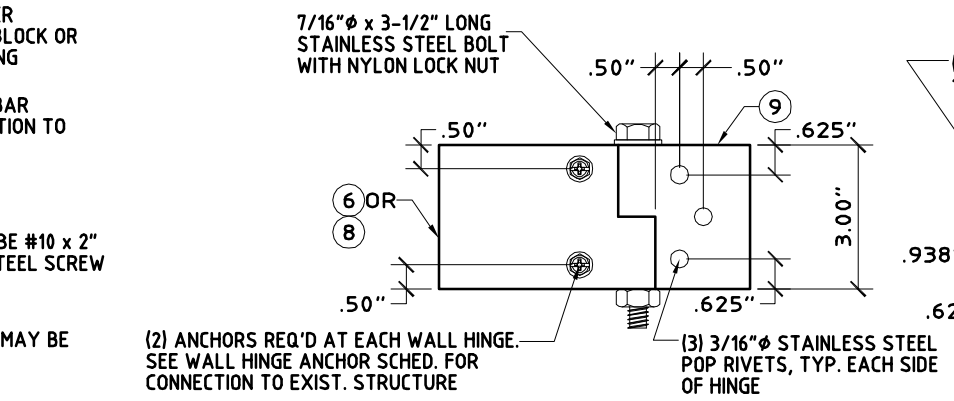

K TYPICAL WALL HINGE
SCALE: 3" = 1'-0"

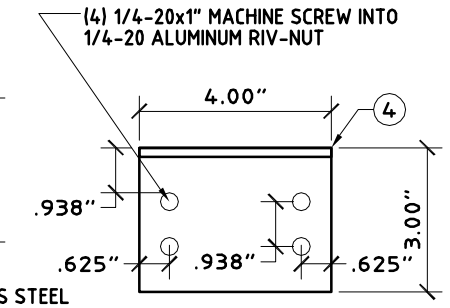

L TYPICAL CENTER CLIP
SCALE: 3" = 1'-0"

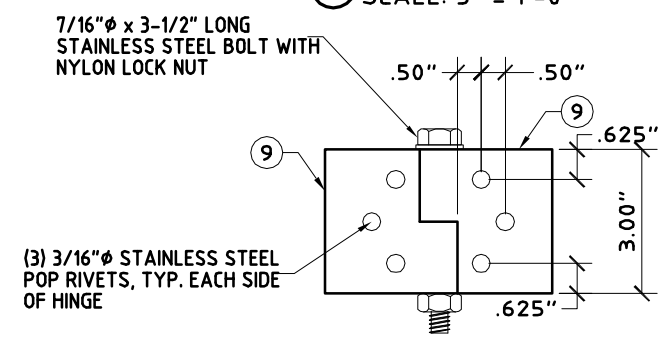

M TYPICAL PANEL HINGE
SCALE: 3" = 1'-0"

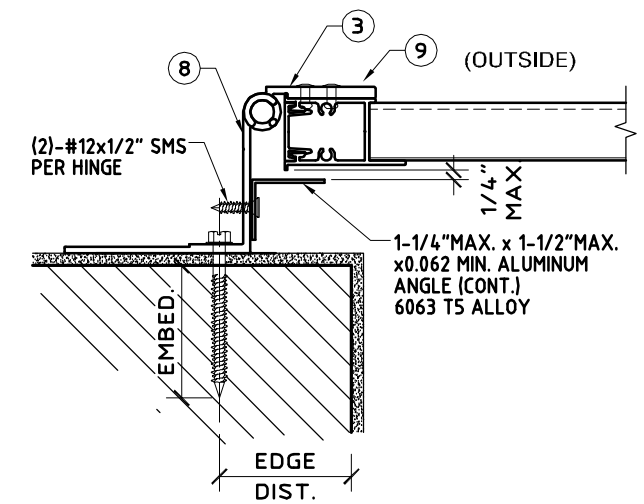

K SIDE CLOSURE DETAIL
SCALE: 3" = 1'-0"

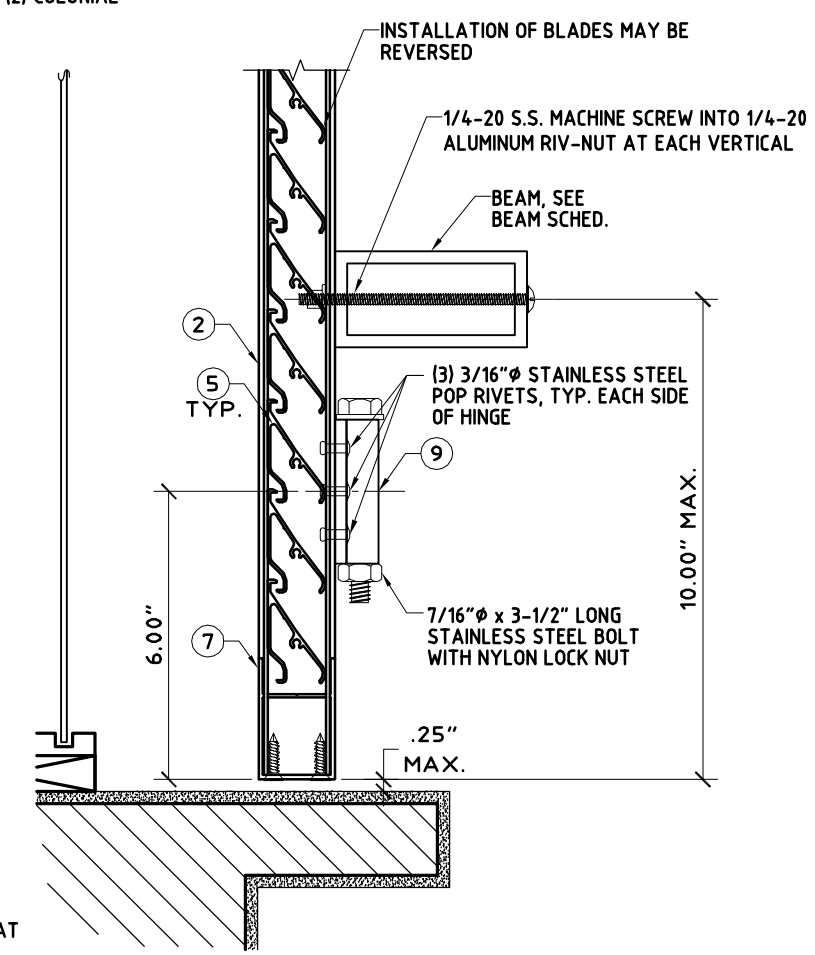

J TYPICAL TRAP MOUNT
SCALE: 3" = 1'-0"

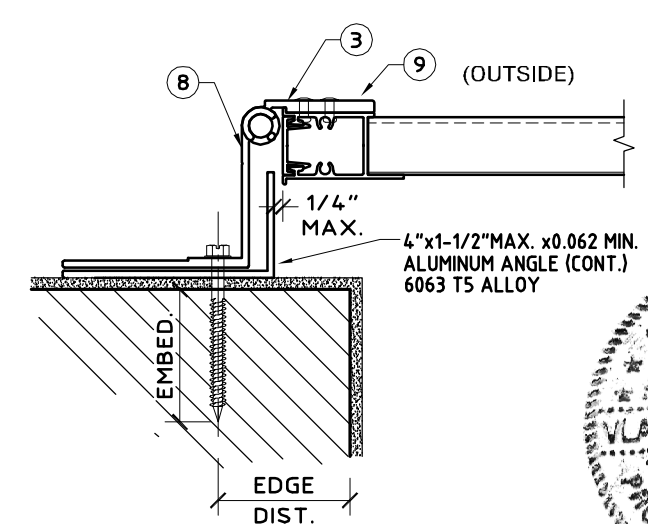

Ka ALTERNATE SIDE CLOSURE DETAIL
SCALE: 3" = 1'-0"

KNEZEVICH ASSOCIATES
Consulting Engineers
Texas Registered Engineering Firm No. 11225
2590 S.W. 105th Terrace * Davie, Florida 33324
T (954) 821-6933 * F (954) 452-7960
email: VJK@Knezevich.com

Copyright © 2009 VJKnezevich & Associates, LLC d/b/a Knezevich Associates

HINGED COLONIAL SHUTTER SYSTEM

Town&Country INDUSTRIES
Wholesale Aluminum and Building Products
A DIVISION OF ABC SUPPLY CO., INC.
400 WEST MCNAB ROAD * FORT LAUDERDALE, FL 33309
PHONE 954.970.9999 * FAX 954-970-9988

revisions

no	date	by	description
1	5/28/2009	VJK	REVISE ENGINEER LICENSE INFORMATION
2	5/29/2009	VJK	GENERAL NOTES

V.J. Knezevich
Professional Engineer
Texas License No.: PE 102908
VLADIMIR J. KNEZEVICH
MAY 29 2009
ARV 1 - AS NOTED
05/27/2009

drawing no.
08-361
sheet 3 of 5

C:_MiDi_Projects\MiDisparate_CAD\VJKnezevich\CAD2008\Town_and_Country\08-361\R2-sub\08-361-03.dwg, 5/29/2009 4:11:45 PM, 11 x 17, 1:1, www.MiDisparate.com

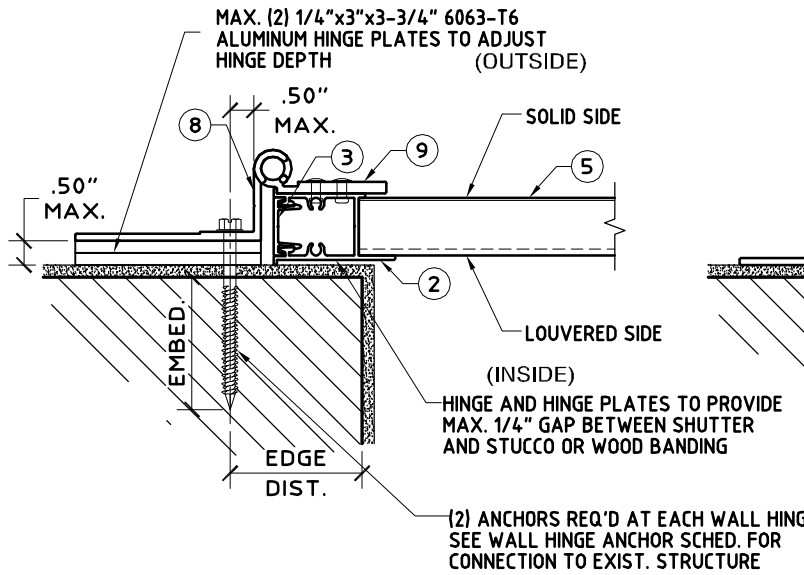

N1 TYPICAL WALL HINGE CONNECTION
SCALE: 3" = 1'-0"

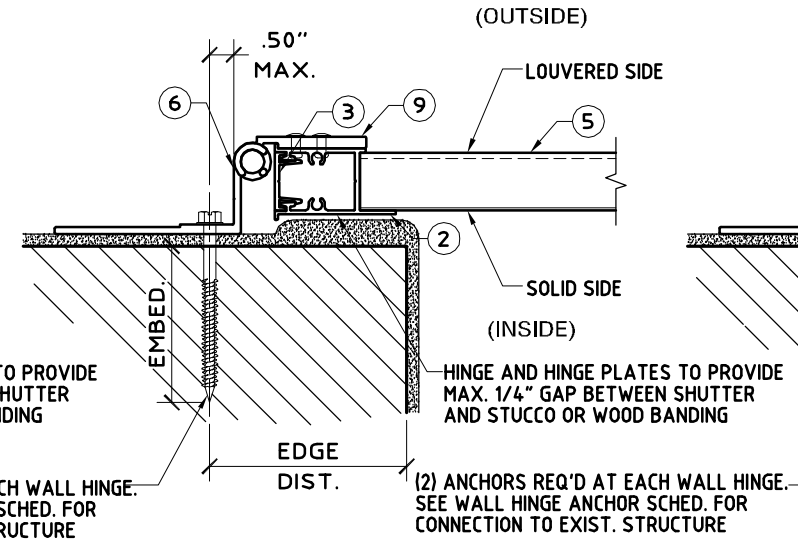

N2 ALTERNATE WALL HINGE CONNECTION
SCALE: 3" = 1'-0"

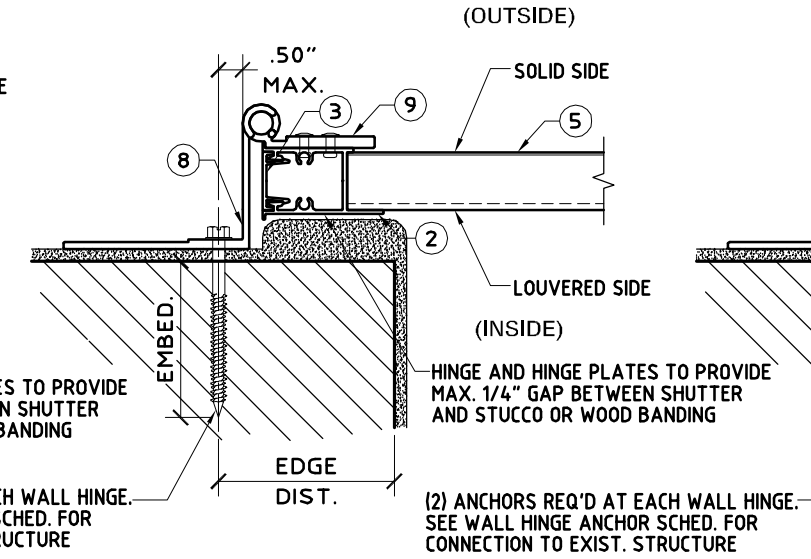

N3 ALTERNATE WALL HINGE CONNECTION
SCALE: 3" = 1'-0"

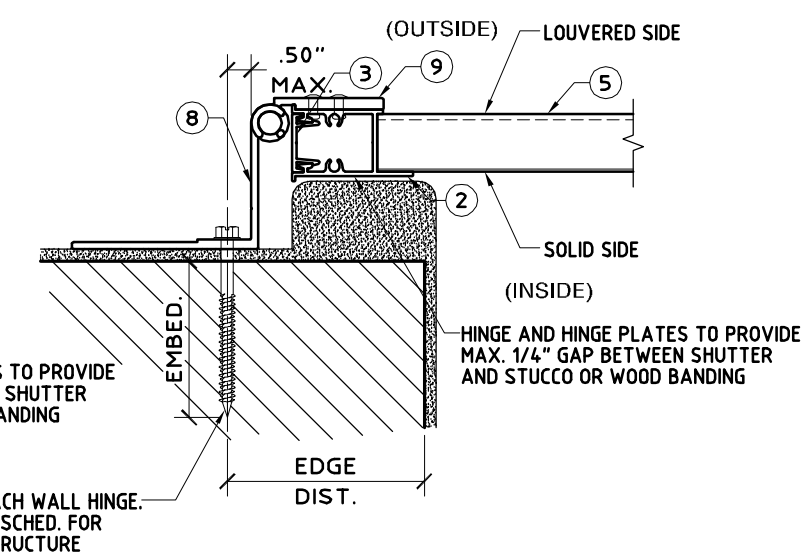

N4 ALTERNATE WALL HINGE CONNECTION
SCALE: 3" = 1'-0"

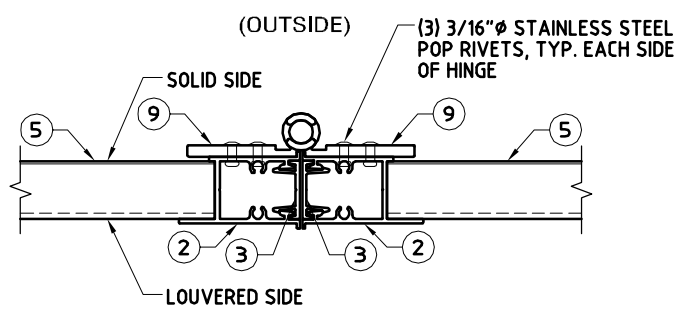

P1 TYPICAL PANEL HINGE CONNECTION
SCALE: 3" = 1'-0"

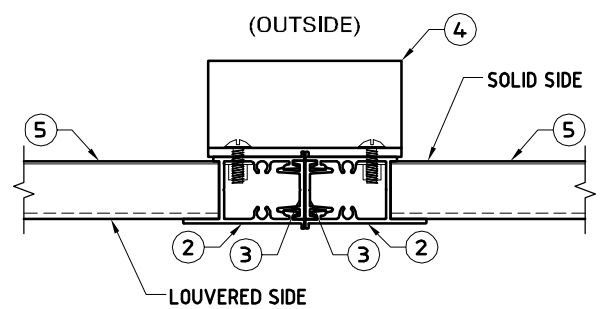

P2 TYPICAL CENTER CLIP CONNECTION
SCALE: 3" = 1'-0"

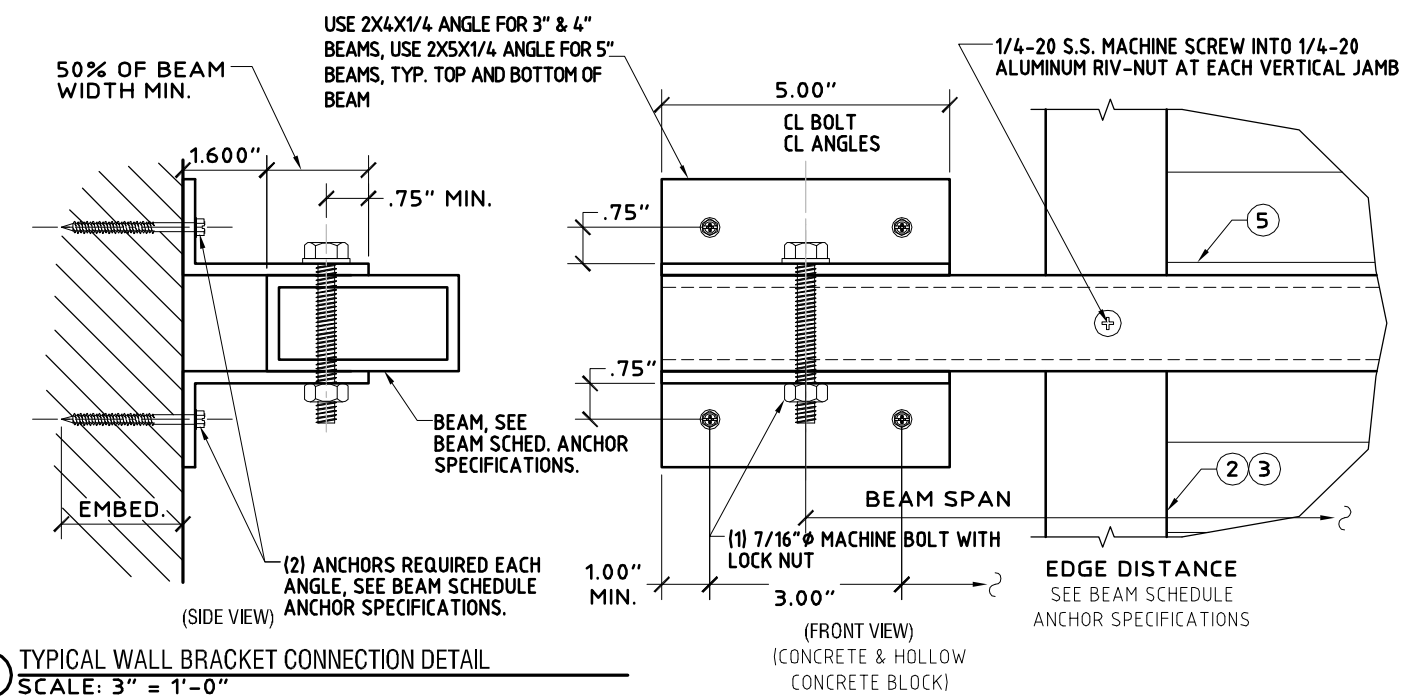

Q TYPICAL WALL BRACKET CONNECTION DETAIL
SCALE: 3" = 1'-0"

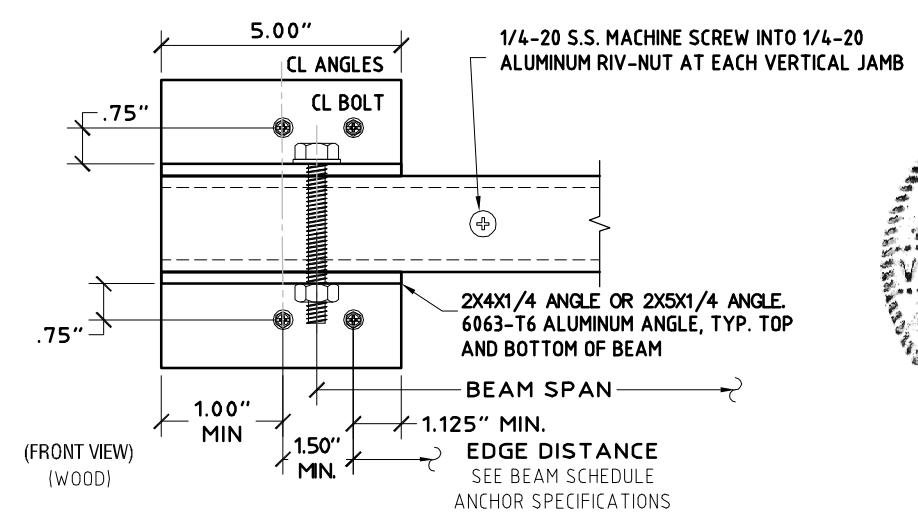

BEAM SCHEDULE

BEAM SIZE	SHUTTER SPAN	BEAM SPAN	WALL BRACKET ANCHOR TYPES: CONCRETE (MIN. f'c = 3.3 KSI)	NORMAL WEIGHT HOLLOW CONCRETE BLOCK	WOOD (SOUTHERN YELLOW PINE, G=0.55 OR SPRUCE-PINE-FIR, G=0.42)
2" x 3" x 1/8" (6063-T6)	8'-1.75"	5'-8"	A, B, C	A, B, C	B, C
	6'-8"	6'-3"	A, B, C	A, B, C	B, C
	5'-10"	6'-7"	A, B, C	A, B, C	B, C
2" x 4" x 1/8" (6063-T6)	8'-1.75"	7'-0"	A, B, C	A, B, C	B, C
	6'-8"	7'-8"	A, B, C	A, B, C	B, C
	5'-10"	8'-1"	A, B, C	A, B, C	B, C
2" x 5" x 1/8" (6063-T6)	8'-1.75"	8'-3"	A, B, C	A, C	B, C
	6'-8"	9'-0"	A, B, C	A, B, C	B, C
	5'-10"	9'-6"	A, B, C	A, B, C	B, C
2" x 4" x 1/4" (6061-T6)	8'-1.75"	10'-10"	A, B, C	A, C	B, C
	6'-8"	11'-9"	A, B, C	A, C	B, C
	5'-10"	12'-1"	A, B, C	A, C	B, C

ANCHOR TYPES (FOUR ANCHORS REQUIRED EACH END OF BEAM)

A= **1/4"x20x1" ALL POINTS SOLID-SET ANCHORS.**
FOR CONCRETE: 7/8" MINIMUM EMBEDMENT WITH 3" MINIMUM EDGE DISTANCE AND 3" SPACING.
FOR HOLLOW CONCRETE BLOCK: 7/8" MINIMUM EMBEDMENT WITH 3" MINIMUM EDGE DISTANCE AND 3" SPACING.

B= **1/4"ø ELCO MALE / FEMALE "PANELMATE" WITH 1/4-20 MACHINE SCREW OR NUT**
FOR CONCRETE: 2" MINIMUM EMBEDMENT WITH 3" MINIMUM EDGE DISTANCE AND 3" SPACING.
FOR HOLLOW CONCRETE BLOCK: 1-1/4" MINIMUM EMBEDMENT WITH 2" MINIMUM EDGE DISTANCE AND 3" SPACING.
FOR WOOD: 1-7/8" MINIMUM EMBEDMENT WITH 3/4" MINIMUM EDGE DISTANCE AND 1.5" SPACING.

C= **1/4"ø ITW TAPCON SG**
FOR CONCRETE: 1-3/4" MINIMUM EMBEDMENT WITH 2-1/2" MINIMUM EDGE DISTANCE AND 3" SPACING.
FOR HOLLOW CONCRETE BLOCK: 1-1/4" MINIMUM EMBEDMENT WITH 2-1/2" MINIMUM EDGE DISTANCE AND 3" SPACING.
FOR WOOD: 1-1/2" MINIMUM EMBEDMENT WITH 3/4" MINIMUM EDGE DISTANCE AND 1.5" SPACING.

KNEZEVICH ASSOCIATES
Consulting Engineers
Texas Registered Engineering Firm No. 11225
2590 S.W. 105th Terrace * Davie, Florida 33324
T (954) 821-6933 * F (954) 452-7960
email: VJK@Knezevich.com

Copyright © 2009 VJKnezevich & Associates, LLC d/b/a Knezevich Associates

HINGED COLONIAL SHUTTER SYSTEM

Town&Country INDUSTRIES
Wholesale Aluminum and Building Products
A DIVISION OF ABC SUPPLY CO., INC.
400 WEST MCNAB ROAD * FORT LAUDERDALE, FL 33309
PHONE 954.970.9999 * FAX 954-970-9988

revisions

no	date	by	description
1	05/28/2009	VJK	REVISE ENGINEER LICENSE INFORMATION
2	05/29/2009	VJK	GENERAL NOTES

V.J. Knezevich
Professional Engineer
Texas License No.: PE 102908
VLADIMIR J. KNEZEVICH
MAY 29 2009
ARV 1 - AS NOTED
05/27/2009

drawing no.
08-361
sheet 4 of 5

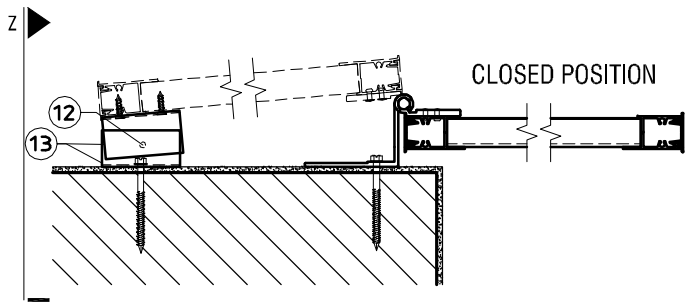

R PLAN VIEW 1
SCALE: 1-1/2" = 1'-0"

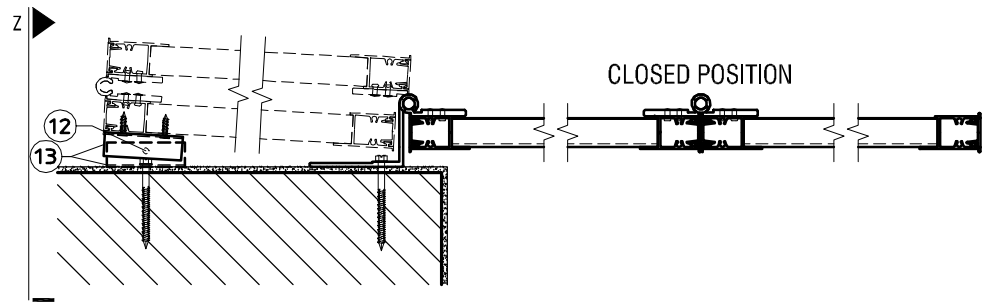

S PLAN VIEW 2
SCALE: 1-1/2" = 1'-0"

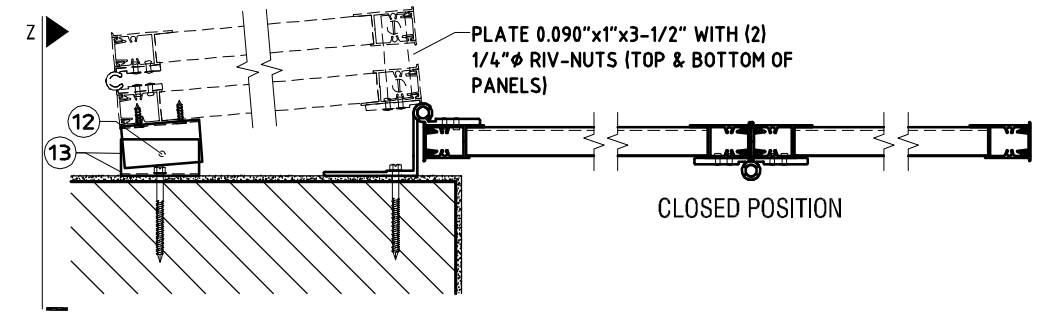

T PLAN VIEW 3
SCALE: 1-1/2" = 1'-0"

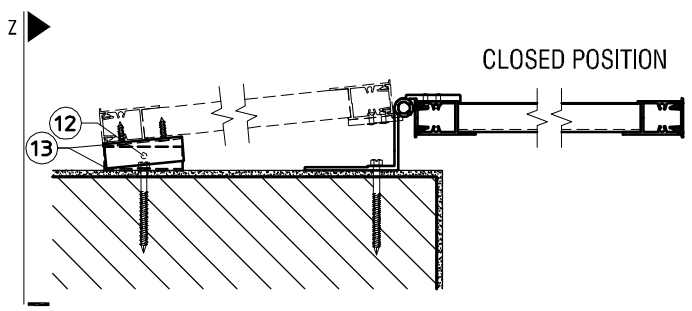

U PLAN VIEW 4
SCALE: 1-1/2" = 1'-0"

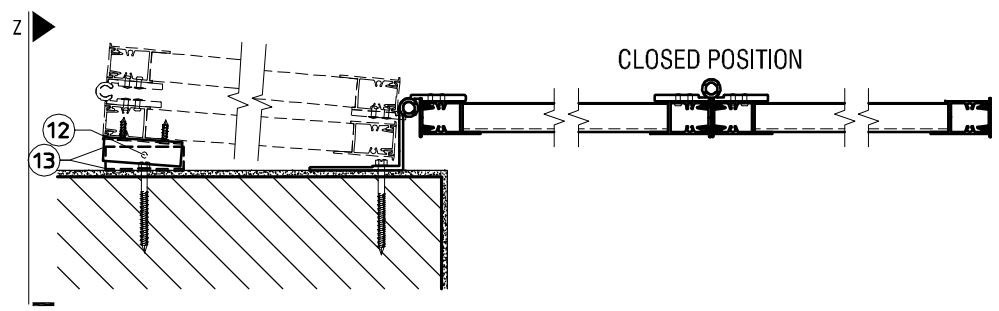

V PLAN VIEW 5
SCALE: 1-1/2" = 1'-0"

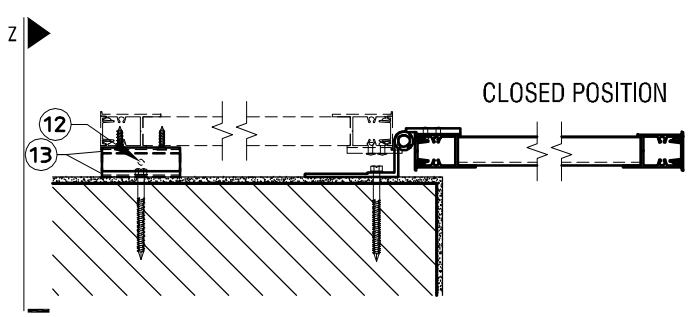

W PLAN VIEW 6
SCALE: 1-1/2" = 1'-0"

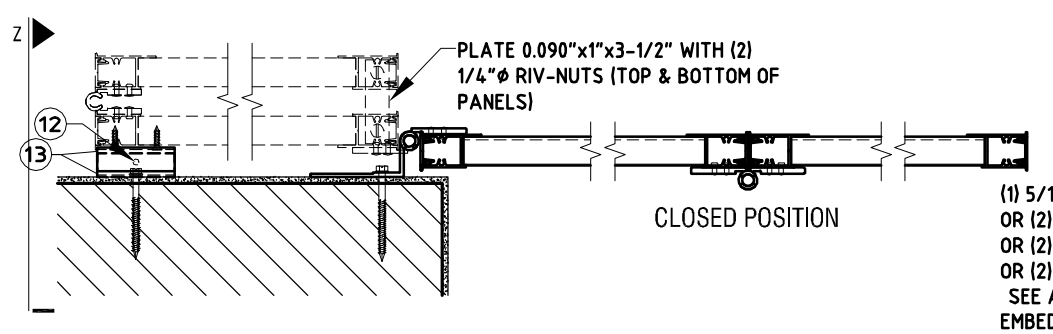

X PLAN VIEW 7
SCALE: 1-1/2" = 1'-0"

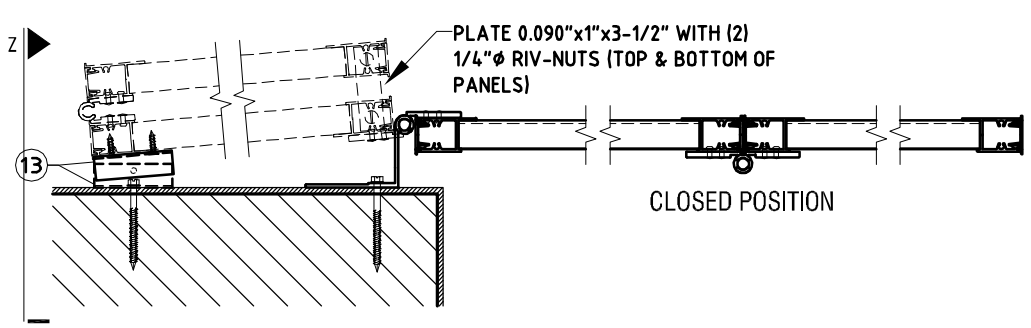

Y PLAN VIEW 8
SCALE: 1-1/2" = 1'-0"

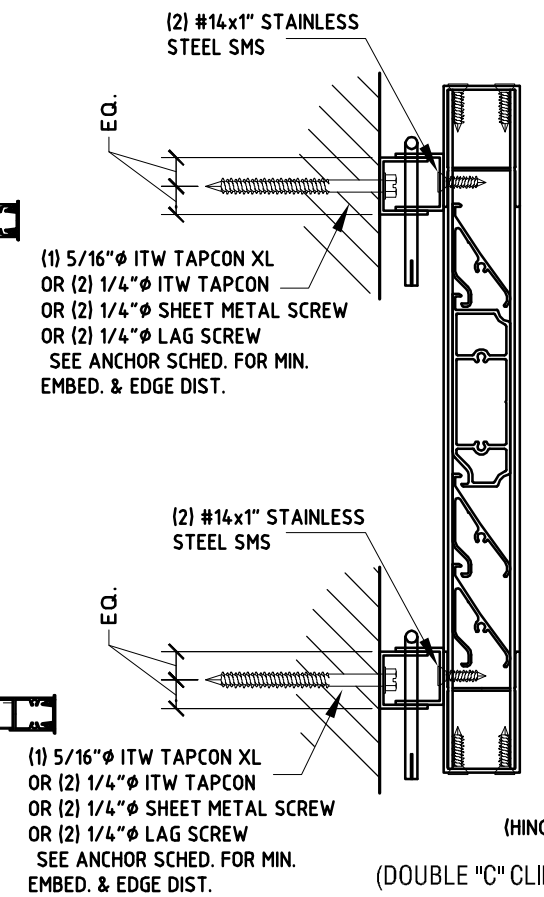

(DOUBLE "C" CLIP)

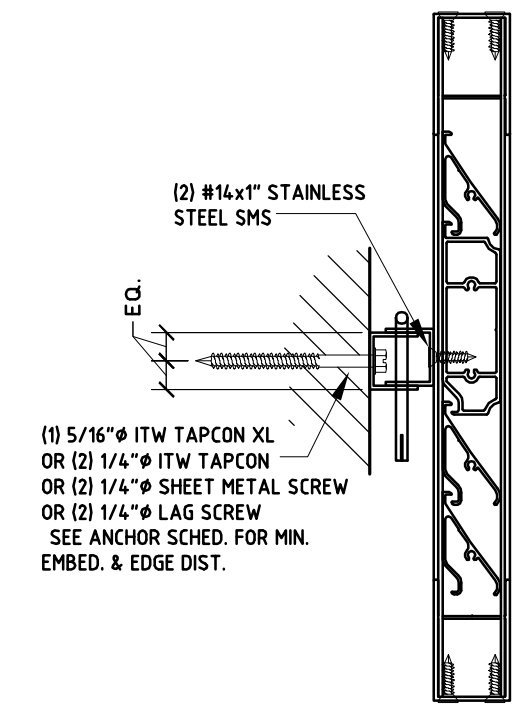

(SINGLE "C" CLIP)

(HINGES NOT SHOWN FOR CLARITY)

NOTE:
CLIPS REQ'D TOP & BOTTOM FOR SPANS > 69". ONE CLIP REQ'D AT MID-SPAN (±3") FOR SPANS ≤ 69".

Z OPEN POSITION LOCK
SCALE: 3" = 1'-0"

Z-BAR ANCHOR SCHEDULE

MANUF.	DIAMETER	DESCRIPTION	MIN. EDGE DISTANCE	MIN. EMBED.	MIN. SPACING
CONCRETE (MIN. f'c = 3350 PSI)					
ELCO	1/4 IN.	STAINLESS STEEL PANELMATE	2.50 IN	2.00 IN	3.00 IN
ELCO	1/4 IN.	MALE PANELMATE (or P..PRO)	2.50 IN	2.00 IN	3.00 IN
ELCO	1/4 IN.	FEMALE PANELMATE	2.50 IN	1.75 IN	3.00 IN
ITW	1/4 IN.	TAPCON SG	2.50 IN	1.75 IN	3.00 IN
ALL-POINTS	1/4 IN.	SOLID-SET ANCHOR	2.00 IN	0.875 IN	3.00 IN
HOLLOW CONCRETE BLOCK					
ELCO	1/4 IN.	STAINLESS STEEL PANELMATE	2.00 IN	1.25 IN	3.00 IN
ELCO	1/4 IN.	MALE PANELMATE (or P..PRO)	2.00 IN	1.25 IN	3.00 IN
ELCO	1/4 IN.	FEMALE PANELMATE	2.00 IN	1.25 IN	3.00 IN
ITW	1/4 IN.	TAPCON SG	2.50 IN	1.25 IN	3.00 IN
ALL-POINTS	1/4 IN.	SOLID-SET ANCHOR	2.50 IN	0.875 IN	3.00 IN
WOOD (SOUTHERN YELLOW PINE, G=0.55)					
ELCO	1/4 IN.	STAINLESS STEEL PANELMATE	0.75 IN	1.875 IN	3.00 IN
ELCO	1/4 IN.	MALE PANELMATE (or P..PRO)	0.75 IN	1.875 IN	3.00 IN
ELCO	1/4 IN.	FEMALE PANELMATE	0.75 IN	1.875 IN	3.00 IN
ITW	1/4 IN.	TAPCON SG	0.75 IN	1.50 IN	3.00 IN
	1/4 IN.	-20 S.S. HANGER BOLT	0.75 IN	1.25 IN	1.50 IN
WOOD (SPRUCE-PINE-FIR (SPF), G=0.42)					
	1/4 IN.	-20 S.S. HANGER BOLT	0.75 IN	1.25 IN	1.50 IN

OPEN POSITION LOCK ANCHOR SCHEDULE

3.362 KSI CONCRETE
(1)-5/16 DIAM. ITW TAPCON XL-1.75" EMB, 2" E.D.
2.899 KSI CONCRETE
(2)-1/4 DIAM. ITW TAPCON -1.75" EMB, 1" E.D.
HOLLOW CONCRETE BLOCK
(1)-5/16 DIAM. ITW TAPCON XL-1.25" EMB, 4" E.D.
(2)-1/4" ITW TAPCON -1.25" EMB, 2.50" E.D.
G=0.42 OR 0.55 WOOD
(2)-1/4" DIAM. SHEET METAL SCREWS-1.75" PENETRATION WITH 3/4" E.D.
(2)-1/4" DIAM. LAG SCREWS-1.5" PENETRATION, 3/4" E.D.

KNEZEVICH ASSOCIATES
Consulting Engineers
Texas Registered Engineering Firm No. 11225
2590 S.W. 105th Terrace * Davie, Florida 33324
T (954) 821-6933 * F (954) 452-7960
email: VJK@Knezevich.com

Copyright © 2009 VJKnezevich & Associates, LLC d/b/a Knezevich Associates

HINGED COLONIAL SHUTTER SYSTEM

Town&Country INDUSTRIES
Wholesale Aluminum and Building Products
A DIVISION OF ABC SUPPLY CO., INC.
400 WEST MCNAB ROAD * FORT LAUDERDALE, FL 33309
PHONE 954.970.9999 * FAX 954-970-9988

revisions

no.	date	by	description
1	4/28/2009	VJK	REVISE-ENGINEER LICENSE INFORMATION
2	5/29/2009	VJK	GENERAL NOTES

V.J. Knezevich
Professional Engineer
Texas License No.: PE 102908
MAY 29 2009

drawn by: ARV
scale: AS NOTED
date: 5/27/2009

drawing no.
08-361

sheet 5 of 5