Town & Country INDUSTRIES
Wholesale Aluminum and Building Products

400 West McNab Road
Fort Lauderdale, FL 33309

.050" ALUMINUM STORM PANEL

Evaluated For Use In The State of Texas

THE PANEL STORM SHUTTER SYSTEM DESCRIBED HEREIN COMPLIES WITH THE 2006 INTERNATIONAL RESIDENTIAL CODE (IRC), SECTION R301.2.1.2 AND THE 2006 INTERNATIONAL BUILDING CODE (IBC), SECTION 1609.1.2 WITH TEXAS REVISIONS SUBJECT TO THE FOLLOWING CONDITIONS:

1. *This system has been tested and evaluated as a large missile impact protective system for installation in the Seaward, Inland I and Inland II areas. This product meets missile level "D" and includes Wind Zone 4 as defined in ASTM E1996.*
2. *No 33-1/3% increase in allowable stress has been used in the design of this product. Anchors into wood were designed with 1.6 load duration.*
3. *Positive and negative design pressures to be used with these drawings shall be determined by others for specific jobs in accordance with the local governing code.*
4. *The system detailed herein is generic and does not provide information for a specific site. The details herein cover connection to wood, concrete and CMU substrates. If site conditions deviate from the conditions detailed herein, a licensed engineer or registered architect shall prepare site specific documents to be used in conjunction with this document.*
5. *Product markings shall be rolled into each panel with spacing in between marking no greater than 24" and shall be labeled as follows:*
   Town & Country Industries
   Ft. Lauderdale, FL
   ASTM Missile Level D
6. *Aluminum storm panels shall be 5052-H32 or 3004-H34 aluminum alloy, tested thickness 0.0495".*
7. *All extrusions shall be 6063-T6 aluminum alloy, unless noted otherwise. All tolerances shall be in accordance with ADM 2005.*
8. *All bolts & washers shall be corrosion resistant in compliance with Section 1716.1 of the 2006 Texas Revisions to the 2006 IBC and in compliance with Section R325.1 of the 2006 Texas Revisions to the 2006 IRC.*
9. *Permit holder shall verify the adequacy of the existing structure to withstand new superimposed loads.*
10. *Storm panels have been designed and tested to the maximum spans and loads shown on these drawings.*
11. *Top & bottom details shown may be interchanged as field conditions dictate. Panels may be mounted horizontally where applicable.*
12. *Panels may be mounted in reverse direction (i.e. interior side of opening). For reverse mounted applications, use the positive design pressures shown in Table 1 for both positive and negative design pressures.*
13. *Panel attachment to mounting hardware using washered wingnut or direct mount anchors are at 12" on center.*
14. *Storm panel connection to mounting hardware extrusions at 12" O.C. maximum.*

TABLE OF CONTENTS

SHEET #	DESCRIPTION
1	TYPICAL ELEVATIONS, GENERAL NOTES
2	BILL OF MATERIALS & COMPONENTS
3	TYPICAL CLOSURE DETAILS
4	TYPICAL CROSS SECTIONS
5	TYPICAL CROSS SECTIONS
6	TYPICAL CROSS SECTIONS
7	TYPICAL CROSS SECTIONS
8	TYPICAL CROSS SECTIONS AND INTERIOR FASTENED PANEL
9	ANCHORING SCHEDULE – CONCRETE
10	ANCHORING SCHEDULE – BLOCK
11	ANCHORING SCHEDULE – WOOD

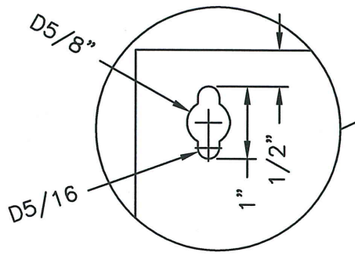

KEYHOLE PUNCH DETAIL

ALTERNATIVE HOLE DIA. OF 5/8" IS ACCEPTABLE.

eyewall Armor™
HURRICANE PROTECTION

TABLE 1 - PANEL SPAN ALLOWABLE DESIGN PRESSURES

PANEL SPAN (in)	ALLOWABLE DESIGN PRESSURE (+) PSF	(-) PSF
144	33.0	35.0
138	39.2	41.1
132	45.4	47.1
126	51.6	53.2
120	57.9	59.3
114	64.1	65.4
108	70.3	71.4
102	76.5	77.5
96	82.7	83.6
90	88.9	89.6
84	95.1	95.7
78	101.4	101.8
72	107.6	107.9
66	113.8	113.9
0-60	120.0	120.0

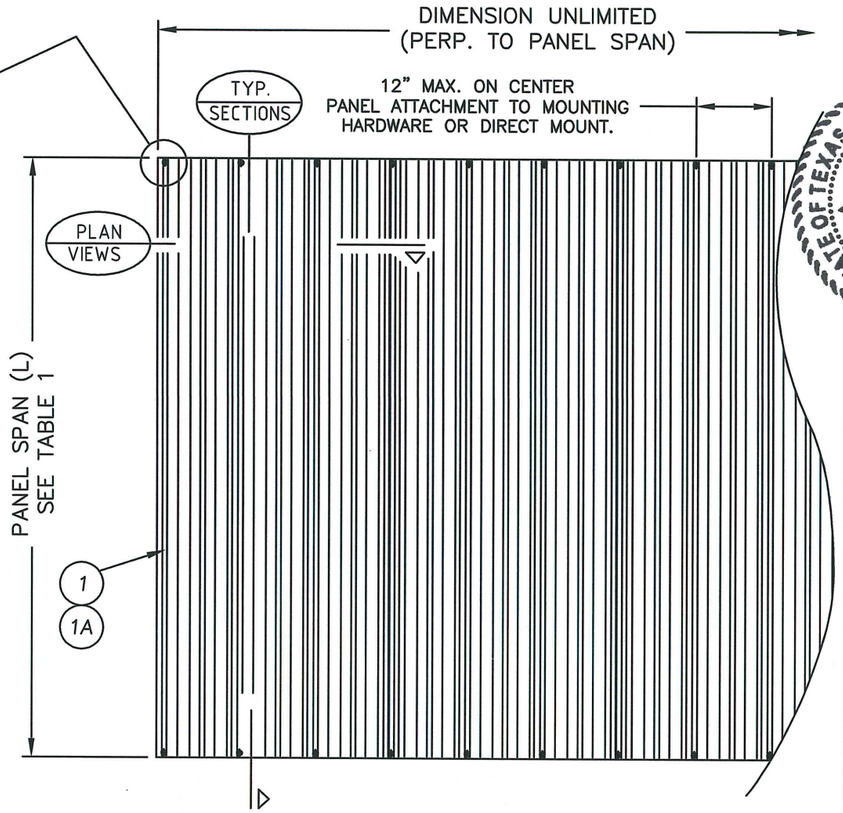

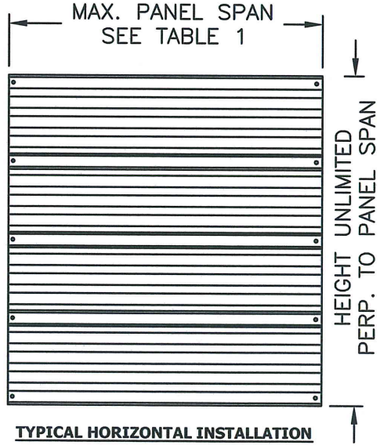

TYPICAL HORIZONTAL INSTALLATION

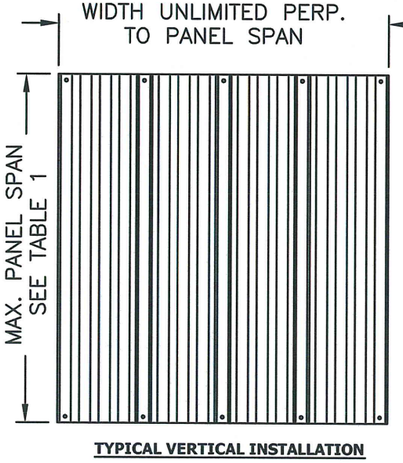

TYPICAL VERTICAL INSTALLATION

NOTE: TOP MAY BE SLOPED OR RADIUSED TO MATCH GEOMETRY OF OPENING. MOUNTING HARDWARE MUST BE ROLL-FORMED TO THE RADIUS; NO NOTCHING OF MOUNTING HARDWARE TO ACHIEVE SHAPES IS ALLOWED.

Documents Prepared By:
R.W. BUILDING CONSULTANTS, INC.
P.O. Box 230 Zephyrhills, FL 33595
Phone No. (813) 659-9191

STATE OF TEXAS
LICENSED
PROFESSIONAL ENGINEER
ALLEN GEZELMAN, P.E. #101678
10/16/08

PRODUCT: STORM SHUTTERS
.050" ALUMINUM STORM PANEL
PART OR ASSEMBLY:
TYPICAL ELEVATIONS AND GENERAL NOTES

NO.	DATE	REVISIONS	BY
1	3/16/09	REVISED (TEXAS P.E.)	AL

DATE: 3/3/08
SCALE: N.T.S.
DWG. BY: AL
CHK. BY: LFS
DRAWING NO.: TX-4024
SHEET 1 OF 11

© 2009 R.W. BUILDING CONSULTANTS INC.

R:\A - Projects\Project Folders\Proj 1301-1400\PF 1358\D. RWBC Drawings\TX-4024\TX-4024.dwg, TX-4024

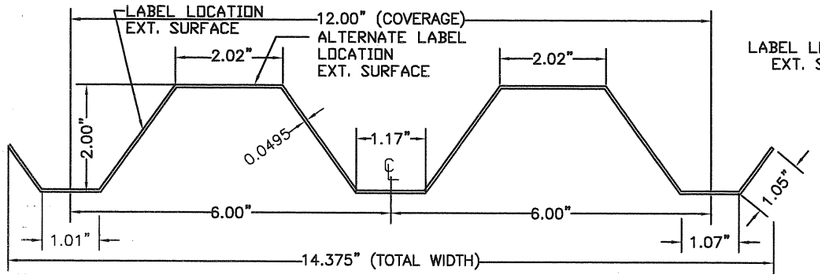

1 STORM PANEL

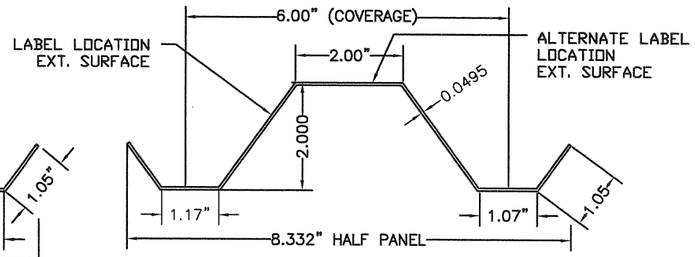

1a HALF STORM PANEL

NOTE: HALF STORM PANEL CAN ONLY BE USED AS AN END PANEL TO CLOSE THE REMAINING OPENING THAT MAY BE LESS THAN FULL PANEL WIDTH

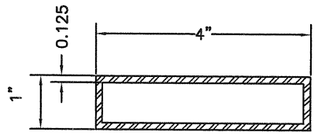

6 TUBE

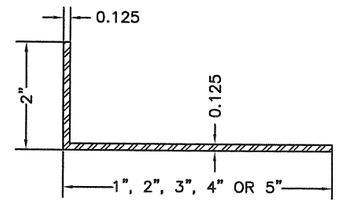

5 ANGLE

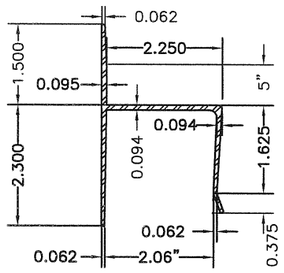

2 "H" HEADER

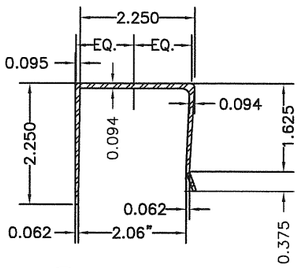

3 "U" HEADER

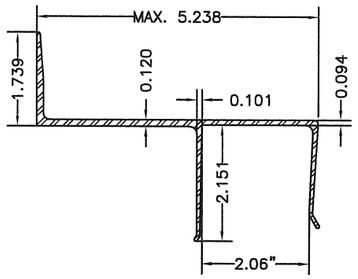

3a BUILD-OUT "U" HEADER

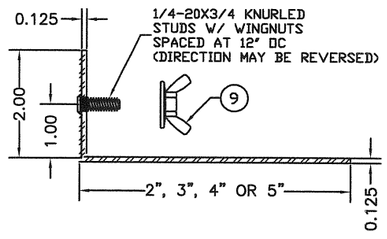

4 STUD ANGLE

SEE NOTE 1

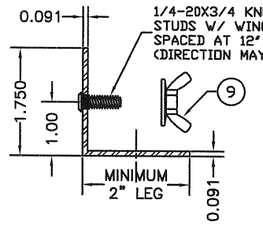

4a STUD ANGLE

SEE NOTE 1

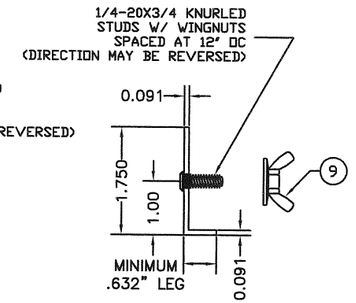

4b STUD ANGLE

SEE NOTE 1

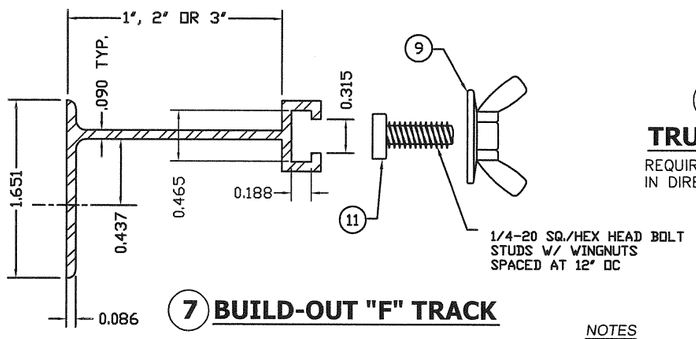

7 BUILD-OUT "F" TRACK

15 1/4-20 TRUSS HEAD BOLT

REQUIRES USE OF KEYHOLE WASHER IN DIRECT MOUNT APPLICATIONS

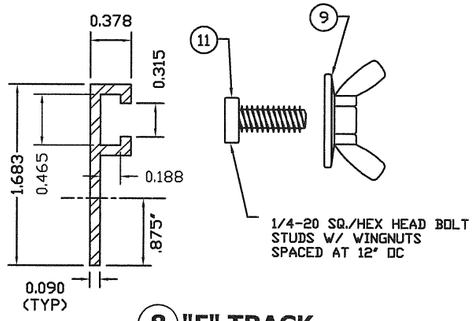

8 "F" TRACK

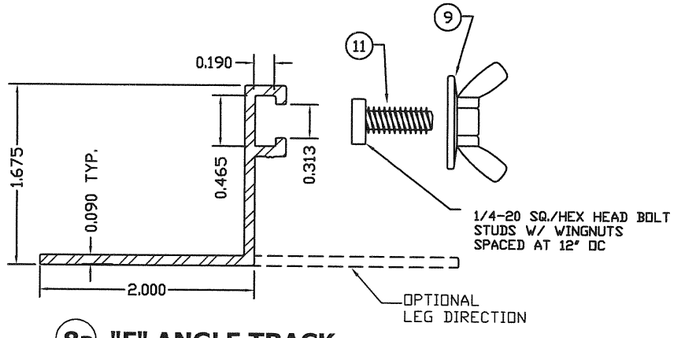

8a "F" ANGLE TRACK

SEE NOTE 1

NOTES

1. *ANCHOR HEADS MUST NOT INTERFERE WITH INSTALLATION OF THE PANEL. ANCHORS SHALL NOT BE INSTALLED MORE THAN 3" FROM END OF EXTRUSIONS. IF ANCHORS MUST BE MOVED TO FACILITATE INSTALLATION OF THE PANEL, ANCHOR SCHEDULE REQUIREMENTS SUCH AS CENTERLINE DISTANCES, EMBEDMENT, EDGE DISTANCE, ETC MUST BE MAINTAINED.*

12 1/4-20 MACHINE BOLT W/NUT

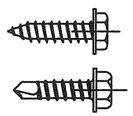

13 #14x3/4 TEK/SMS SCREW

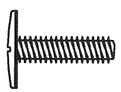

14 1/4-20 SIDEWALK BOLT

11 1/4-20 SQ./HEX HEAD BOLT

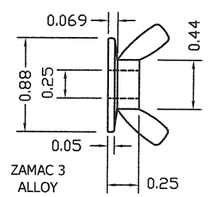

9 WASHER WINGNUT

NON-RECESSED FLAT SURFACE TYPE ONLY

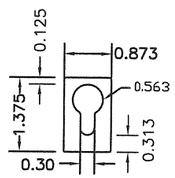

10 KEYHOLE WASHER

20 GA. GALV. STEEL (t=.038") GRADE 40 OR 0.050" ALUM ALLOY (3004-H34)

Documents Prepared By:
R.W. BUILDING CONSULTANTS, INC.
P.O. Box 230 Valrico FL. 33595
Phone No.: 813.659.8197
ALLEN GETELMAN, P.E. TEXAS P.E. #101678

ALLEN D. GETELMAN
101678
LICENSED
PROFESSIONAL ENGINEER
1-8-09

PRODUCT: STORM SHUTTERS
.050" ALUMINUM STORM PANEL
PART OR ASSEMBLY: TYPICAL ELEVATIONS AND GENERAL NOTES

NO.	DATE	REVISIONS	BY
1	3/16/09	REVISED (TEXAS P.E.)	AL

DATE: 3/3/08
SCALE: N.T.S.
DWG. BY: AL
CHK. BY: LFS
DRAWING NO.: TX-4024
SHEET 2 OF 11

© 2009 R.W. BUILDING CONSULTANTS INC.

K:\A - Projects\Project Folders\Proj 1301-1400\PF 1358\D. RWBC Drawings\TX-4024\TX-4024.dwg, 1-2

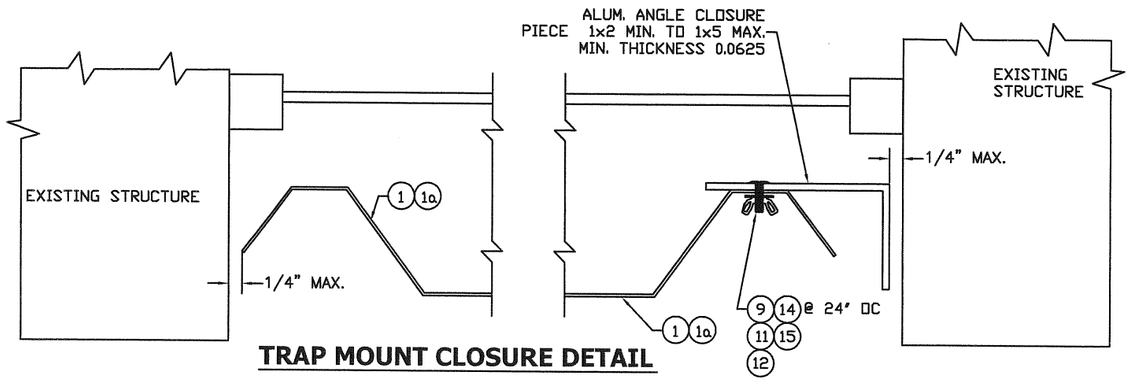

TRAP MOUNT CLOSURE DETAIL

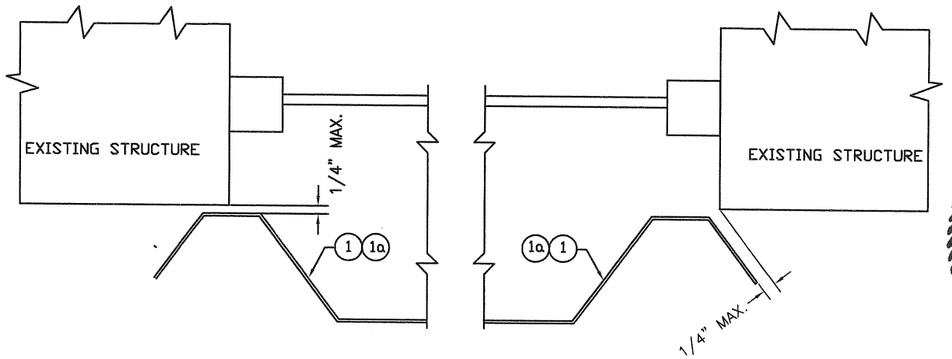

WALL MOUNT CLOSURE DETAIL

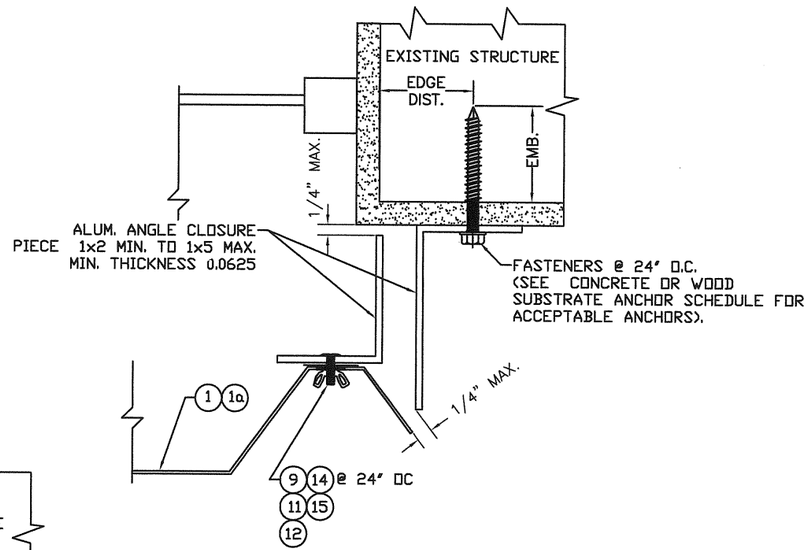

ALTERNATE DETAIL

WOOD OR CONCRETE SUBSTRATE

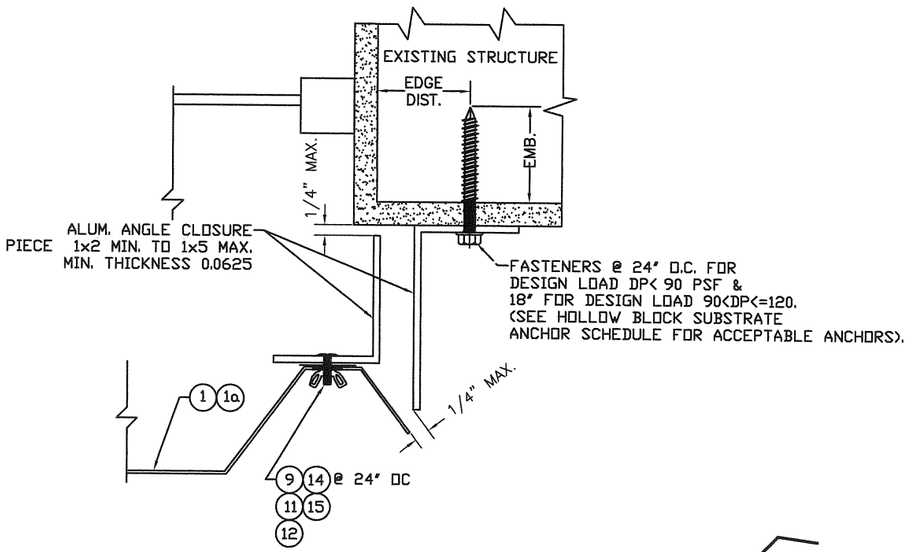

ALTERNATE DETAIL

HOLLOW BLOCK CMU SUBSTRATE

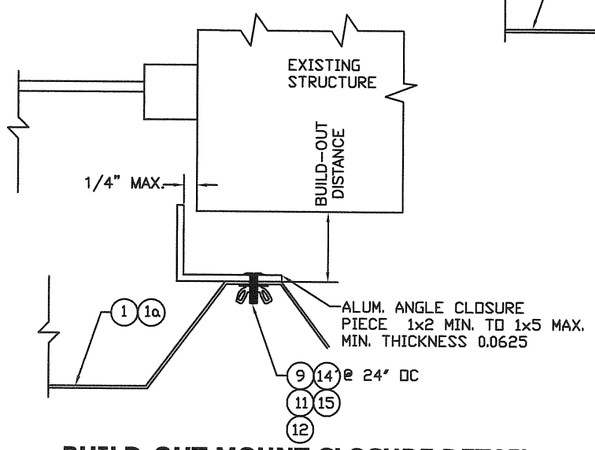

BUILD-OUT MOUNT CLOSURE DETAIL

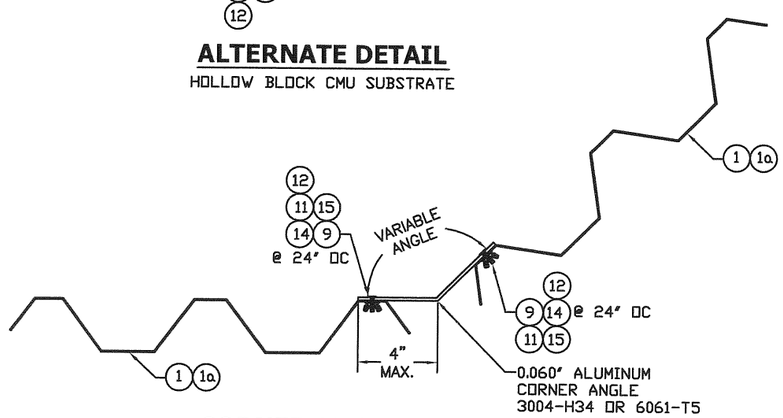

CORNER ANGLE DETAIL

Documents Prepared By: R.W. BUILDING CONSULTANTS, INC. P.O. Box 2[illegible] Valrico, FL 33595 Phone No. 813.659.3197

ALLEN D. GEZELMAN, P.E. #101678 LICENSED PROFESSIONAL ENGINEER

PRODUCT: STORM SHUTTERS .050" ALUMINUM STORM PANEL

PART OR ASSEMBLY: TYPICAL ELEVATIONS AND GENERAL NOTES

NO.	DATE	REVISIONS	BY
1	3/16/09	REVISED (TEXAS P.E.)	AL

DATE: 3/3/08
SCALE: N.T.S.
DWG. BY: AL
CHK. BY: LFS
DRAWING NO.: TX-4024
SHEET 3 OF 11

© 2009 R.W. BUILDING CONSULTANTS INC.

R:\A - Projects\Project Folders\Proj 1301-1400\PF 1358\D. RWBC Drawings\TX-4024\TX-4024.dwg, 1-3

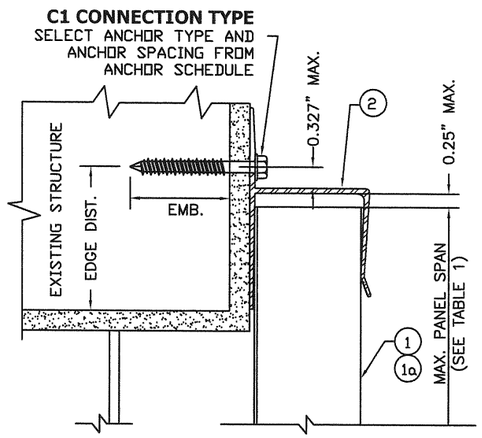

A "H" MOUNT SECTION

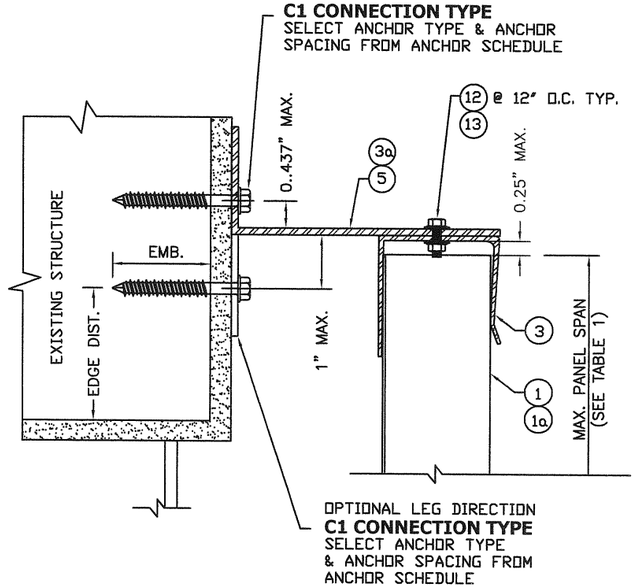

C BUILD-OUT "U" MOUNT SECTION

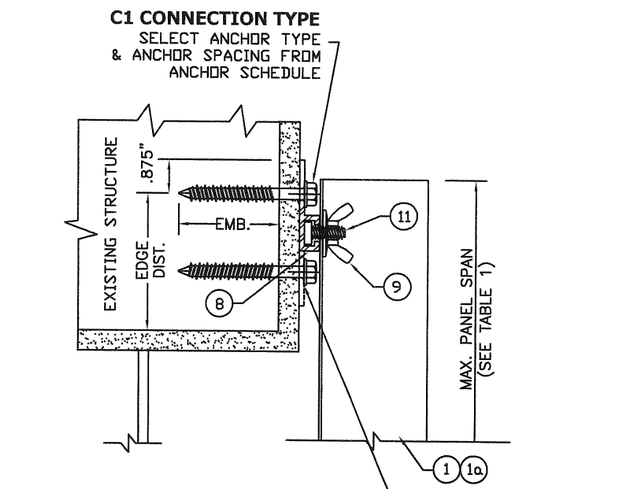

E "F" TRACK MOUNT SECTION

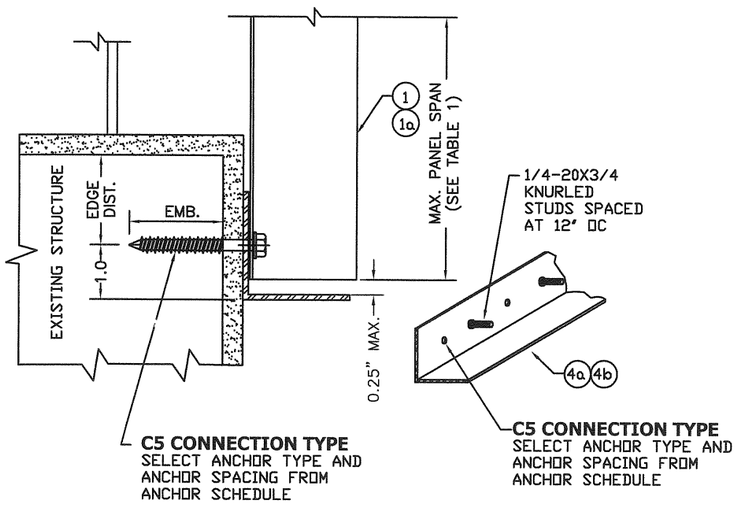

B STUD ANGLE WALL MOUNT SECTION

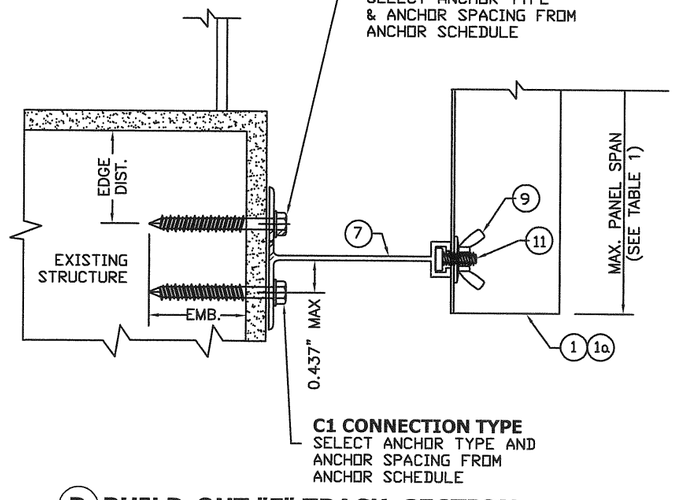

D BUILD-OUT "F" TRACK SECTION

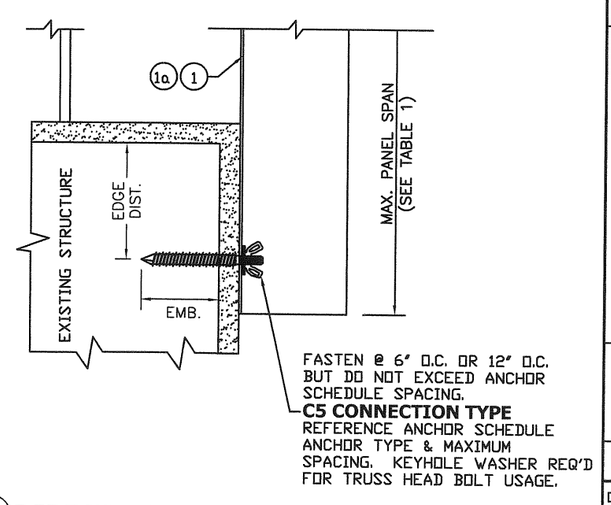

F DIRECT MOUNT SECTION

Documents Prepared By:
R.W. BUILDING CONSULTANTS, INC.
P.O. Box 230 Valrico, FL 33595
Phone No.: 813.659.9197

ALLEN GEZELMAN, P.E. LICENSED PROFESSIONAL ENGINEER #101678 STATE OF TEXAS 18 March 2009

PRODUCT: STORM SHUTTERS .050" ALUMINUM STORM PANEL

PART OR ASSEMBLY: TYPICAL ELEVATIONS AND GENERAL NOTES

NO.	DATE	BY
1	3/16/09	AL

REVISIONS

DATE: 3/3/08
SCALE: N.T.S.
DWG. BY: AL
CHK. BY: LFS
DRAWING NO.: TX-4024
SHEET 4 OF 11

© 2009 R.W. BUILDING CONSULTANTS INC.

R:\A - Projects\Project Folders\Proj 1301-1400\PF 1358\D. RWBC Drawings\TX-4024\TX-4024.dwg, 1-4

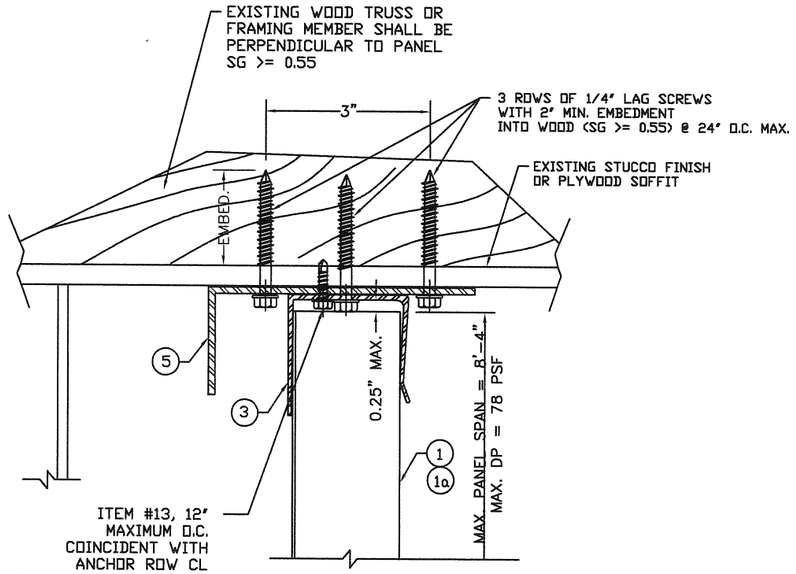

I CEILING MOUNT/BUILD-OUT SECTION
SG >= 0.55

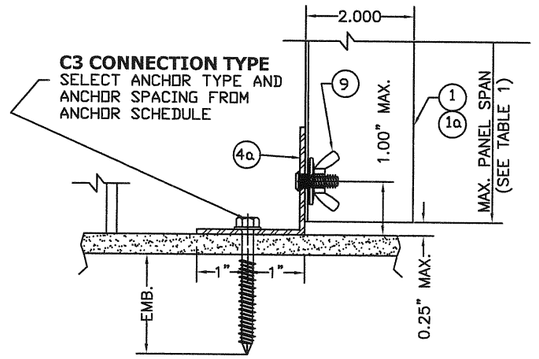

G REVERSE STUD ANGLE MOUNT SECTION

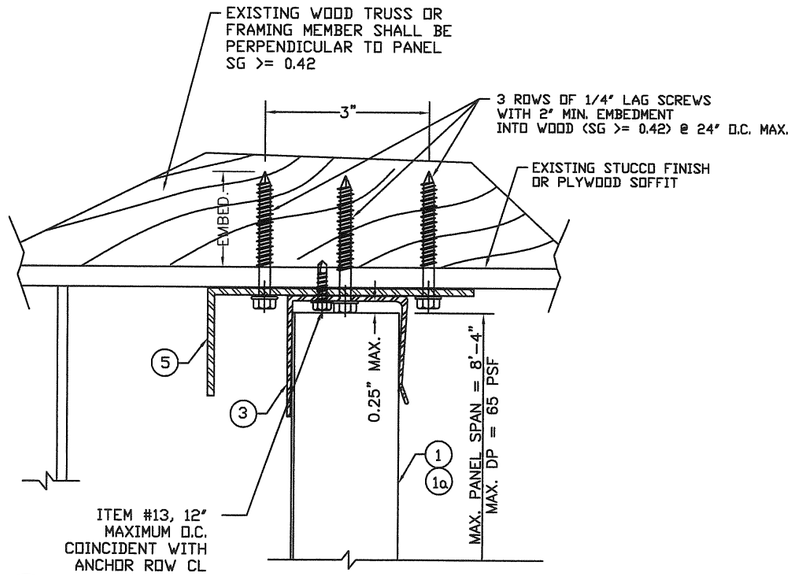

Ia CEILING MOUNT/BUILD-OUT SECTION
SG >= 0.42

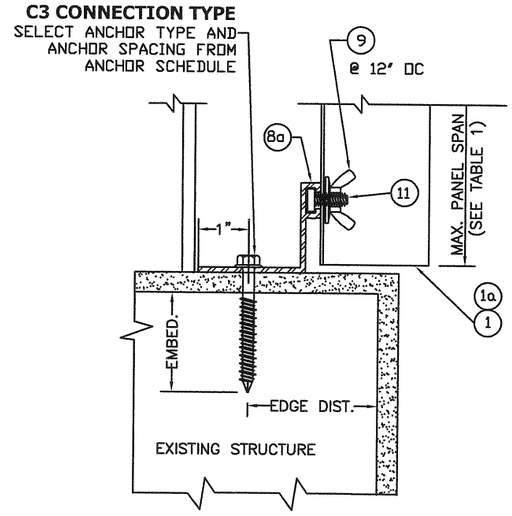

H "F" ANGLE TRACK MOUNT SECTION

Documents Prepared By:
BUILDING CONSULTANTS, INC.
P.O. Box 230 Valrico FL. 33595
Phone No.: 813.659.9197
ALLEN D. GEZELMAN
101678
LICENSED PROFESSIONAL ENGINEER
ALLEN GEZELMAN, P.E. #101678
18 Mar 09

PRODUCT: STORM SHUTTERS .050" ALUMINUM STORM PANEL
PART OR ASSEMBLY: TYPICAL ELEVATIONS AND GENERAL NOTES

NO.	DATE	REVISIONS	BY
1	3/16/09	REVISED (TEXAS P.E.)	AL

DATE: 3/3/08
SCALE: N.T.S.
DWG. BY: AL
CHK. BY: LFS
DRAWING NO.: TX-4024
SHEET 5 OF 11

© 2009 R.W. BUILDING CONSULTANTS INC.

R:\A - Projects\Project Folders\Proj 1301-1400\PF 1358\D. RWBC Drawings\TX-4024\TX-4024.dwg, 1-5

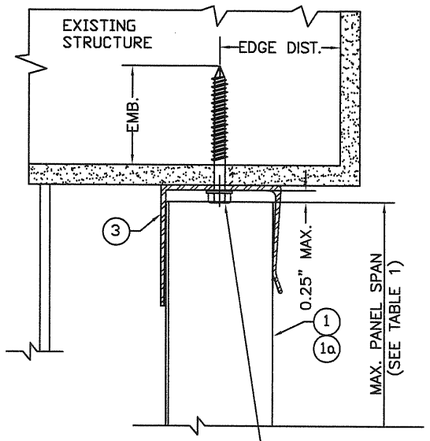

C2 CONNECTION TYPE
SELECT ANCHOR TYPE AND ANCHOR SPACING FROM ANCHOR SCHEDULE
ANCHOR SPACING NOT TO EXCEED 16' O.C.

(M) TRAP "U" HEADER SECTION

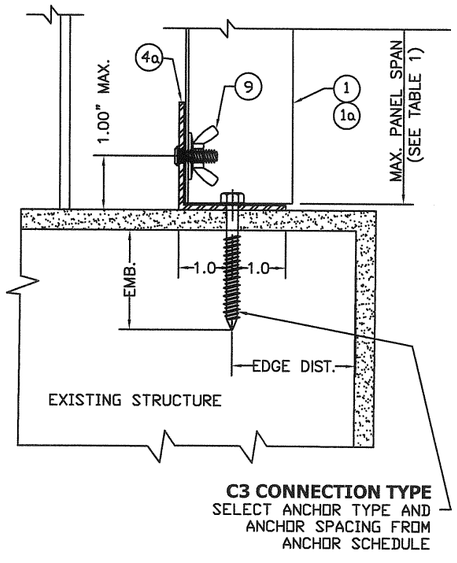

C3 CONNECTION TYPE
SELECT ANCHOR TYPE AND ANCHOR SPACING FROM ANCHOR SCHEDULE

(N) TRAP STUD ANGLE SECTION

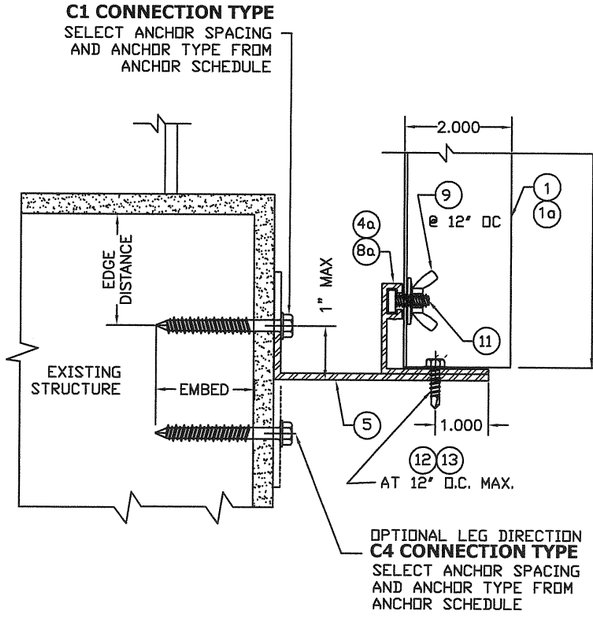

(P) REVERSE "F" ANGLE TRACK MOUNT SECTION

AUXILLIARY VIEW

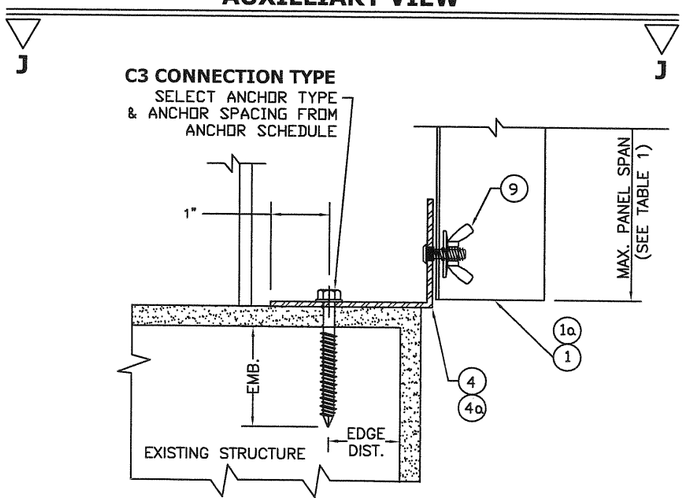

(L) REVERSE STUD ANGLE FLUSH MOUNT SECTION (SIDE VIEW)

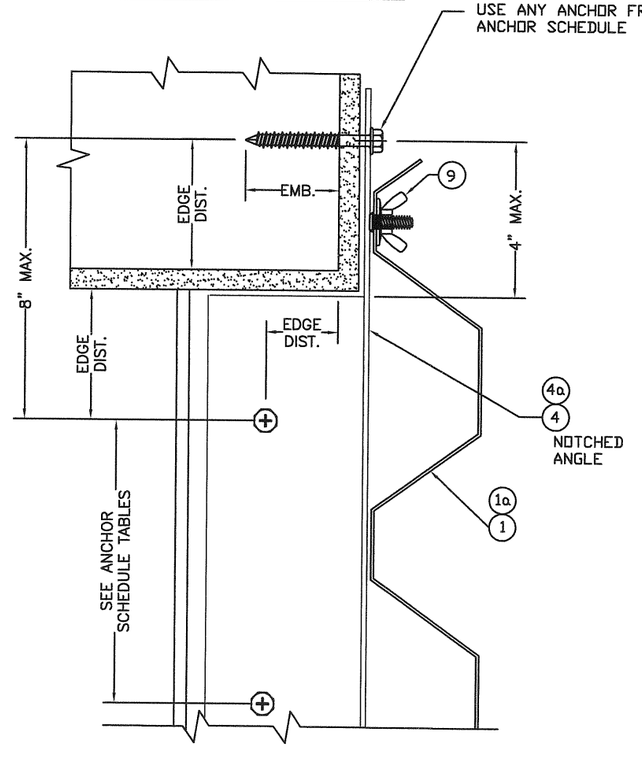

AUXILLIARY VIEW JJ (TOP VIEW) REVERSE STUD ANGLE FLUSH MOUNT SECTION

Documents Prepared By:
R.W. BUILDING CONSULTANTS, INC.
P.O. BOX 230, Largo, FL. 33595
Phone: 813-855-9197

ALLEN D. GEZELMAN
ALLEN GEZELMAN P.E. TEXAS P.E. #101678
LICENSED PROFESSIONAL ENGINEER

PRODUCT: STORM SHUTTERS
.050" ALUMINUM STORM PANEL
PART OR ASSEMBLY:
TYPICAL ELEVATIONS AND GENERAL NOTES

NO.	DATE	REVISIONS	BY
1	3/16/09	REVISED (TEXAS P.E.)	AL

DATE: 3/3/08
SCALE: N.T.S.
DWG. BY: AL
CHK. BY: LFS
DRAWING NO.: TX-4024
SHEET 6 OF 11

© 2009 R.W. BUILDING CONSULTANTS INC.

R:\A - Projects\Project Folders\Proj 1301-1400\PF 1358\D. RWBC Drawings\TX-4024\TX-4024.dwg, 1-6

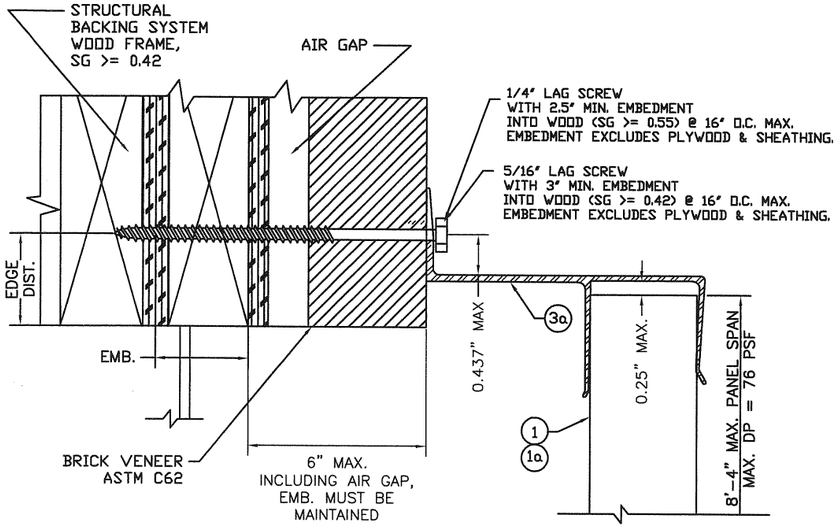

Q "U" HEADER BUILD-OUT THROUGH VENEER OVER STRUCTURAL BASE SECTION

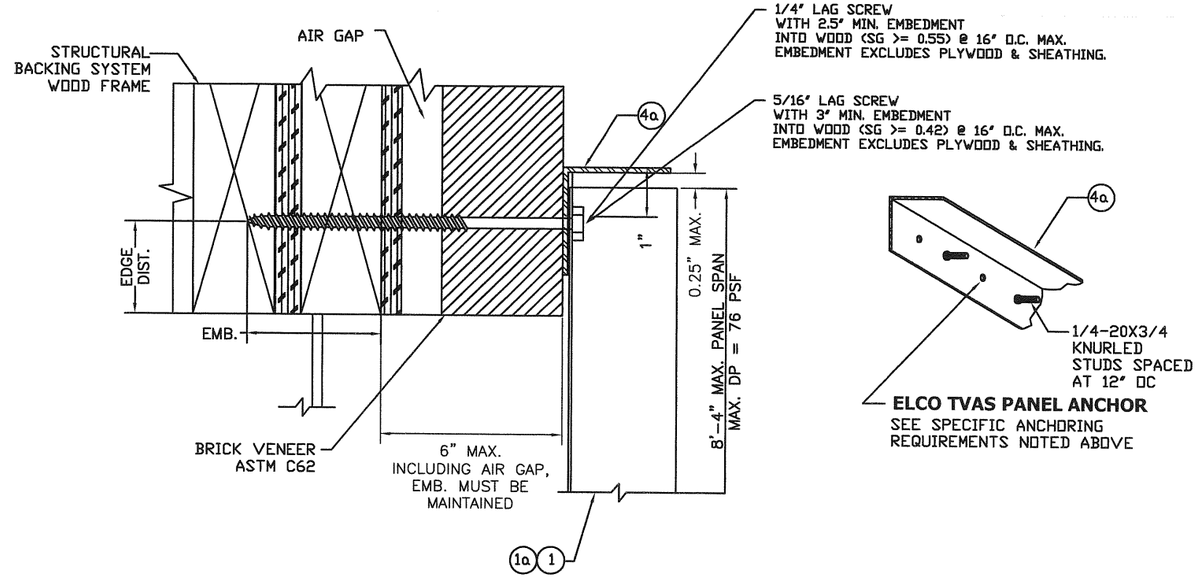

Qa STUD ANGLE THROUGH VENEER OVER STRUCTURAL BASE SECTION

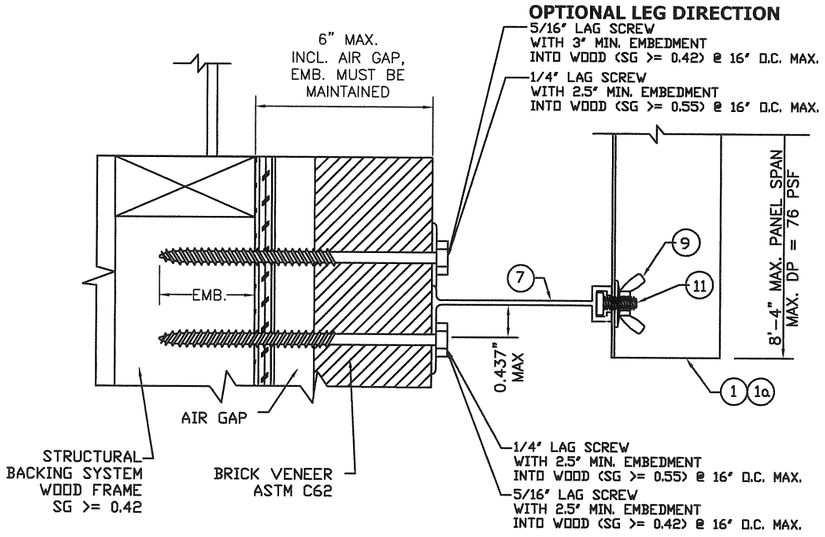

R BUILD-OUT "F" TRACK THROUGH VENEER OVER STRUCTURAL BASE SECTION

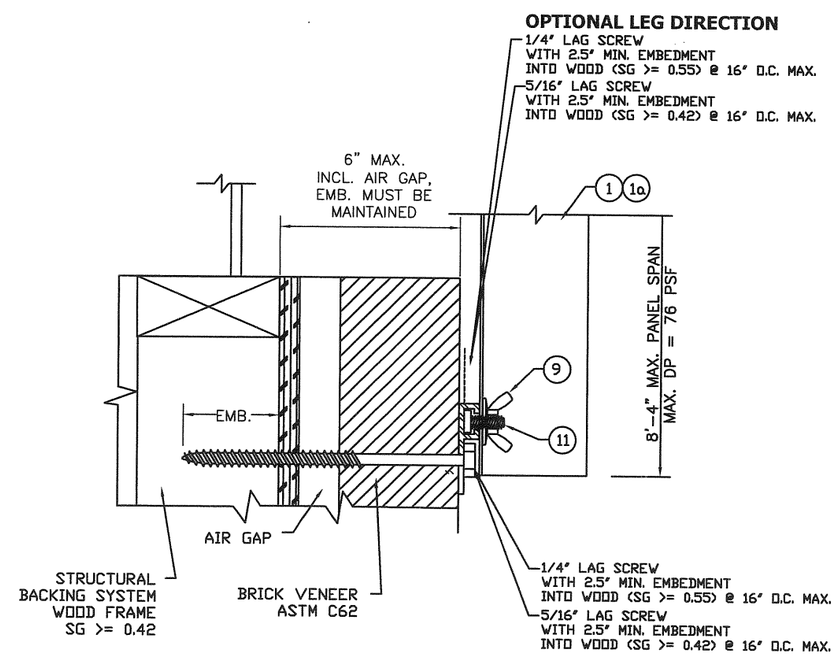

Ra DIRECT MOUNT THROUGH VENEER OVER STRUCTURAL BASE SECTION

Documents Prepared By:
Roger Wood & Co. Inc.
BUILDING CONSULTANTS, INC.
P.O. Box 230 Valrico FL. 33595
Phone No. 813.659.9187
ALLEN D. GEZELMAN
101678
LICENSED PROFESSIONAL ENGINEER
ALLEN GEZELMAN, P.E. TEXAS P.E. #101678

PRODUCT: STORM SHUTTERS .050" ALUMINUM STORM PANEL

PART OR ASSEMBLY: TYPICAL ELEVATIONS AND GENERAL NOTES

NO.	DATE	REVISIONS	BY
1	3/16/09	REVISED (TEXAS P.E.)	AL

DATE: 3/3/08
SCALE: N.T.S.
DWG. BY: AL
CHK. BY: LFS
DRAWING NO.: TX-4024
SHEET 7 OF 11

© 2009 R.W. BUILDING CONSULTANTS INC.

R:\A - Projects\Project Folders\Proj 1301-1400\PF 1358\D. RWBC Drawings\TX-4024\TX-4024.dwg, 1-7

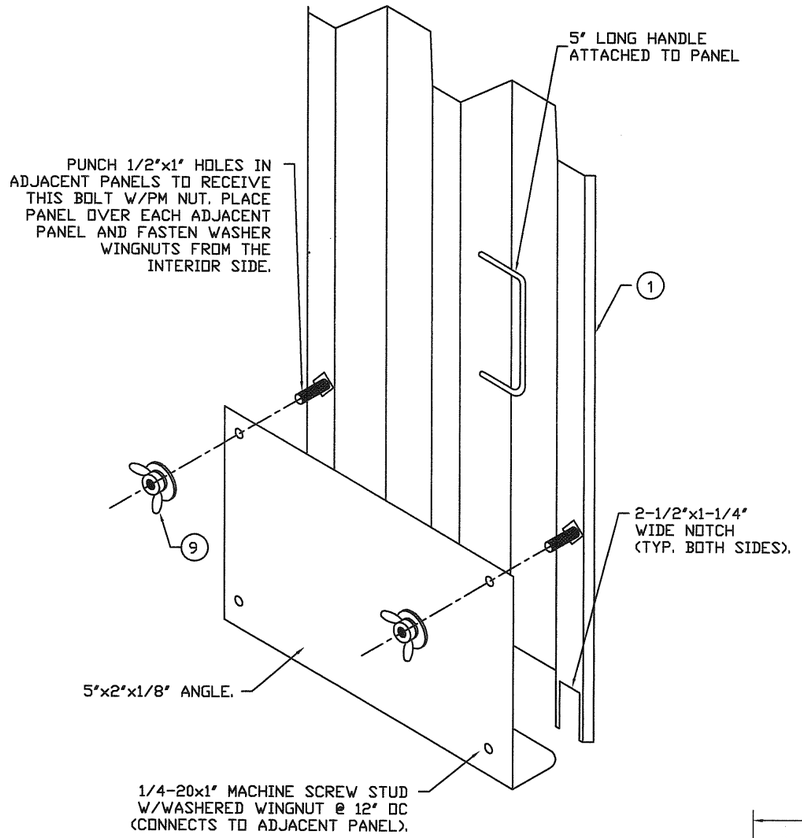

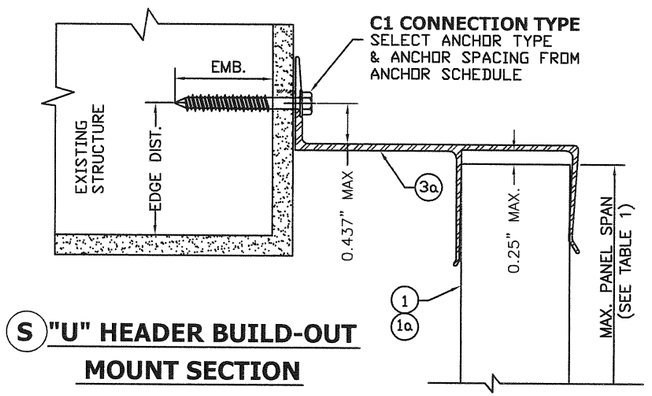

S "U" HEADER BUILD-OUT MOUNT SECTION

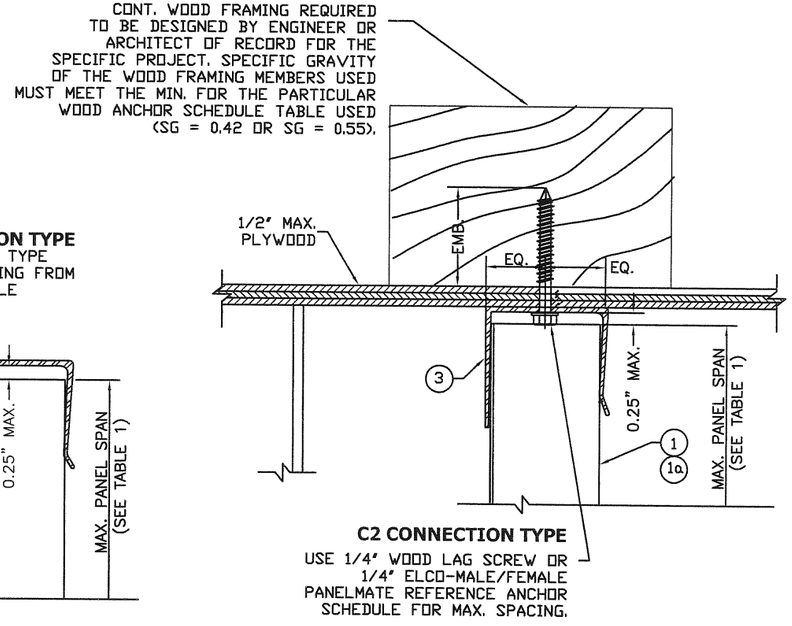

T CEILING "U" HEADER MOUNT SECTION

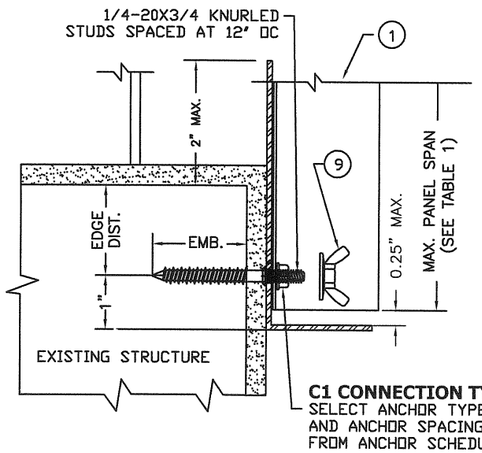

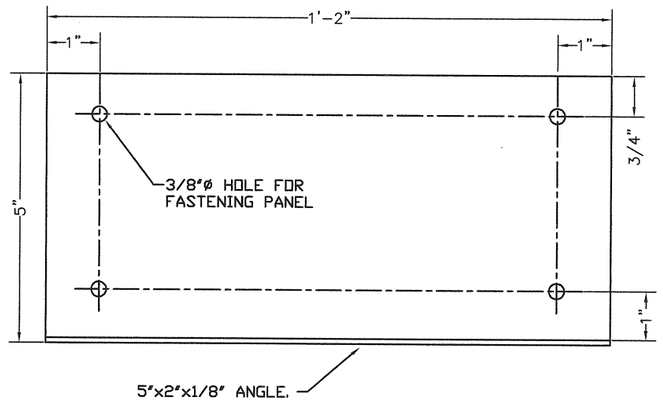

INTERIOR FASTENING ANGLE ASSEMBLY

THESE DETAILS DEPICT THE CONNECTION OF ANY PANEL FOR AN OPENING WITH PANELS INSTALLED FROM INSIDE. USE OF THESE DETAILS SHALL BE IN CONJUNCTION WITH AN "H" HEADER OR "U" HEADER TOP MOUNT. REMOVEABLE PANELS MAY BE MORE THAN ONE PANEL WIDE IN AN OPENING.

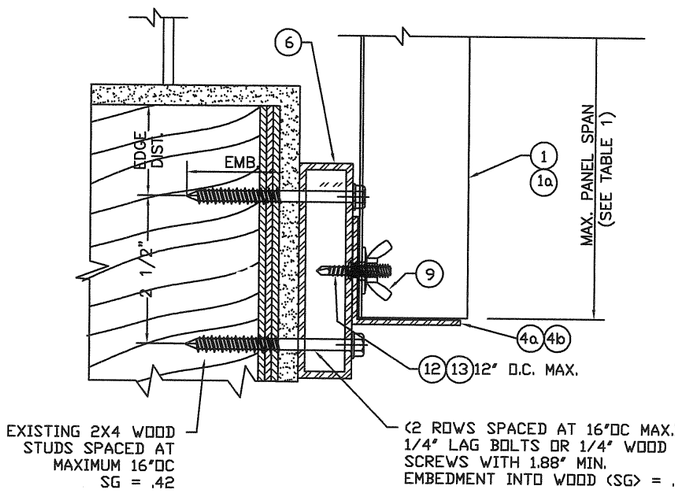

U STUD ANGLE BUILD-OUT MOUNT SECTION INTO STUD WALL

Documents Prepared By:
R.W. BUILDING CONSULTANTS, INC.
P.O. Box 230 Valrico, FL. 33595
Phone No.: 813.655.9197
ALLEN GEZELMAN, P.E. TEXAS P.E. #101678

PRODUCT: STORM SHUTTERS .050" ALUMINUM STORM PANEL
PART OR ASSEMBLY: TYPICAL ELEVATIONS AND GENERAL NOTES

NO.	DATE	REVISIONS	BY
1	3/16/09	REVISED (TEXAS P.E.)	AL

DATE: 3/3/08
SCALE: N.T.S.
DWG. BY: AL
CHK. BY: LFS
DRAWING NO.: TX-4024
SHEET 8 OF 11

© 2009 R.W. BUILDING CONSULTANTS INC.

R:\A - Projects\Project Folders\Proj 1301-1400\PF 1358\D. RWBC Drawings\TX-4024\TX-4024.dwg, 1-8

ANCHOR SCHEDULE

FASTENER MAX. SPACING (IN.) REQ'D FOR VARIOUS DESIGN LOADS AND SPANS

EXISTING STRUCTURE	ANCHOR TYPE	SHORTER EDGE DISTANCES: EDGE DISTANCE	LOAD PSF MAX. (SEE NOTE 1)	SPANS UP TO 60" (SEE NOTE 1) CONNECTION TYPE C1	C2	C3	C4	C5	SPANS UP TO 108" (SEE NOTE 1) CONNECTION TYPE C1	C2	C3	C4	C5	SPANS UP TO 144" (SEE NOTE 1) CONNECTION TYPE C1	C2	C3	C4	C5
CONCRETE	1/4"Ø ITW TAPCON (HEAD SHAPES MAY VARY) EM = 1.75" CL = 3.0" Fc = 3192 PSI	ED = 2.0"	33	16	16	16	16	16	16	16	13	13	16	15	15	10	9	16
			48	16	16	16	16	16	16	12	9	8	16	10	10	7	6	16
			62	16	15	13	12	16	12	9	7	6	16	8	8	5	5	16
			76	16	12	10	10	16	10	8	6	5	16	6	6	4	4	14
			90	16	10	9	8	16	8	6	5	4	16	5	5	3	3	12
			105	15	9	7	7	16	7	5	4	4	14	4	4	3	3	10
			120	13	8	6	6	16	6	5	3	3	12	4	4			9
	1/4"Ø ELCO TAPCON (HEAD SHAPES MAY VARY) EM = 1.75" CL = 4.0" Fc = 2700 PSI	ED = 2.0"	33	16	16	16	16	16	16	16	14	11	16	13	16	10	8	16
			48	16	16	16	13	16	14	14	9	7	16	9	13	7	5	16
			62	16	16	13	10	16	11	11	7	5	16	7	10	5	4	15
			76	16	14	11	8	16	8	9	6	4	16	5	8	4		12
			90	15	11	9	7	16	7	7	5	4	13	4	6			10
			105	13	10	8	6	16	6	6	4		11	4	5			8
			120	11	8	7	5	16	5	5			10		5			7
	1/4"Ø ELCO MALE/ FEMALE "PANELMATE" EM = 1.75" CL = 3.0" Fc = 3350 PSI	ED = 2.0"	33	16	16	16	16	16	16	16	16	14	16	16	16	13	10	16
			48	16	16	16	16	16	16	16	12	9	16	11	15	9	7	16
			62	16	16	16	13	16	14	13	9	7	16	9	12	7	5	16
			76	16	16	14	11	16	11	11	7	6	16	7	9	5	4	15
			90	16	14	11	9	16	9	9	6	5	16	6	8	4	3	13
			105	16	12	10	8	16	8	8	5	4	15	5	7	4	3	11
			120	15	10	8	7	16	7	7	4	3	13	4	6	3		10
	1/4"Ø ITW "SAMMYS SSC" EM = 1.25" CL = 3.0" Fc = 3295 PSI	ED = 2.0"	33	16	16	16	16	16	16	16	16	16	16	16	16	13	12	16
			48	16	16	16	16	16	16	16	12	11	16	13	14	9	8	16
			62	16	16	16	16	16	16	13	9	8	16	10	11	7	6	16
			76	16	16	14	13	16	13	10	7	7	16	8	9	5	5	16
			90	16	14	12	11	16	11	9	6	6	16	7	7	5	4	15
			105	16	12	10	9	16	9	7	5	5	16	6	6	4	3	13
			120	16	10	9	8	16	8	6	5	4	15	5	5	3	3	11
	5/16"Ø ITW TAPCON XL (HEAD SHAPES MAY VARY) EM = 1.75" CL = 5.0" Fc = 3362 PSI	ED = 2.0"	33	16	16	16	16	16	16	16	16	16	16	16	16	16	13	16
			48	16	16	16	16	16	16	16	15	11	16	14	16	11	8	16
			62	16	16	16	16	16	16	16	12	9	16	10	16	9	6	16
			76	16	16	16	13	16	14	14	10	7	16	8	13	7	5	16
			90	16	16	15	11	16	11	12	8	6	16	7	11	6		16
			105	16	16	13	9	16	10	10	7	5	16	6	9	5		14
			120	16	14	11	8	16	8	9	6		16	5	8			12
	ALL POINTS 1/4"Ø SOLID SET EM = 0.875" CL = 3" Fc = 3000 PSI	ED = 1.25"	33	16	16	15	13	16	14	16	8	7	16	9	16	6	5	16
			48	16	16	10	9	16	9	15	5	5	16	6	14	4	3	13
			62	15	16	8	7	16	7	11	4	4	14	4	11	3	3	10
			76	12	14	6	6	16	6	9	3	3	11	3	9			8
			90	10	12	5	5	16	5	8	3		9	3	7			7
			105	9	10	4	4	14	4	6			8		6			6
			120	8	9	4	3	13	3	6			7		5			5

EXISTING STRUCTURE	ANCHOR TYPE	LONGER EDGE DISTANCES: EDGE DISTANCE	SPANS UP TO 60" (SEE NOTE 1) CONNECTION TYPE C1	C2	C3	C4	C5	SPANS UP TO 108" (SEE NOTE 1) CONNECTION TYPE C1	C2	C3	C4	C5	SPANS UP TO 144" (SEE NOTE 1) CONNECTION TYPE C1	C2	C3	C4	C5
CONCRETE	1/4"Ø ITW TAPCON (HEAD SHAPES MAY VARY) EM = 1.75" CL = 3.0" Fc = 3192 PSI	ED = 2.5"	16	16	16	16	16	16	16	16	13	16	16	16	12	10	16
			16	16	16	16	16	16	15	11	9	16	11	13	8	7	16
			16	16	15	13	16	13	12	8	7	16	8	10	6	5	16
			16	15	12	10	16	10	9	7	5	16	7	8	5	4	15
			16	13	10	8	16	9	8	5	4	16	5	7	4	3	12
			16	11	9	7	16	7	7	5	4	14	5	6	3	3	10
			14	9	8	6	16	6	6	4	3	12	4	5	3		9
	1/4"Ø ELCO TAPCON (HEAD SHAPES MAY VARY) EM = 1.75" CL = 4.0" Fc = 2700 PSI	ED = 2.5"	16	16	16	16	16	16	16	15	11	16	13	16	11	8	16
			16	16	16	13	16	14	16	10	7	16	9	15	8	5	16
			16	16	15	10	16	11	12	8	5	16	7	11	6	4	15
			16	15	12	8	16	9	10	6	4	16	5	9	5		12
			15	13	10	7	16	7	8	5	4	14	4	8	4		10
			13	11	8	6	16	6	7	4		12	4	6			9
			11	9	7	5	16	5	6	4		10		6			7
	1/4"Ø ELCO MALE/ FEMALE "PANELMATE" EM = 1.75" CL = 3.0" Fc = 3350 PSI	ED = 2.5"	16	16	16	16	16	16	16	16	14	16	16	16	15	10	16
			16	16	16	16	16	16	16	14	9	16	11	16	10	7	16
			16	16	16	13	16	14	16	10	7	16	9	15	8	5	16
			16	16	15	11	16	11	13	8	6	16	7	12	6	4	16
			16	16	13	9	16	9	11	7	5	16	6	10	5	3	13
			16	14	11	8	16	8	9	6	4	15	5	8	4	3	11
			15	12	10	7	16	7	8	5	3	13	4	7	4		10
	1/4"Ø ITW "SAMMYS SSC" EM = 1.25" CL = 3.0" Fc = 3295 PSI	ED = 2.5"	16	16	16	16	16	16	16	16	16	16	16	16	14	12	16
			16	16	16	16	16	16	16	13	11	16	13	15	9	8	16
			16	16	16	16	16	16	13	10	9	16	10	11	7	6	16
			16	16	14	13	16	13	11	8	7	16	8	9	6	5	16
			16	14	12	11	16	11	9	6	6	16	7	8	5	4	16
			16	12	10	9	16	9	8	5	5	16	6	7	4	4	13
			16	11	9	8	16	8	7	5	4	16	5	6	3	3	12
	5/16"Ø ITW TAPCON XL (HEAD SHAPES MAY VARY) EM = 1.75" CL = 5.0" Fc = 3362 PSI	ED = 3.0"	16	16	16	16	16	16	16	16	16	16	16	16	16	14	16
			16	16	16	16	16	16	16	16	13	16	15	16	14	9	16
			16	16	16	16	16	16	16	14	10	16	12	16	11	7	16
			16	16	16	15	16	15	16	11	8	16	9	16	8	6	16
			16	16	16	12	16	13	15	10	7	16	8	14	7	5	16
			16	16	15	10	16	11	13	8	6	16	7	12	6		15
			16	16	13	9	16	9	11	7	5	16	6	10	5		13
	ALL POINTS 1/4"Ø SOLID SET EM = 0.875" CL = 3" Fc = 3000 PSI	ED = 2.0"	16	16	16	16	16	16	16	14	9	16	11	16	10	7	16
			16	16	16	12	16	12	15	9	6	16	8	14	7	5	16
			16	16	13	9	16	9	11	7	5	16	6	11	5	3	13
			16	14	11	7	16	8	9	6	4	14	5	9	4	3	11
			13	12	9	6	16	6	8	5	3	12	4	7	3		9
			11	10	8	5	16	5	6	4	3	10	3	6	3		8
			10	9	7	4	16	5	6	3		9	3	5			7

EM = MINIMUM EMBEDMENT (PENETRATION)
CL = MINIMUM CENTER TO CENTER ANCHOR SPACING

MASONRY ANCHOR SCHEDULE NOTES

1. SPANS AND LOADS SHOWN HERE ARE FOR DETERMINING ANCHOR SPACING ONLY. ALLOWABLE STORM PANEL SPANS FOR SPECIFIC LOADS MUST BE LIMITED TO THOSE SHOWN IN TABLE 1.

2. SEE MOUNTING SECTION DETAILS FOR IDENTIFICATION OF CONNECTION TYPE.

3. TO USE THE ANCHOR SCHEDULE, FIRST DETERMINE THE DESIGN PRESSURE, SPAN AND CONNECTION TYPE FOR THE SPECIFIC OPENING BEING PROTECTED. ENTER ANCHOR SCHEDULE AT A LOAD EQUAL TO OR GREATER THAN THE REQUIREMENT AND A SPAN EQUAL TO OR GREATER THAN THE REQUIRMENT; USE THE ANCHOR SPACING LISTED FOR THE SPECIFIC CONNECTION TYPE AND ANCHOR SELECTED.

4. LINEAR INTERPOLATION IS ALLOWED FOR INTERMEDIATE SPANS AND LOADS.

5. EXISTING STRUCTURE MAY BE CONCRETE, HOLLOW BLOCK OR WOOD FRAMING. REFER TO ANCHOR SCHEDULE FOR PROPER ANCHOR TYPE BASED ON TYPE OF EXISTING STRUCTURE.

6. ANCHORS SHALL BE INSTALLED IN ACCORDANCE WITH THE ANCHOR MANUFACTURER'S RECOMMENDATIONS.

7. MINIMUM EMBEDMENT AND EDGE DISTANCE EXCLUDES WALL FINISH OR STUCCO.

8. WASHERED WINGNUTS AND NUTS SHALL BE INSTALLED SUCH THAT THE NUT IS FLUSH WITH THE THREADED STUD OR BOLT, MINIMUM. MACHINE SCREWS SHALL HAVE MINIMUM OF 1/2" ENGAGEMENT OF THREADS IN BASE ANCHOR AND MAY HAVE EITHER A PAN HEAD, TRUSS HEAD, HEX HEAD OR WAFER HEAD (SIDEWALK BOLT), U.O.N.

9. ▨ DESIGNATES ANCHOR CONDITIONS WHICH ARE NOT ACCEPTABLE USES.

10. ✹ DESIGNATES REMOVEABLE FASTENERS.

11. 1/4-20 TRUSS HEAD BOLTS MAY BE USED IN LIEU OF 1/4-20 SIDEWALK BOLT IF KEYHOLE WASHERS ARE USED.

Documents Prepared By:
R.W. BUILDING CONSULTANTS, INC.
P.O. Box 230 Valrico FL. 33595
Phone No. 813.659.9197

ALLEN GEZELMAN, P.E. #101678
STATE OF TEXAS

PRODUCT: STORM SHUTTERS .050" ALUMINUM STORM PANEL
PART OR ASSEMBLY: ANCHOR SCHEDULE

NO.	DATE	REVISIONS	BY
1	3/16/09	REVISED (TEXAS P.E.)	AL

DATE: 3/3/08
SCALE: N.T.S.
DWG. BY: AL
CHK. BY: LFS
DRAWING NO.: TX-4024
SHEET 9 OF 11

© 2009 R.W. BUILDING CONSULTANTS INC.

R:\A - Projects\Project Folders\Proj 1301-1400\PF 1358\D. RWBC Drawings\TX-4024\TX-4024.dwg, 1-9

ANCHOR SCHEDULE

FASTENER MAX. SPACING (IN.) REQ'D FOR VARIOUS DESIGN LOADS AND SPANS

EXISTING STRUCTURE: HOLLOW CONCRETE BLOCK

SHORTER EDGE DISTANCES

ANCHOR TYPE	EDGE DISTANCE	LOAD PSF MAX. (SEE NOTE 1)	SPANS UP TO 60" (SEE NOTE 1) CONNECTION TYPE					SPANS UP TO 108" (SEE NOTE 1) CONNECTION TYPE					SPANS UP TO 144" (SEE NOTE 1) CONNECTION TYPE				
			C1	C2	C3	C4	C5	C1	C2	C3	C4	C5	C1	C2	C3	C4	C5
1/4"Ø ITW TAPCON (HEAD SHAPES MAY VARY) EM = 1.75" CL = 3.0" Fc = 3192 PSI	ED = 2.0"	33	15	14	11	7	16	7	10	6	3	13	4	9	4		10
		48	10	10	7	4	16	5	6	4		9	3	6	3		7
		62	8	7	6	3	13	3	5	3		7		5			5
		76	6	6	4	3	10	3	4			5		4			4
		90	5	5	4		9		3			5		3			3
		105	4	4	3		7		3			4		3			3
		120	4	4	3		6					3					
1/4"Ø ELCO TAPCON (HEAD SHAPES MAY VARY) EM = 1.75" CL = 4.0" Fc = 2700 PSI	ED = 2.5"	33	15	16	13	7	16	7	13	7	4	14	4	15	5		10
		48	10	14	9	5	16	5	10	5		9		11	4		7
		62	8	13	7		13	4	9	4		7		10			5
		76	6	9	6		11		7			6		7			4
		90	5	7	5		9		5			5		6			
		105	4	6	4		8		4			4		4			
		120	4	5			7							4			
1/4"Ø ELCO MALE/ FEMALE "PANELMATE" EM = 1.75" CL = 3.0" Fc = 3350 PSI	ED = 2.0"	33	16	16	16	11	16	11	13	6	6	16	7	13	6	4	15
		48	16	15	11	7	16	7	10	4	4	14	5	9	4	3	10
		62	12	14	8	5	16	6	9	3	3	11	3	9	3		8
		76	10	10	7	4	16	5	7			9	3	6			6
		90	8	8	5	4	13	4	5			7		5			5
		105	7	6	5	3	11	3	4			6		4			4
		120	6	5	4	3	10	3	3			5		3			4
1/4"Ø ITW "SAMMYS SSC" EM = 1.25" CL = 3.0" Fc = 3295 PSI	ED = 2.0"	33	16			15	16	15			8	16	9			6	16
		48	16			10	16	10			5	16	6			4	14
		62	16			8	16	8			4	15	5			3	11
		76	13			6	16	6			3	12	4				9
		90	11			5	16	5			3	10	3				7
		105	10			4	16	4				8	3				6
		120	8			4	14	4				7					5
ALL POINTS 1/4"Ø SOLID SET EM = 0.875" CL = 3" Fc = 3000 PSI	ED = 1.25"	33	16	13	11	9	16	9	8	6	5	16	5	8	4	3	12
		48	13	10	7	6	16	6	6	4	3	11	4	6	3		8
		62	10	9	6	4	16	4	6	3		9	3	5			6
		76	8	7	4	3	13	4	4			7		4			5
		90	7	5	4	3	11	3	3			6		3			4
		105	6	4	3		9					5					4
		120	5	3	3		8					4					3

LONGER EDGE DISTANCES

EDGE DISTANCE	SPANS UP TO 60" (SEE NOTE 1) CONNECTION TYPE					SPANS UP TO 108" (SEE NOTE 1) CONNECTION TYPE					SPANS UP TO 144" (SEE NOTE 1) CONNECTION TYPE				
	C1	C2	C3	C4	C5	C1	C2	C3	C4	C5	C1	C2	C3	C4	C5
ED = 2.5"	16	16	13	8	16	8	12	7	4	15	5	12	5	3	11
	12	12	9	5	16	5	8	5	3	10	3	8	3		8
	9	9	7	4	15	4	6	4		8		6	3		6
	7	7	5	3	12	3	5	3		6		5			5
	6	6	4	3	10	3	4			5		4			4
	5	5	4		8		3			4		3			3
	4	4	3		7		3			4		3			3
ED = 4.0"	16	16	16	9	16	9	16	9	5	16	6	16	6		13
	13	16	11	6	16	6	12	6		12	4	12	4		9
	10	15	8	4	16	5	11	4		9		11			7
	8	11	7	4	13	4	8	4		7		8			5
	7	9	6		11		6			6		6			4
	6	7	5		9		5			5		5			4
	5	6	4		8		4			4		4			
ED = 2.5"	16	16	16	11	16	11	15	7	6	16	7	15	7	4	15
	16	16	12	7	16	7	11	5	4	14	5	11	5	3	10
	12	16	9	5	16	6	10	3	3	11	3	10	3		8
	10	11	7	4	16	5	8	3		9	3	7	3		6
	8	9	6	4	13	4	6			7		6			5
	7	7	5	3	11	3	4			6		4			4
	6	6	4	3	10	3	4			5		4			4
ED = 2.5"	16			15	16	15			8	16	10			6	16
	16			10	16	10			5	16	6			4	14
	16			8	16	8			4	15	5			3	11
	13			6	16	6			3	12	4				9
	11			5	16	5			3	10	3				7
	10			4	16	4				9	3				6
	8			4	14	4				7					5
ED = 2.0"	16	16	16	15	16	15	14	10	8	16	10	12	7	6	16
	16	16	12	10	16	10	10	7	5	16	7	9	5	4	15
	16	15	9	8	16	8	10	5	4	15	5	9	4	3	11
	14	11	8	6	16	6	7	4	3	12	4	6	3		9
	12	9	6	5	16	5	6	3	3	10	3	5			8
	10	7	5	4	16	5	4	3		9	3	4			6
	9	6	5	4	14	4	4			8		3			6

Documents Prepared By:
R.W. BUILDING CONSULTANTS, INC.
P.O. Box 630 Venice FL. 33595
Phone No. 813.659.9197

PRODUCT: STORM SHUTTERS .050" ALUMINUM STORM PANEL

PART OR ASSEMBLY: ANCHOR SCHEDULE

NO.	DATE	REVISIONS	BY
1	3/16/09	REVISED (TEXAS P.E.)	AL

DATE: 3/3/08
SCALE: N.T.S.
DWG. BY: AL
CHK. BY: LFS
DRAWING NO.: TX-4024
SHEET 10 OF 11

ALLEN GEZEMAN
STATE OF FLORIDA
ALLEN GEZEMAN, P.E. #101678

3/16/09

© 2009 R.W. BUILDING CONSULTANTS INC.

R:\A - Projects\Project Folders\Proj 1301-1400\PF 1358\D. RWBC Drawings\TX-4024\TX-4024.dwg, 1-10

ANCHOR SCHEDULE

FASTENER MAX. SPACING (IN.) REQ'D FOR VARIOUS DESIGN LOADS AND SPANS

EXISTING STRUCTURE	ANCHOR TYPE	LOAD PSF MAX. (SEE NOTE 1)	SPANS UP TO 60" (SEE NOTE 1) CONNECTION TYPE					SPANS UP TO 108" (SEE NOTE 1) CONNECTION TYPE					SPANS UP TO 144" (SEE NOTE 1) CONNECTION TYPE				
			C1	C2	C3	C4	C5	C1	C2	C3	C4	C5	C1	C2	C3	C4	C5
WOOD (SG >= 0.55) (SOUTHERN YELLOW PINE)	1/4"Ø ELCO MALE/ FEMALE "PANELMATE" EM = 1.875" CL = 3.0"	33	16	16	16	16	16	16	16	14	15	16	16	15	10	11	16
		48	16	16	16	16	16	16	12	10	10	16	12	10	7	8	16
		62	16	16	14	14	16	15	10	7	8	16	9	8	5	6	16
		76	16	13	11	12	16	12	8	6	6	16	8	6	4	5	16
		90	16	11	9	10	16	10	6	5	5	16	6	5	4	4	14
		105	16	9	8	8	16	9	5	4	4	16	5	4	3	3	12
		120	16	8	7	7	16	7	5	4	4	14	5	4	3	3	10
	1/4"Ø LAG SCREW EM = 1.88" CL = 2.0"	33	16	16	16	16	16	16	10	9	14	16	16	8	6	11	16
		48	16	12	11	16	16	16	7	6	10	16	11	5	4	7	16
		62	16	9	8	14	16	14	5	4	7	16	9	4	3	5	16
		76	16	7	7	11	16	11	4	3	6	16	7	3	2	4	16
		90	16	6	5	9	16	10	3	3	5	16	6	3	2	4	13
		105	16	5	5	8	16	8	3	2	4	15	5	2	2	3	11
		120	15	4	4	7	16	7	2	2	4	13	4	2		3	10
	1/4"Ø WOOD SCREW EM = 1.88" CL = 2.0"	33	16	16	14	16	16	16	9	7	9	16	10	8	5	6	16
		48	16	11	9	11	16	11	6	5	6	16	7	5	4	4	16
		62	16	8	7	8	16	9	5	4	4	16	5	4	3	3	12
		76	15	7	6	7	16	7	4	3	4	13	4	3	2	3	10
		90	12	5	5	6	16	6	3	2	3	11	4	3	2	2	8
		105	11	5	4	5	16	5	3	2	2	9	3	2		2	7
		120	9	4	3	4	15	4	2	2	2	8	3	2			6
	1/4"Ø SMS EM = 1.88" CL = 2.0"	33	16	16	14	16	16	16	9	7	9	16	10	8	5	6	16
		48	16	11	9	11	16	11	6	5	6	16	7	5	4	4	16
		62	16	8	7	8	16	9	5	4	4	16	5	4	3	3	12
		76	15	7	6	7	16	7	4	3	4	13	4	3	2	3	10
		90	12	5	5	6	16	6	3	2	3	11	4	3	2	2	8
		105	11	5	4	5	16	5	3	2	2	9	3	2		2	7
		120	9	4	3	4	15	4	2	2	2	8	3	2			6

EM = MINIMUM EMBEDMENT (PENETRATION)
CL = MINIMUM CENTER TO CENTER ANCHOR SPACING

ANCHOR SCHEDULE

FASTENER MAX. SPACING (IN.) REQ'D FOR VARIOUS DESIGN LOADS AND SPANS

EXISTING STRUCTURE	ANCHOR TYPE	LOAD PSF MAX. (SEE NOTE 1)	SPANS UP TO 60" (SEE NOTE 1) CONNECTION TYPE					SPANS UP TO 108" (SEE NOTE 1) CONNECTION TYPE					SPANS UP TO 144" (SEE NOTE 1) CONNECTION TYPE				
			C1	C2	C3	C4	C5	C1	C2	C3	C4	C5	C1	C2	C3	C4	C5
WOOD (SG >= 0.42) (SPRUCE-PINE-FIR)	1/4"Ø LAG SCREW EM = 1.88" CL = 2.0"	33	16	16	16	16	16	16	11	9	9	16	11	9	6	7	16
		48	16	13	11	12	16	12	8	6	6	16	7	6	4	5	16
		62	16	10	8	9	16	9	6	4	5	16	6	5	3	3	13
		76	16	8	7	7	16	7	5	3	4	14	5	4		3	10
		90	13	7	6	6	16	6	4	3	3	12	4	3			9
		105	11	6	5	5	16	5	3		3	10	3	3			7
		120	10	5	4	4	16	5	3			9	3				6
	1/4"Ø WOOD SCREW EM = 1.88" CL = 2.0"	33	16	16	13	9	16	10	11	7	5	16	6	10	5	4	13
		48	14	11	9	6	16	6	7	5	3	12	4	7	3	2	9
		62	10	9	7	5	16	5	5	4	2	9	3	5	3	2	7
		76	8	7	5	4	14	4	4	3	2	8	2	4	2		6
		90	7	6	4	3	12	3	4	2		6	2	3	2		5
		105	6	5	4	3	10	3	3	2		5	2	3			4
		120	5	4	3	2	9	2	3	2		5		2			3
	1/4"Ø SMS EM = 1.88" CL = 2.0"	33	16	16	13	9	16	10	11	7	5	16	6	10	5	4	13
		48	14	11	9	6	16	6	7	5	3	12	4	7	3	2	9
		62	10	9	7	5	16	5	5	4	2	9	3	5	3	2	7
		76	8	7	5	4	14	4	4	3	2	8	2	4	2		6
		90	7	6	4	3	12	3	4	2		6	2	3	2		5
		105	6	5	4	3	10	3	3	2		5	2	3			4
		120	5	4	3	2	9	2	3	2		5		2			3

EM = MINIMUM EMBEDMENT (PENETRATION)
CL = MINIMUM CENTER TO CENTER ANCHOR SPACING

ANCHORING NOTES FOR WOOD SUBSTRATES

1. FOR CONNECTION TYPES "C1" AND "C4", ANCHORS INSTALLED INTO THE 1.5" FACE OF 2X FRAMING SHALL BE IN THE CENTER OF THE 1.5" FACE (.75" EDGE DISTANCE). ANCHORS SHALL BE A MINIMUM OF 2" FROM ENDS OF 2X FRAMING.

2. FOR CONNECTION TYPES "C2" AND "C3", ANCHORS SHALL BE INSTALLED A MINIMUM OF 1" FROM THE LOADED EDGE OF 2X FRAMING AND A MINIMUM OF 2" FROM THE ENDS OF 2X FRAMING.

3. FIELD VERIFY THAT ANCHORS ARE INTO ADEQUATE STRUCTURAL WOOD FRAMING MEMBERS AND NOT INTO PLYWOOD, OSB OR OTHER SIMILAR MATERIALS.

4. FASTENER EMBEDMENT (PENETRATION) EXCLUDES SHEATHING, WALL COVERINGS AND SIMILAR WALL DRESSING MATERIAL.

5. SPECIFIC GRAVITY SG = 0.55 IS FOR SOUTHERN YELLOW PINE (SYP) AND SG = 0.42 IS FOR SPRUCE-PINE-FIR (SPF). FOR INTERMEDIATE VALUES OF SG, LINEAR INTERPOLATION CAN BE USED TO DETERMINE MAXIMUM SPACING OF ANCHORS INTO WOOD.

Documents Prepared By:
R.W. BUILDING CONSULTANTS, INC.
5 PEGO LANE, Palm Coast FL. 33595
Phone No.: 813.503.9197

ALLEN GLEICHMAN, P.E. TEXAS P.E. #101678
LICENSED PROFESSIONAL ENGINEER
3/3/09

PRODUCT:
STORM SHUTTERS
.050" ALUMINUM STORM PANEL

PART OR ASSEMBLY:
ANCHOR SCHEDULE

NO.	DATE	REVISIONS	BY
1	3/16/09	REVISED (TEXAS P.E.)	AL

DATE: 3/3/08
SCALE: N.T.S.
DWG. BY: AL
CHK. BY: LFS
DRAWING NO.: TX-4024
SHEET 11 OF 11

© 2009 R.W. BUILDING CONSULTANTS INC.

R:\A - Projects\Project Folders\Proj 1301-1400\PF 1358\D. RWBC Drawings\TX-4024\TX-4024.dwg, 1-11