GENERAL NOTES:

1. OPEN BACK 58mm SLAT END RETENTION BERTHA ROLL–UP SHUTTER SHOWN ON THIS PRODUCT EVALUATION DOCUMENT (P.E.D.) HAS BEEN VERIFIED FOR COMPLIANCE IN ACCORDANCE WITH THE 2006 EDITIONS OF THE INTERNATIONAL BUILDING CODE, (I.B.C.) AND INTERNATIONAL RESIDENTIAL CODE, (I.R.C.) WITH THE 2006 TEXAS REVISIONS, EFFECTIVE JANUARY 1, 2008.
   THIS ROLL–UP SHUTTER SHALL BE INSTALLED AT SEAWARD AND INLAND AREAS, AS DEFINED BY THE TEXAS DEPARTMENT OF INSURANCE.
   DESIGN WIND LOADS SHALL BE DETERMINED AS PER SECTION 1609 OF THE INTERNATIONAL BUILDING CODE FOR A BASIC WIND SPEED AS REQUIRED BY THE JURISDICTION WHERE SHUTTER WILL BE INSTALLED, AND FOR A DIRECTIONALITY FACTOR Kd=0.85, IN ACCORDANCE WITH ASCE 7–05 STANDARD.
   ROLL–UP SHUTTER'S ADEQUACY FOR IMPACT AND CYCLIC RESISTANCE HAS BEEN VERIFIED IN ACCORDANCE WITH SECTION 1609.1.2 OF THE INTERNATIONAL BUILDING CODE AS PER AMERICAN TESTING LAB OF SOUTH FLORIDA LAB. REPORTS # 1221.01–07 AND 0404.01–08 AS PER ASTM E 1886–05, E 1996–05 AND E 330–02 STANDARDS, QUALIFYING INSTALLATIONS FOR WIND ZONES 1, 2, 3 & 4, MISSILE TYPE D, APPLICABLE TO BASIC PROTECTION ONLY INSTALLATIONS, AS DEFINED BY SECTIONS 6.2.1.1, 6.2.1.2 AND 8.3 OF ASTM E 1996–05.

2. ALL ALUMINUM EXTRUSIONS SHALL BE ALUMINUM ASSOCIATION 6063–T6 ALLOY AND TEMPER UNLESS OTHERWISE NOTED. THE THICKNESS OF ALL EXTRUSIONS SHALL BE AS SHOWN ON THIS DRAWING.

3. EVERY OTHER SLAT SHALL INCLUDE SLAT LOCKS AT EACH END (SEE COMPONENTS SHEET).

4. ALL SCREWS (EXCEPT END RETENTION SCREW Ⓑ) & BOLTS INSTALLED AT SEAWARD AREAS TO BE STAINLESS STEEL 304 OR 316 AISI SERIES AND MEET ASTM A167, OR HOT DIPPED GALVANIZED (AFTER FABRICATION) CARBON STEEL AS PER ASTM A123 OR ASTM A153, OR HOT DIPPED GALVANIZED OR GALVANNEALED (PRIOR TO FABRICATION) AND MEET ASTM A653 WITH 50 ksi YIELD STRENGTH AND 90 ksi TENSILE STRENGTH, PER 2006 TEXAS REVISIONS TO SECTION 1716.1.1 OF THE 2006 I.B.C. AND SECTION R325.1.1 OF THE 2006 I.R.C.

5. ALL SCREWS (EXCEPT END RETENTION SCREW Ⓑ) & BOLTS INSTALLED AT INLAND I AREAS TO BE STAINLESS STEEL 304 OR 316 AISI SERIES AND MEET ASTM A167, OR HOT DIPPED GALVANIZED (AFTER FABRICATION) CARBON STEEL AS PER ASTM A123 OR ASTM A153, OR HOT DIPPED GALVANIZED OR GALVANNEALED (PRIOR TO FABRICATION) AND MEET ASTM A653; HOT DIP GALVANIZED OR ELECTRO GALVANIZED PER ASTM A641, MECHANICALLY DEPOSITED ZINC COATINGS PER ASTM B695 OR ELECTRO DEPOSITED ZINC COATINGS PER ASTM B633, PER THE 2006 TEXAS REVISIONS TO SECTION 1716.1.2 OF THE 2006 I.B.C. AND TO SECTION R325.1.2 OF THE 2006 I.R.C.

6. ANCHORS TO WALL FOR Ⓓ SIDE RAIL SHALL BE AS FOLLOWS:

(A) TO EXISTING POURED CONCRETE: MIN. f'c = 2899 p.s.i. COMPRESSIVE STRENGTH.

NOTES:
–5/16"ø CARBON STEEL TAPCON XL ANCHORS AS MANUFACTURED BY ITW BUILDEX, INC.

A.1) MINIMUM EMBEDMENT OF TAPCON XL ANCHORS INTO POURED CONCRETE SHALL BE 1 3/4".
NO EMBEDMENT INTO STUCCO SHALL BE CONSIDERED AS PART OF THE REQUIRED EMBEDMENT.

A.2) MINIMUM EDGE DISTANCE OF TAPCON XL ANCHORS INTO POURED CONCRETE SHALL BE 4".

A.3) IN CASE THAT PRECAST STONE, PRECAST CONCRETE OR BRICK PANELS, VENEER OR PAVERS BE FOUND ON THE EXISTING WALL, ANCHORS SHALL BE LONG ENOUGH TO REACH THE MAIN SUBSTRATE BEHIND SUCH PANELS. MINIMUM EMBEDMENT SHALL BE AS INDICATED ON NOTE A.1 ABOVE.

(B) TO EXISTING GROUT FILLED CELL ASTM C–90 CONCRETE BLOCK WALL:

NOTES:
–5/16"ø CARBON STEEL TAPCON XL ANCHORS, AS MANUFACTURED BY ITW BUILDEX, INC.

B.1) MINIMUM EMBEDMENT OF TAPCON XL ANCHORS, INTO THE GROUT FILLED CELL CONCRETE BLOCK UNIT SHALL BE 2 1/4".
NO EMBEDMENT INTO STUCCO SHALL BE CONSIDERED AS PART OF THE REQUIRED EMBEDMENT.

B.2) MINIMUM EDGE DISTANCE OF TAPCON XL ANCHORS INTO GROUT FILLED CELL CONCRETE BLOCK SHALL BE 4".

B.3) IN CASE THAT PRECAST STONE, PRECAST CONCRETE OR BRICK PANELS, VENEER OR PAVERS BE FOUND ON THE EXISTING WALL, ANCHORS SHALL BE LONG ENOUGH TO REACH THE MAIN SUBSTRATE BEHIND SUCH PANELS. MINIMUM EMBEDMENT SHALL BE AS INDICATED ON NOTE B.1 ABOVE.

(C) TO EXISTING WOOD FRAME BUILDING: SOUTHERN PINE #2 W/ G = 0.55 MIN.

NOTES:
–5/16"ø CARBON STEEL TAPCON XL ANCHORS, AS MANUFACTURED BY ITW BUILDEX, INC.

C.1) MINIMUM THREADED PENETRATION OF TAPCON XL ANCHORS, INTO THE WOOD FRAME UNIT SHALL BE 2 1/2".
NO THREADED PENETRATION INTO STUCCO SHALL BE CONSIDERED AS PART OF THE REQUIRED THREADED PENETRATION.

C.2) MINIMUM EDGE DISTANCE OF TAPCON XL ANCHORS, INTO WOOD SHALL BE 2".

C.3) IN CASE THAT PRECAST STONE, PRECAST CONCRETE OR BRICK PANELS, VENEER OR PAVERS BE FOUND ON THE EXISTING WALL, ANCHORS SHALL BE LONG ENOUGH TO REACH THE MAIN SUBSTRATE BEHIND SUCH PANELS. MINIMUM THREADED PENETRATION SHALL BE AS INDICATED ON NOTE C.1 ABOVE.

7. ANCHORS SHALL BE INSTALLED FOLLOWING ALL OF THE RECOMMENDATIONS AND SPECIFICATIONS OF THE ANCHOR'S MANUFACTURER.

8. ANCHORS REQUIRED FOR MULLION CONNECTIONS SHALL BE AS SPECIFIED ON APPLICABLE SECTIONS SHOWN ON SHEETS 8 & 9 RESPECTIVELY.

   –5/8"ø KWIK BOLT TZ EXPANSION ANCHOR TO BE AS MANUFACTURED BY HILTI, INC.

   MINIMUM EDGE DISTANCE AND SPACING FOR ABOVE MENTIONED ANCHORS SHALL BE AS INDICATED BELOW OR AT ABOVE MENTIONED SHEET. EDGE DISTANCE AND EMBEDMENT ARE BEYOND ANY FINISH MATERIAL.

ANCHOR	SPACING @ 100%	EDGE DISTANCE @ 100%	EMBEDMENT CONCRETE	EMBEDMENT GROUT FILLED OR CONCRETE BLOCK
KWIK BOLT TZ	12"	8 3/4"	4" (3000 psi)	–

9. ROLL–UP MECHANISM NOT PART OF THIS APPROVAL, BUT SHALL BE CERTIFIED BY AN INDEPENDENT TESTING AGENCY.

10. ROLL–UP SHUTTERS INSTALLATION SHALL COMPLY WITH SPECS INDICATED IN THIS DRAWING PLUS ANY BUILDING AND ZONING REGULATIONS PROVIDED BY THE JURISDICTION WHERE PERMIT IS APPLIED TO.

11. THE INSTALLATION CONTRACTOR IS TO SEAL/CAULK ALL SHUTTER COMPONENT EDGES WHICH REMAIN IN CONTINUOUS CONTACT WITH THE BUILDING TO PREVENT WIND/RAIN INTRUSION.

12. (a) THIS P.E.D. PREPARED BY THIS ENGINEER IS GENERIC AND DOES NOT PROVIDE INFORMATION FOR A SITE SPECIFIC PROJECT; i.e. WHERE THE SITE CONDITIONS DEVIATE FROM THE P.E.D.

    (b) CONTRACTOR TO BE RESPONSIBLE FOR THE SELECTION, PURCHASE AND INSTALLATION INCLUDING LIFE SAFETY OF THIS PRODUCT, BASED ON THIS P.E.D. PROVIDED HE/SHE DOES NOT DEVIATE FROM THE CONDITIONS DETAILED ON THIS DOCUMENT. CONSTRUCTION SAFETY AT SITE IS THE CONTRACTOR'S RESPONSIBILITY.

    (c) THIS P.E.D. WILL BE CONSIDERED INVALID IF ALTERED BY ANY MEANS.

    (d) SITE SPECIFIC PROJECTS SHALL BE PREPARED BY A PROFESSIONAL ENGINEER OR REGISTERED ARCHITECT WHICH WILL BECOME THE ENGINEER OF RECORD (E.O.R.) FOR THE PROJECT AND WHO WILL BE RESPONSIBLE FOR THE PROPER USE OF THE P.E.D. ENGINEER OF RECORD, ACTING AS A DELEGATED ENGINEER TO THE P.E.D. ENGINEER, SHALL SUBMIT TO THIS LATTER THE SITE SPECIFIC DRAWINGS FOR REVIEW.

    (e) THIS P.E.D. SHALL BEAR THE DATE AND ORIGINAL SEAL AND SIGNATURE OF THE PROFESSIONAL ENGINEER OF RECORD THAT PREPARED IT.

13. SHUTTER MANUFACTURER'S LABEL SHALL BE LOCATED ON A READILY VISIBLE LOCATION AT ROLL–UP SHUTTER. ONE LABEL SHALL BE PLACED FOR EVERY OPENING. LABELING SHALL INDICATE MANUFACTURER'S NAME, PRODUCT NAME AND ASTM E–330, E–1886, E–1996 COMPLIANT.

T.D.I. 2006

WALTER A. TILLIT Jr. P.E.
PROFESSIONAL ENGINEER

6355 N.W. 36 STREET, STE. 305
VIRGINIA GARDENS, FL 33166
PHONE (305) 871–1530 FAX (305) 871–1531

TEXAS LIC. # 90691

OPEN BACK 58mm SLAT END RETENTION BERTHA ROLL-UP SHUTTER

AMERICAN SHUTTER SYSTEMS ASSOC., INC.
4268 WESTROADS DRIVE
WEST PALM BEACH, FL. 33407
PHONE: (877)999–2772 FAX: (561)209–8380

REV. No	DESCRIPTION	DATE	REV. No	DESCRIPTION	DATE
1			3		
2			4		

DRAWN BY: F.P.

08/28/08 DATE

08–014 DRAWING No

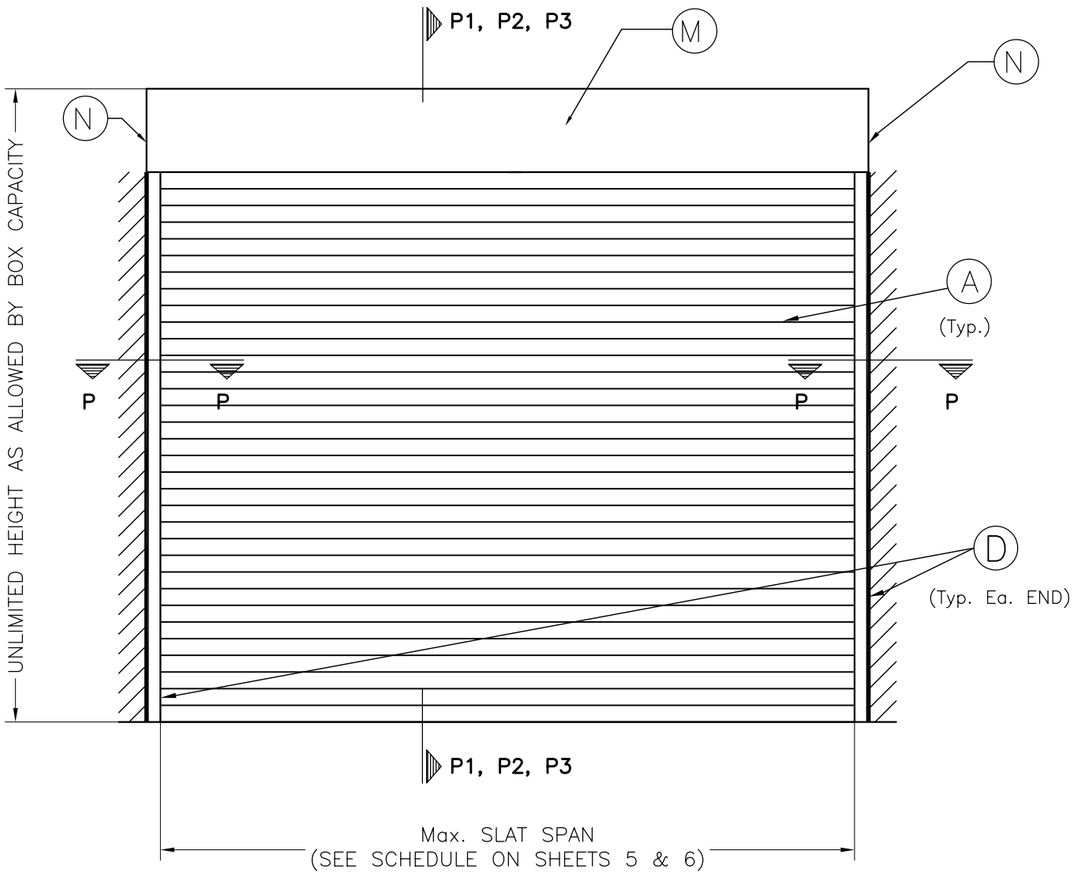

TYPICAL SINGLE UNIT ELEVATION

NOTE: SEE SHEET 3 & 4 FOR COMPONENTS NOMENCLATURE.

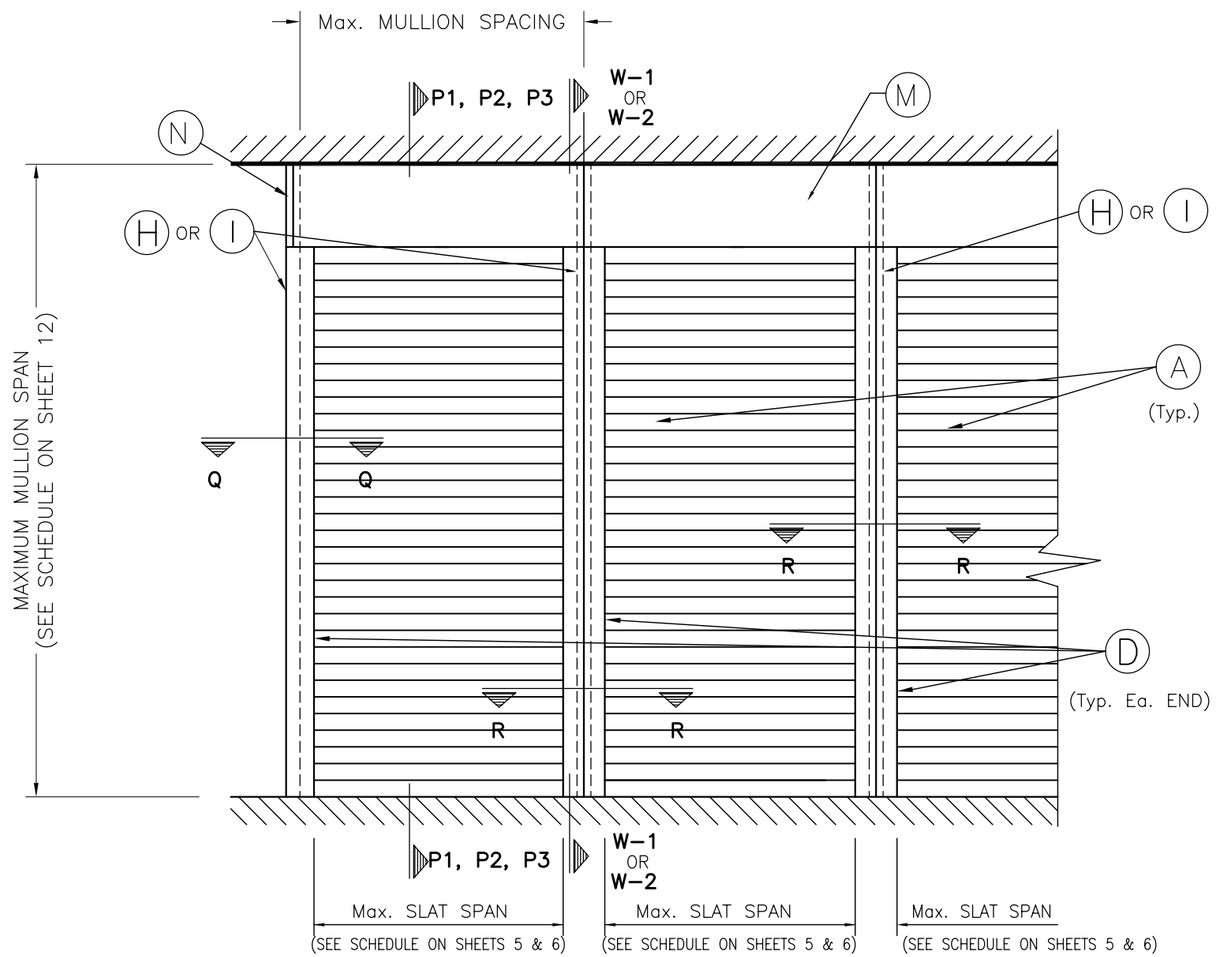

TYPICAL CONSECUTIVE SINGLE UNIT ELEVATION

NOTE: SEE SHEET 3 & 4 FOR COMPONENTS NOMENCLATURE.

NOTE:
SEE SECTIONS ON
SHEETS 5 THRU 9.

T.D.I. 2006

WALTER A. TILLIT Jr. P.E.
PROFESSIONAL ENGINEER
6355 N.W. 36 STREET, STE. 305
VIRGINIA GARDENS, FL 33166
PHONE (305) 871-1530 FAX (305) 871-1531
TEXAS LIC. # 90691

OPEN BACK 58mm SLAT END RETENTION
BERTHA ROLL-UP SHUTTER

AMERICAN SHUTTER SYSTEMS ASSOC., INC.
4268 WESTROADS DRIVE
WEST PALM BEACH, FL. 33407
PHONE: (877)999-2772 FAX: (561)209-8380

REV. No	DESCRIPTION	DATE	REV. No	DESCRIPTION	DATE
1			3		
2			4		

DRAWN BY: F.P.
08/28/08 DATE
08-014 DRAWING No
SHEET 2 OF 12

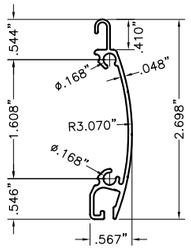

(A) OPEN BACK SLAT

58mm EXTRUDED ALUMINUM SLAT
6063–T6 ALUMINUM ALLOY

Fy = 28.13 ksi
Ftu = 31.46 ksi

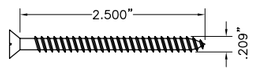

(B) END RETENTION SCREW

#10–12 x 2 1/2" CARBON STEEL S.M.S.
W/ DACROSHIELD COATING

Ftu = 200 ksi

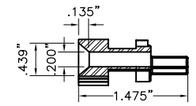

SECTION B–B

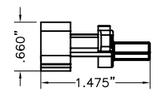

VIEW 1

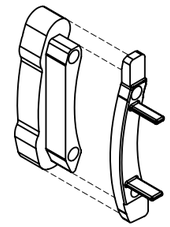

ISOMETRIC CUT

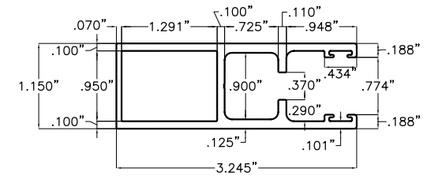

(D) TYPE 1 SIDE RAIL

EXTRUDED ALUMINUM TRACK
6063–T6 ALUMINUM ALLOY

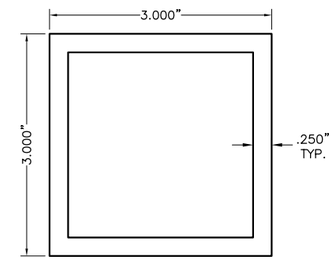

(F) INSIDE MOUNT TUBE

6063–T6 ALUMINUM ALLOY

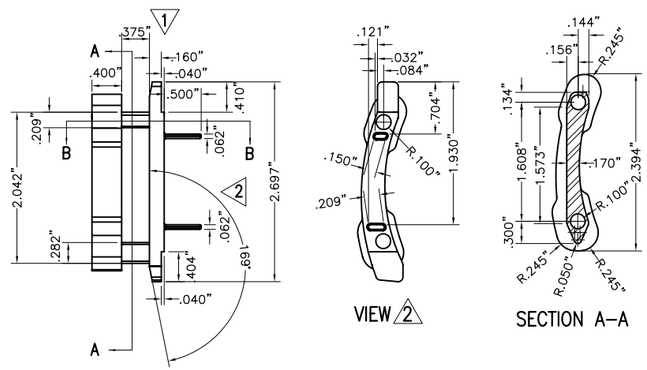

VIEW 2

SECTION A–A

(C) SLAT LOCK GUIDE

CELCON ACETAL COPOLYMER GRADE M90 AS MANUFACTURED BY TICONA ENGINEERING POLYMERS W/ THE FOLLOWING MECHANICAL PROPERTIES:
DENSITY: 88 p.c.f. (ISO 1183)
TENSILE MODULUS: 400.47 ksi (ISO 527–2/1A)
TENSILE STRESS AT YIELD: 9.57 ksi (ISO 527–2/1A)
FLEXURAL MODULUS: 370 ksi (ISO 178)
NOTCHED IMPACT STRENGTH (IZOD): 5.7 KJ/m² (ISO 180/1A)

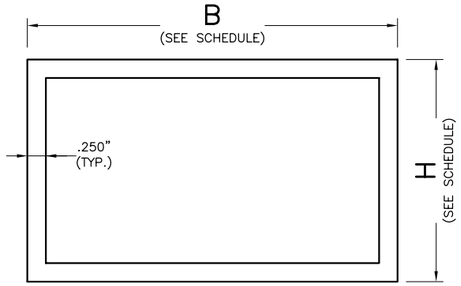

(G) BUILD–OUT TUBE

6063–T6 ALUMINUM ALLOY

B	H
3"	2"
4"	2"
5"	2"
6"	2"
3"	3"

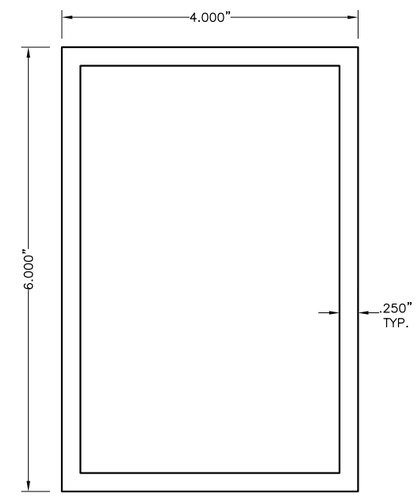

(H) TYPE 1 MULLION

6061–T6 ALUMINUM ALLOY

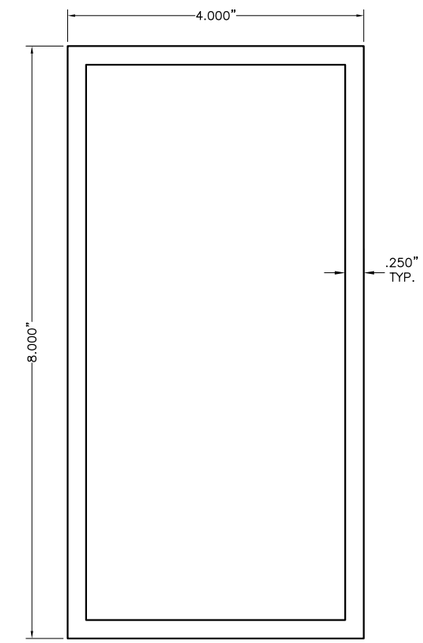

(I) TYPE 2 MULLION

6061–T6 ALUMINUM ALLOY

COMPONENTS

SCALE: 1/2" = 1"

T.D.I. 2006

WALTER A. TILLIT Jr. P.E.
PROFESSIONAL ENGINEER

6355 N.W. 36 STREET, STE. 305
VIRGINIA GARDENS, FL 33166
PHONE (305) 871–1530 FAX (305) 871–1531

TEXAS LIC. # 90691

OPEN BACK 58mm SLAT END RETENTION
BERTHA ROLL-UP SHUTTER

AMERICAN SHUTTER SYSTEMS ASSOC., INC.
4268 WESTROADS DRIVE
WEST PALM BEACH, FL. 33407
PHONE: (877)999–2772 FAX: (561)209–8380

REV. No	DESCRIPTION	DATE	REV. No	DESCRIPTION	DATE
1			3		
2			4		

DRAWN BY: F.P.

08/28/08
DATE

08–014
DRAWING No

SHEET 3 OF 12

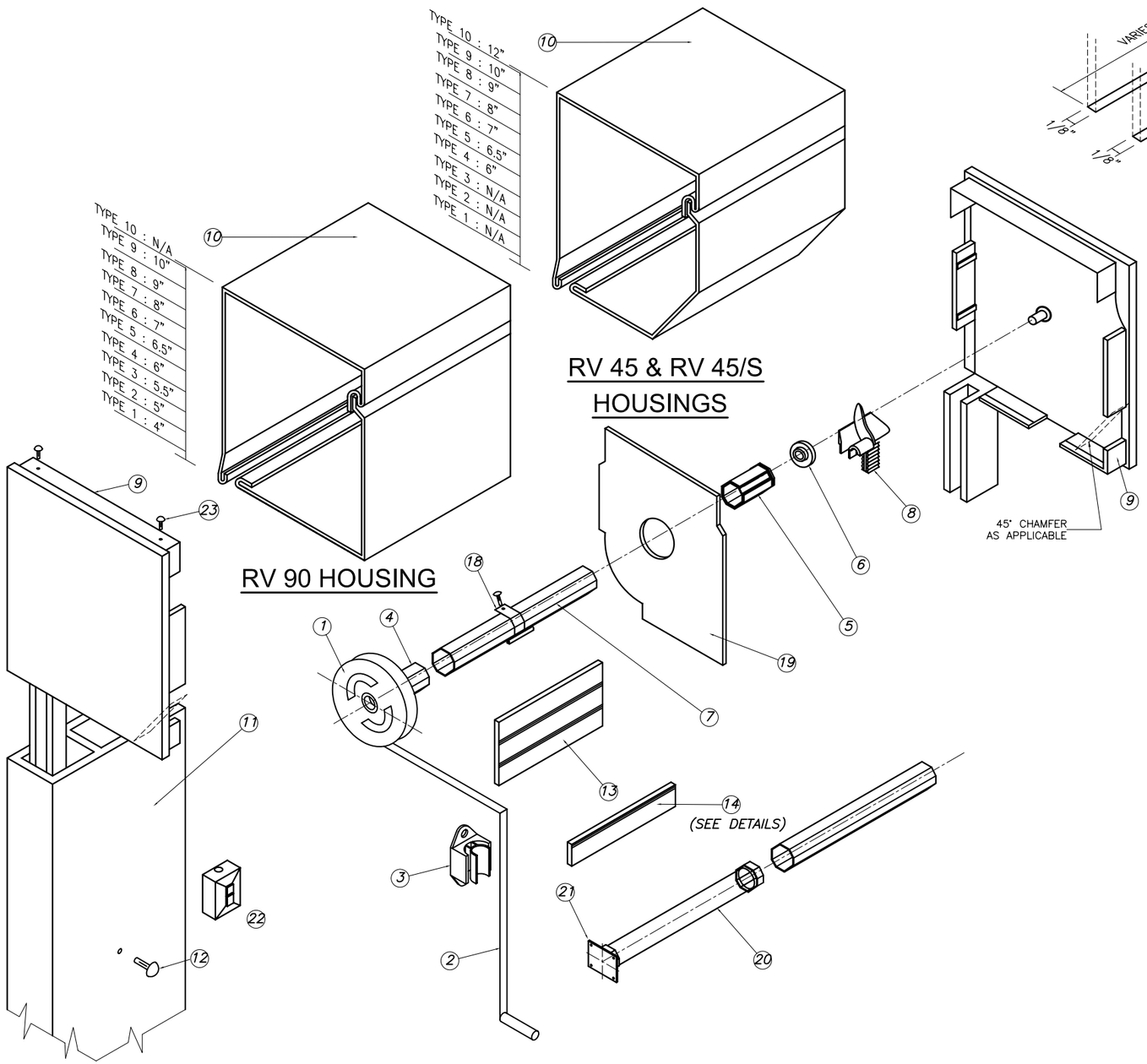

(M) BOX COMPONENTS AND ASSEMBLY DETAIL END CAP SYSTEM

SEE SHEET 4A FOR ALTERNATE ROLL–UP SHUTTER LIFTING MECHANISMS (SEE NOTE 9 ON SHEET 1 OF 12)

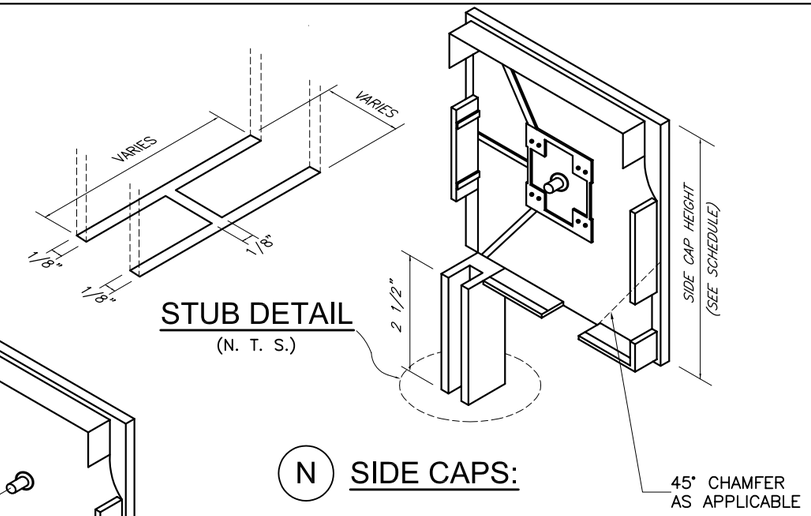

STUB DETAIL
(N. T. S.)

(N) SIDE CAPS:

COMPONENTS FOR GEAR OPERATED SYSTEM

1 – GEAR
2 – UNIVERSAL & CRANK
3 – CRANK HOLDER(OPTIONAL)
4 – GEAR INSERT(GEAR TO AXLE CONNECTOR)
5 – IDLER INSERT
6 – BALL BEARING
7 – OCTAGONAL AXLE *
8 – ENTRY GUIDES
9 – SIDE/END CAP *
10 – HOUSING(FRONT & BOTTOM), 0.040" THICK
11 – SIDE RAIL
12 – PLUG–BUTTOMS
13 – ALUMINUM SLATS
14 – BASE SLAT
15 – PLASTIC STOPS(OPTIONAL)
16 – SIDE LOCKS(OPTIONAL)
17 – STAPLES(OPTIONAL)
18 – SPRINGLOCK HANGER
19 – SAFETY PLATES

ADDITIONAL COMPONENTS FOR MOTORIZED OPERATED SYSTEM

20 – TUBULAR MOTOR
21 – MOTOR BRACKET
22 – SWITCH

FASTENERS

23 – 3/16" ALUMINUM POP RIVETS(6 REQ'D EA. SIDE CAP) : 2 @ TOP, 2 @ REAR, 2@ BOTTOM

* SHALL BE CAPABLE TO SUSTAIN SLAT'S WEIGHT AND ASSURE LIFTING MECHANISM (SEE NOTE 9/1)

T.D.I. 2006

WALTER A. TILLIT Jr. P.E.
PROFESSIONAL ENGINEER
6355 N.W. 36 STREET, STE. 305
VIRGINIA GARDENS, FL 33166
PHONE (305) 871–1530 FAX (305) 871–1531
TEXAS LIC. # 90691

OPEN BACK 58mm SLAT END RETENTION BERTHA ROLL-UP SHUTTER

AMERICAN SHUTTER SYSTEMS ASSOC., INC.
4268 WESTROADS DRIVE
WEST PALM BEACH, FL. 33407
PHONE: (877)999–2772 FAX: (561)209–8380

REV. No	DESCRIPTION	DATE	REV. No	DESCRIPTION	DATE
1			3		
2			4		

DRAWN BY: F.P.
08/28/08 DATE
08–014 DRAWING No
SHEET 4 OF 12

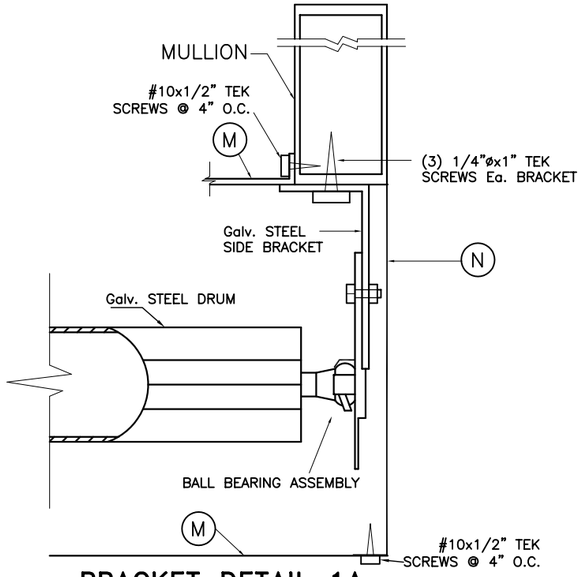

BRACKET DETAIL 1A

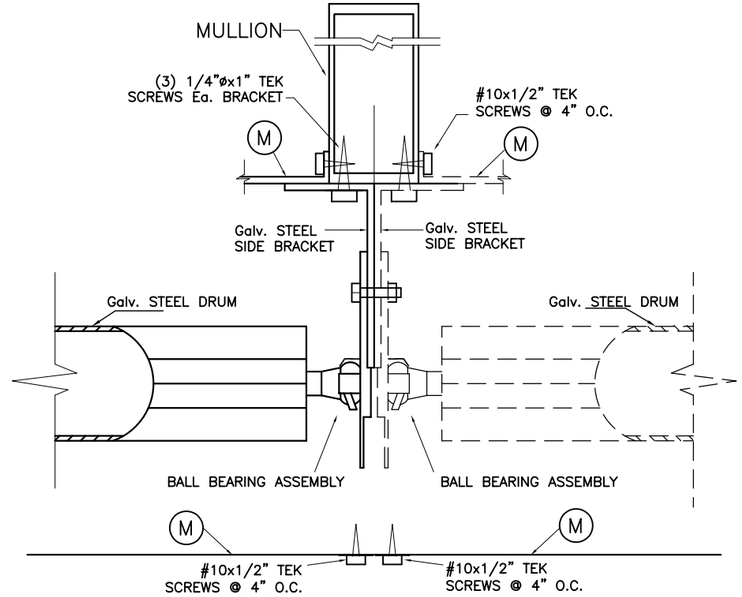

BRACKET DETAIL 2

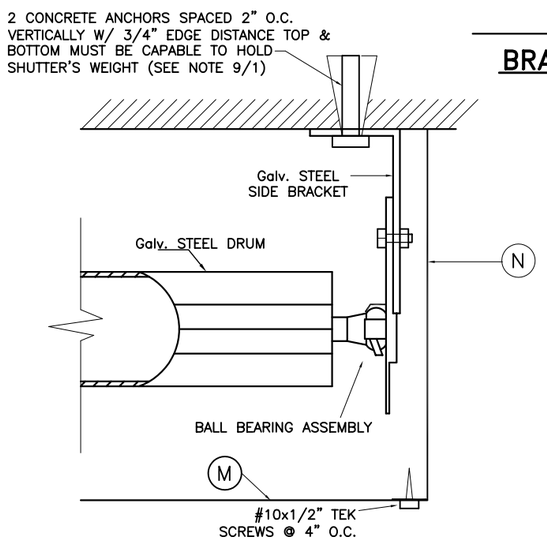

BRACKET DETAIL 1

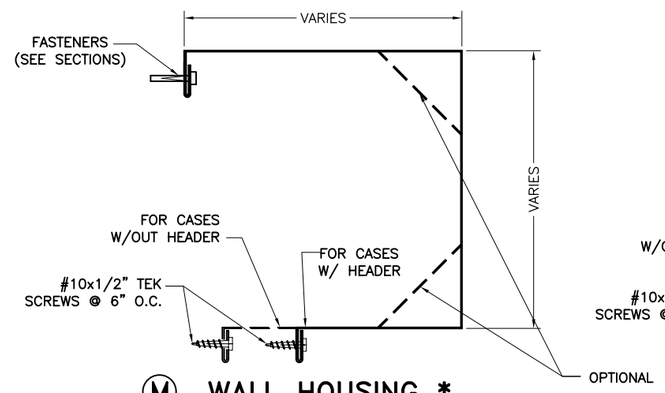

(M) WALL HOUSING *

SCALE: 3/16" = 1"
3105–H14 ALUMINUM ALLOY
THICKNESS: .032"

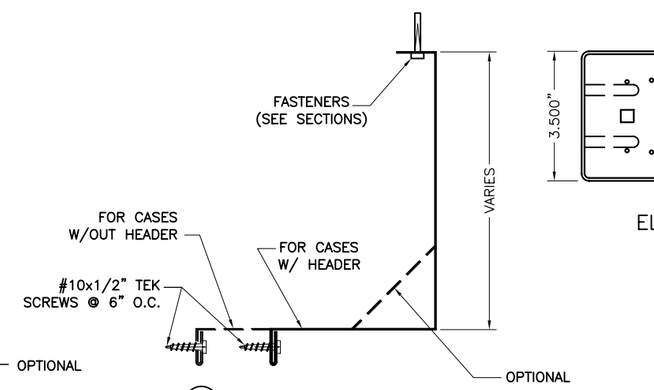

(M) ALTERNATE WALL HOUSING *

SCALE: 3/16" = 1"
3105–H14 ALUMINUM ALLOY
THICKNESS: .032"

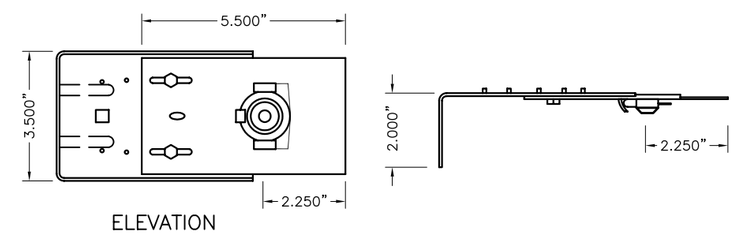

GALV. STEEL SIDE BRACKET *

SCALE: 1/4" = 1"
1010 ELITE ROLLED STEEL F. E.
P. O. 1 Z 200 DESIGNATION
Ftu= 410 NW/MM2. % OF STRETCH
MINIMAL ON TEST. BAR OF 80 MM: 24 %
G–90 GALVANIZED COATING Thk.: .060"

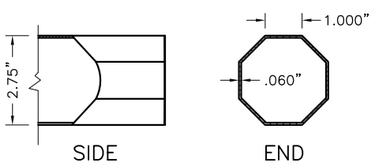

GALV. STEEL DRUM *

SCALE: 1/4" = 1"
1010 ELITE ROLLED STEEL F. E.
P. O. 1 Z 200 DESIGNATION
Ftu= 410 NW/MM2. % OF STRETCH
MINIMAL ON TEST. BAR OF 80 MM: 24 %
G–90 GALVANIZED COATING Thk.: .060"

(N) SHUTTER SIDE COVER *

SCALE: 3/16" = 1"
3105–H14 ALUMINUM ALLOY
THICKNESS: .032"

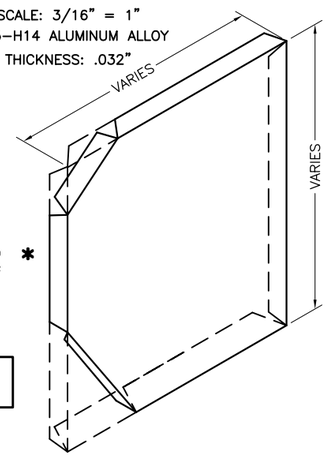

*** SEE NOTE 9 ON SHEET 1 OF 12**

SEE SHEET 4 FOR ALTERNATE ROLL–UP SHUTTER LIFTING MECHANISMS

T.D.I. 2006

WALTER A. TILLIT Jr. P.E.
PROFESSIONAL ENGINEER
6355 N.W. 36 STREET, STE. 305
VIRGINIA GARDENS, FL 33166
PHONE (305) 871–1530 FAX (305) 871–1531
TEXAS LIC. # 90691

OPEN BACK 58mm SLAT END RETENTION
BERTHA ROLL-UP SHUTTER

AMERICAN SHUTTER SYSTEMS ASSOC., INC.
4268 WESTROADS DRIVE
WEST PALM BEACH, FL. 33407
PHONE: (877)999–2772 FAX: (561)209–8380

REV. No	DESCRIPTION	DATE	REV. No	DESCRIPTION	DATE
1			3		
2			4		

DRAWN BY: F.P.
08/28/08 DATE
08–014 DRAWING No
SHEET 4A OF 12

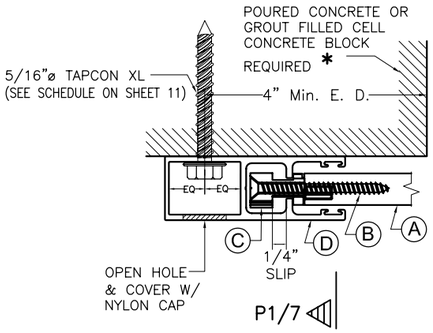

SECTION P – P (1) : WALL MOUNT

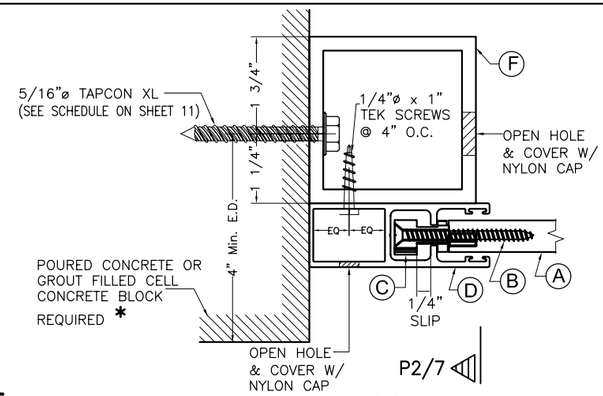

SECTION P – P (2) : INSIDE WALL MOUNT

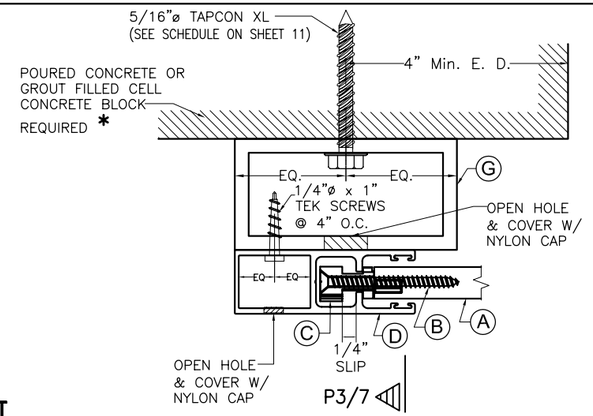

SECTION P – P (3) : BUILD-OUT MOUNT

SIDE RAIL CONNECTIONS

TO POURED CONCRETE OR
GROUT FILLED CELL CONCRETE BLOCK WALL

SCALE: 1/2" = 1"

* NOTE:
IT SHALL BE THE RESPONSIBILITY OF THE CONTRACTOR TO VERIFY THAT EXISTING STRUCTURE IS DESIGNED TO SUPPORT Vx AND Vy FORCES PER UNIT FOOT OF DOOR HEIGHT AT BOTH JAMBS.
SEE SCHEDULE 1 ON SHEET 10 FOR Vx & Vy VALUES.

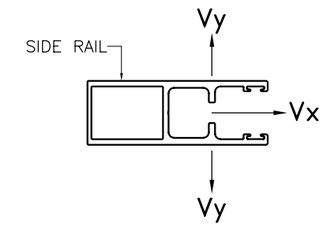

SLAT PERFORMANCE CHART:
MAXIMUM DESIGN PRESSURE RATING (p.s.f) FOR A 1/4" SLIP (in) AND SLAT MOUNT CONDITIONS INDICATED ON THIS SHEET

(USE MAXIMUM VALUE BETWEEN POSITIVE AND NEGATIVE LOAD)

MAXIMUM DESIGN LOAD (p.s.f.)	MAXIMUM REQUIRED SPAN (FT) **	MINIMUM SEPARATION TO GLASS (in)
70.0 OR LESS	12'–0"	1"

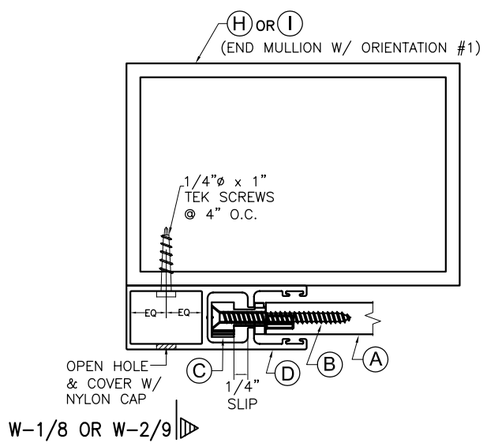

SECTION Q – Q : MULLION MOUNT (FACE MOUNT)

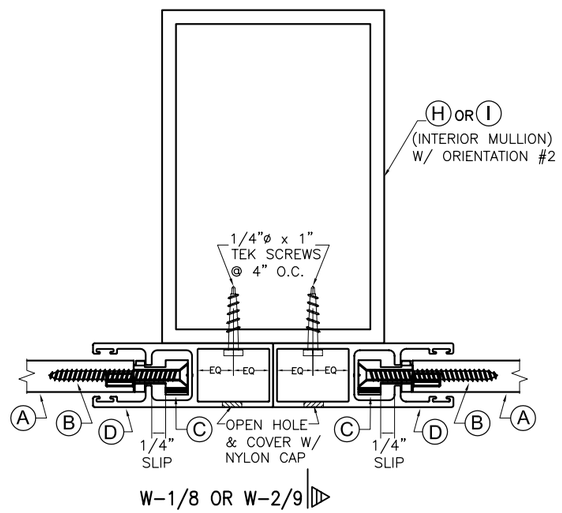

SECTION R – R : MULLION MOUNT (FACE MOUNT)

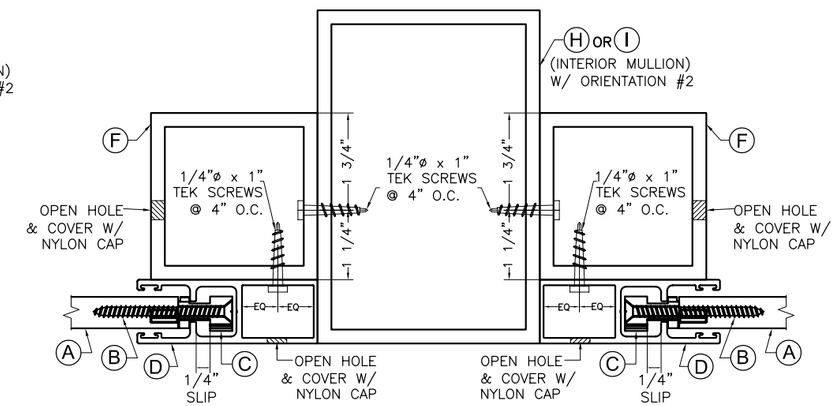

SECTION R – R : MULLION MOUNT (INSIDE MOUNT)

** NOTE:

ABOVE INDICATED MAX. SLAT SPANS MAY BE USED AS LONG AS ANCHOR SPACING SCHEDULES ON SHEET 10 INDICATE THAT A SPACING IS AVAILABLE FOR THE CORRESPONDING SLAT SPAN AND DESIGN LOAD.

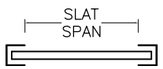

SLAT SPAN DEFINITION

SIDE RAIL CONNECTIONS

TO MULLIONS

SCALE: 1/2" = 1"

T.D.I. 2006

WALTER A. TILLIT Jr. P.E.
PROFESSIONAL ENGINEER

6355 N.W. 36 STREET, STE. 305
VIRGINIA GARDENS, FL 33166
PHONE (305) 871–1530 FAX (305) 871–1531

TEXAS LIC. # 90691

OPEN BACK 58mm SLAT END RETENTION
BERTHA ROLL-UP SHUTTER

AMERICAN SHUTTER SYSTEMS ASSOC., INC.
4268 WESTROADS DRIVE
WEST PALM BEACH, FL. 33407
PHONE: (877)999–2772 FAX: (561)209–8380

REV. No	DESCRIPTION	DATE	REV. No	DESCRIPTION	DATE
1			3		
2			4		

DRAWN BY: F.P.

08/28/08
DATE

08–014
DRAWING No

SHEET 5 OF 12

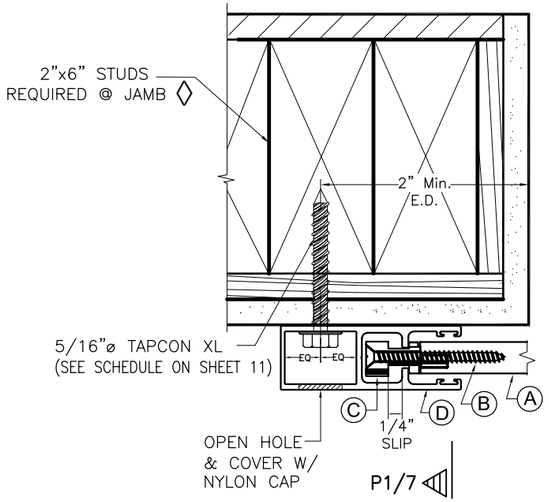

SECTION P – P (1) : WALL MOUNT

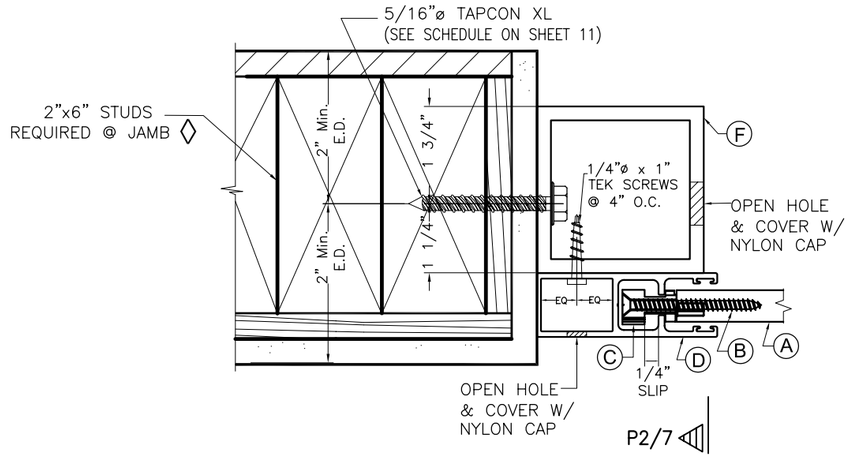

SECTION P – P (2) : INSIDE WALL MOUNT

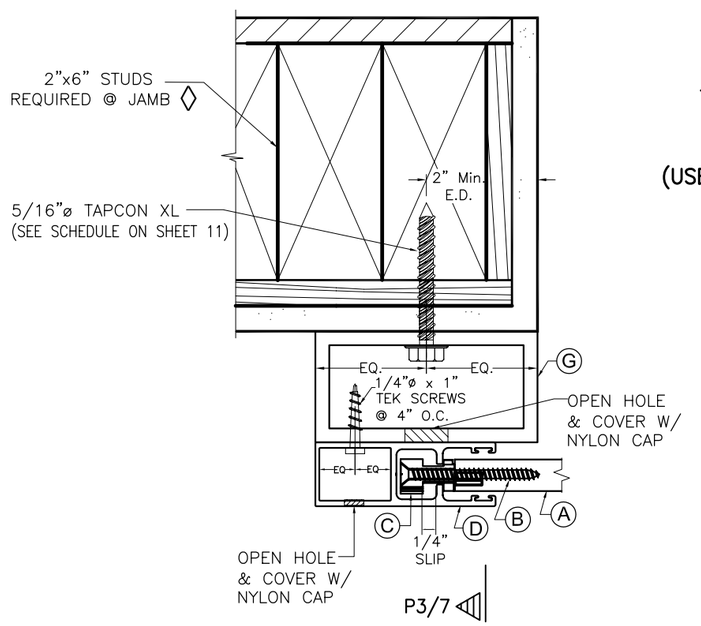

SECTION P – P (3) : BUILD-OUT MOUNT

SLAT PERFORMANCE CHART:
MAXIMUM DESIGN PRESSURE RATING (p.s.f)
FOR A 1/4" SLIP (in) AND SLAT MOUNT
CONDITIONS INDICATED ON THIS SHEET

(USE MAXIMUM VALUE BETWEEN POSITIVE AND NEGATIVE LOAD)

MAXIMUM DESIGN LOAD (p.s.f.)	MAXIMUM SLAT SPAN (FT)	MINIMUM SEPARATION TO GLASS (in) *
60.0 OR LESS	8'–6"	1"

* EXCEPT THAT MIN. SEPARATION TO GLASS FOR WIND ZONE 4 IS : 10 ¾"

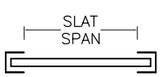

SLAT SPAN DEFINITION

◊ NOTES:

1. MINIMUM AMOUNT OF WOOD STUDS REQUIRED AT EACH JAMB.

MAXIMUM DESIGN LOAD RANGE (p.s.f.)	MAXIMUM OPENING HEIGHT (FT)	SLAT SPAN RANGE		
		3'–0" TO 5'–0"	5'–0" TO 6'–0"	6'–0" TO 8'–6"
≤ 30.0	7	2	2	3
	6	2	2	3
	5	2	2	3
	4	2	2	2
	3	2	2	2
>31–40	7	2	2	4
	6	2	2	4
	5	2	2	3
	4	2	2	3
	3	2	2	2
>41–50	7	2	2	5
	6	2	2	4
	5	2	2	3
	4	2	2	3
	3	2	2	2
>51–60	7	2	3	5
	6	2	2	4
	5	2	2	4
	4	2	2	3
	3	2	2	2

2. FOR NEW FRAME CONSTRUCTION: WOOD MEMBER TO BE SOUTHERN PINE No. 2 WITH SPECIFIC DENSITY OF 0.55 OR EQUAL.

3. MINIMUM THREADED PENETRATION OF TAPCONS XL INTO WOOD MEMBER TO BE 2 1/2".

4. MULTIPLE STUDS TO BE FASTENED TO EACH OTHER W/ 2–#14x3" F.H. WOOD SCREWS @ 4" O.C. FULL HEIGHT, FOLLOWING A SEQUENCE FROM FIRST TO LAST STUD. ALTERNATIVELY, USE 1/2"ø THRU BOLTS @ 6" O.C W/ NUT & WASHER FROM FIRST TO LAST STUD.
CONNECTION OF MULTIPLE STUDS TOP & BOTTOM SHALL RESIST A HORIZONTAL REACTION OF 3500 LB. DESIGN OF THIS CONNECTION IS BY PROFESSIONAL OF RECORD FOR THE STRUCTURE.

5. IT SHALL BE THE RESPONSIBILITY OF THE CONTRACTOR TO VERIFY THE INSTALLATION OR EXISTENCE OF THE REQ'D MINIMUM AMOUNT OF STUDS INDICATED ON SCHEDULE AT BOTH JAMBS.

SIDE RAIL CONNECTIONS
TO WOOD WALL

T.D.I. 2006

WALTER A. TILLIT Jr. P.E.
PROFESSIONAL ENGINEER
6355 N.W. 36 STREET, STE. 305
VIRGINIA GARDENS, FL 33166
PHONE (305) 871–1530 FAX (305) 871–1531
TEXAS LIC. # 90691

OPEN BACK 58mm SLAT END RETENTION
BERTHA ROLL-UP SHUTTER

AMERICAN SHUTTER SYSTEMS ASSOC., INC.
4268 WESTROADS DRIVE
WEST PALM BEACH, FL. 33407
PHONE: (877)999–2772 FAX: (561)209–8380

REV. No	DESCRIPTION	DATE	REV. No	DESCRIPTION	DATE
1			3		
2			4		

DRAWN BY: F.P.
08/28/08 DATE
08–014 DRAWING No
SHEET 6 OF 12

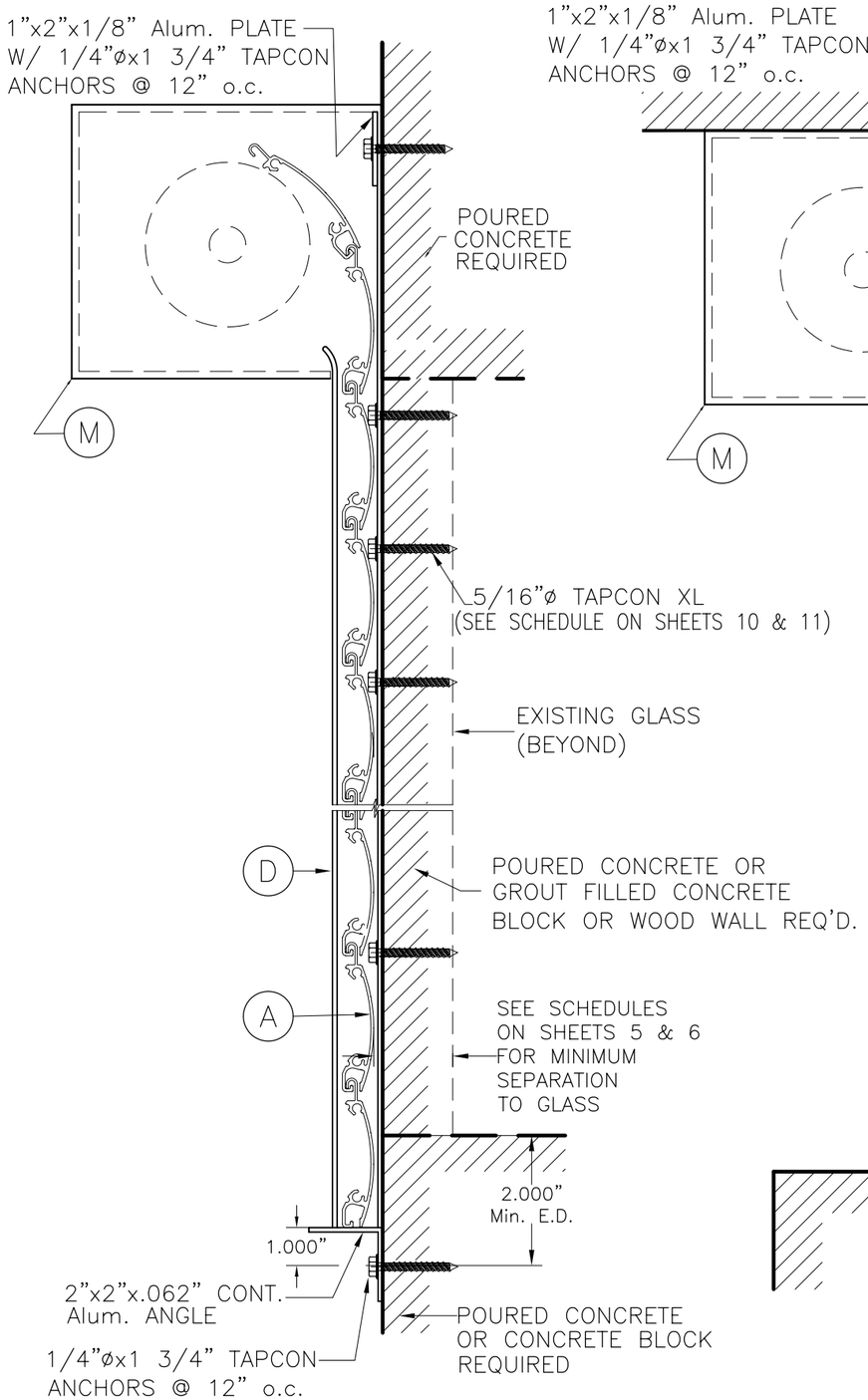

SECTION P1-P1

N. T. S.

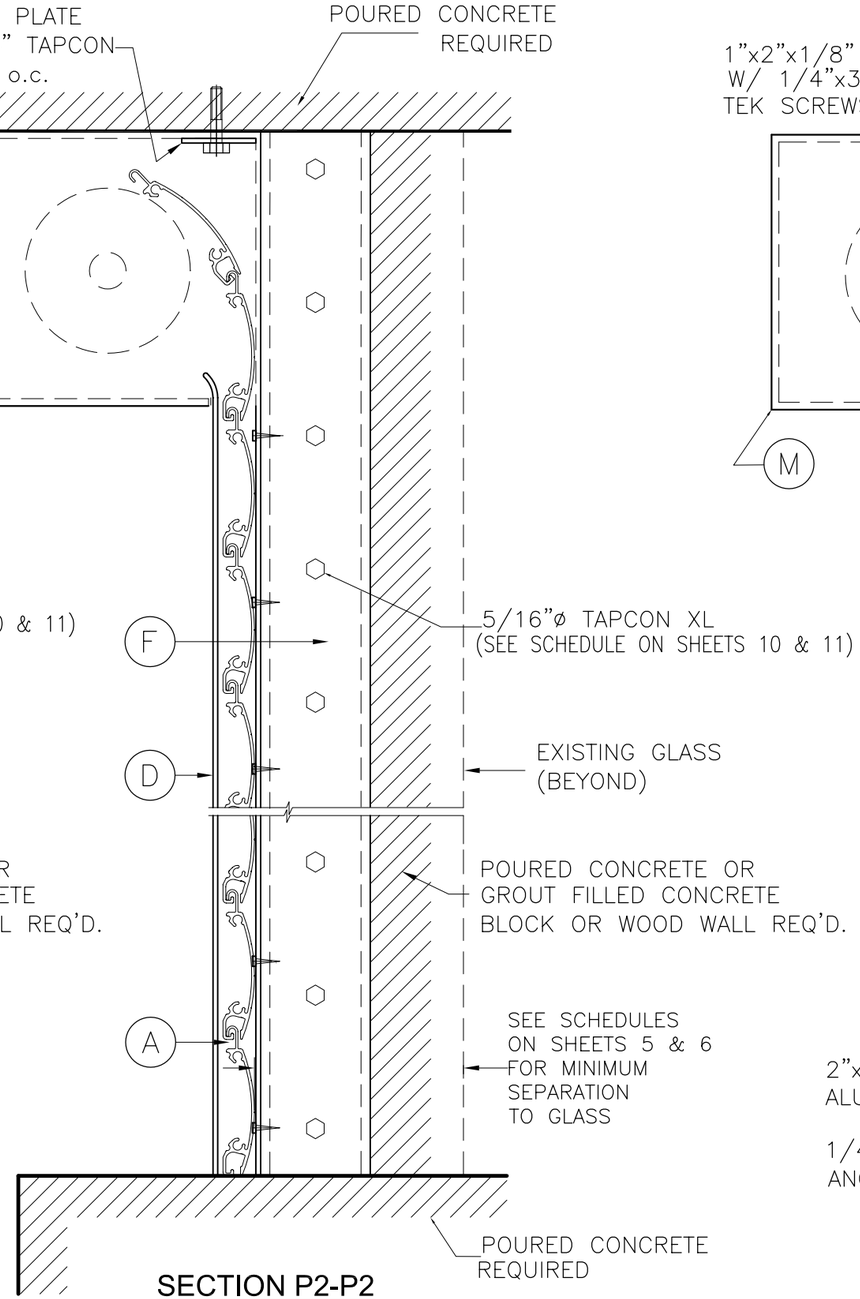

SECTION P2-P2

N. T. S.

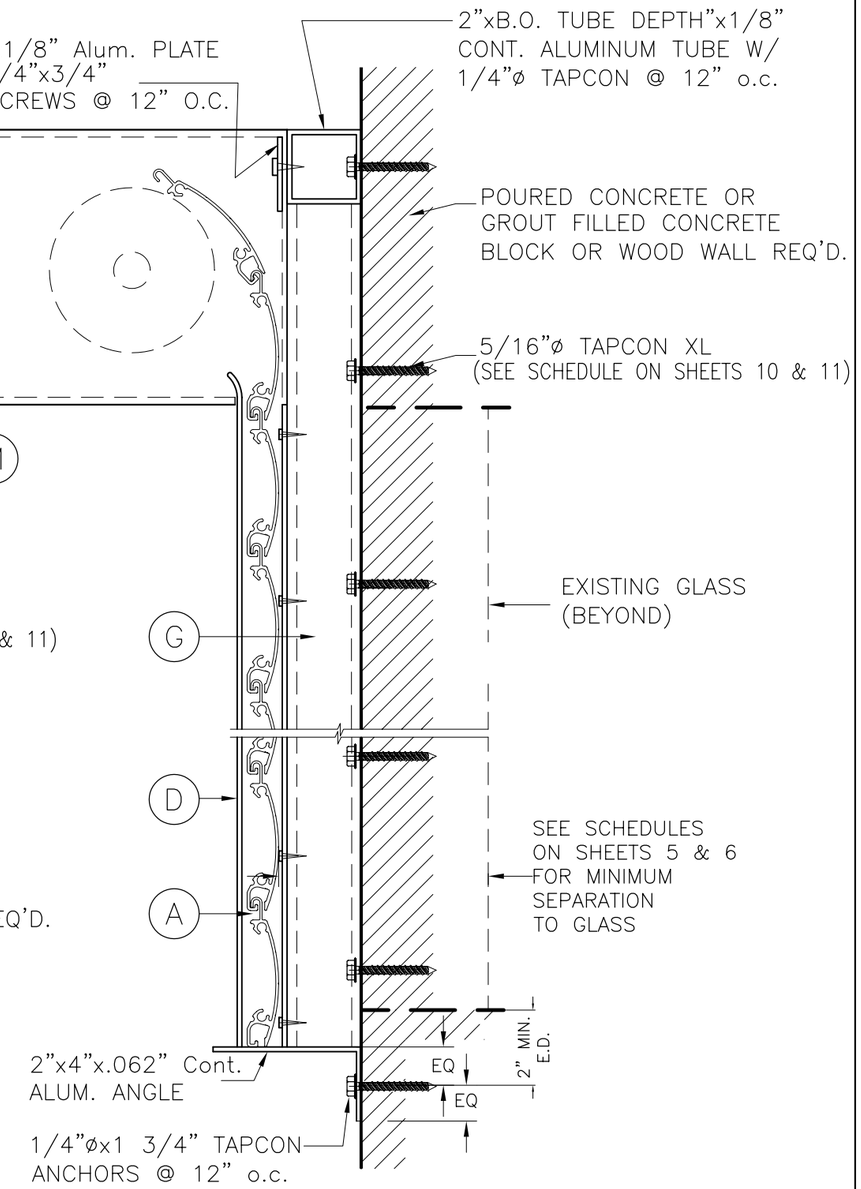

SECTION P3-P3

N. T. S.

T.D.I. 2006

WALTER A. TILLIT Jr. P.E.
PROFESSIONAL ENGINEER

6355 N.W. 36 STREET, STE. 305
VIRGINIA GARDENS, FL 33166
PHONE (305) 871-1530 FAX (305) 871-1531

TEXAS LIC. # 90691

OPEN BACK 58mm SLAT END RETENTION BERTHA ROLL-UP SHUTTER

AMERICAN SHUTTER SYSTEMS ASSOC., INC.
4268 WESTROADS DRIVE
WEST PALM BEACH, FL. 33407
PHONE: (877)999-2772 FAX: (561)209-8380

REV. No	DESCRIPTION	DATE	REV. No	DESCRIPTION	DATE
1			3		
2			4		

DRAWN BY: F.P.

08/28/08 DATE

08-014 DRAWING No

SHEET 7 OF 12

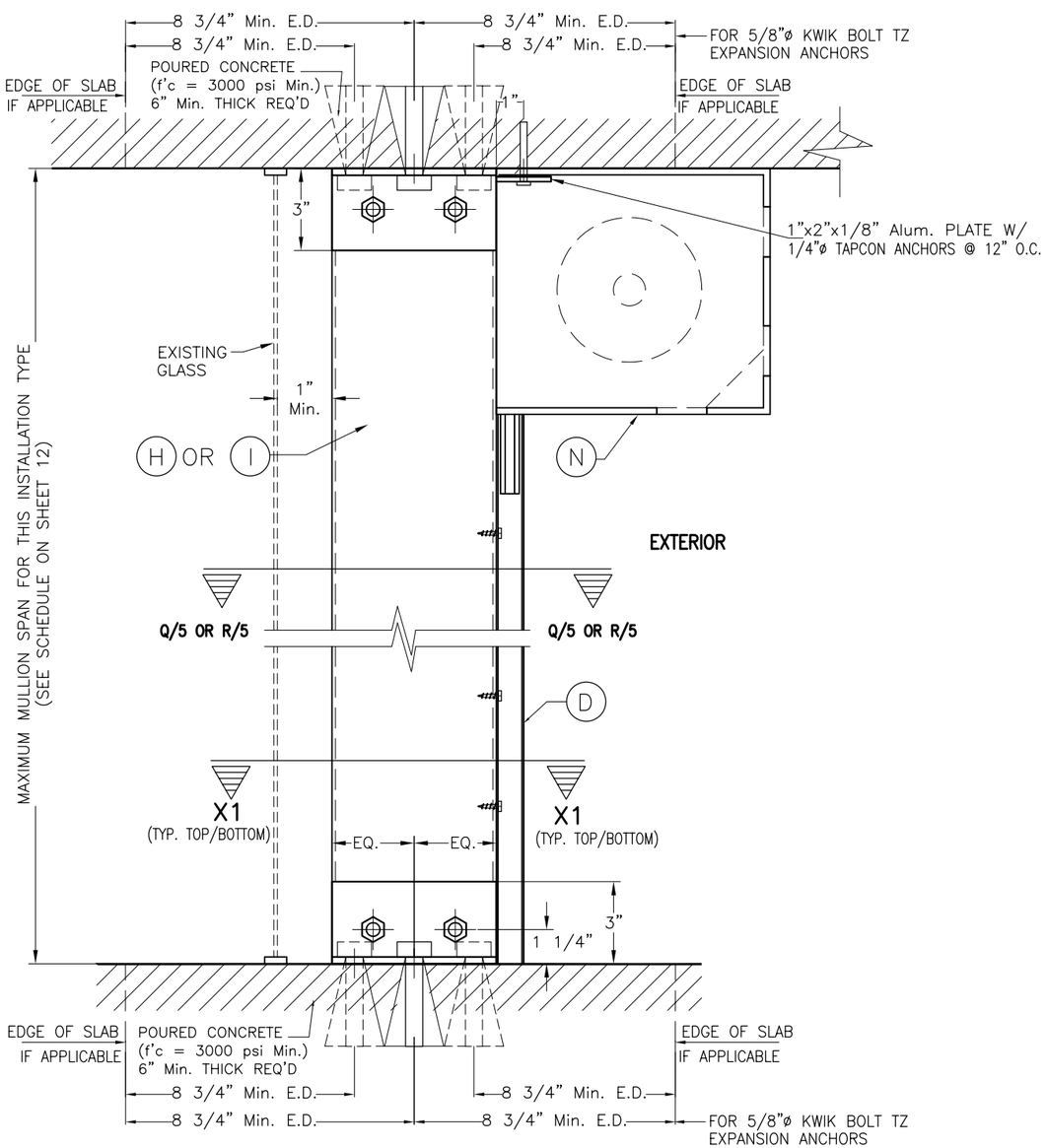

FLOOR TO CEILING / TRAPPED MOUNTING : MULLION (H) OR (I)
SECTION W-1

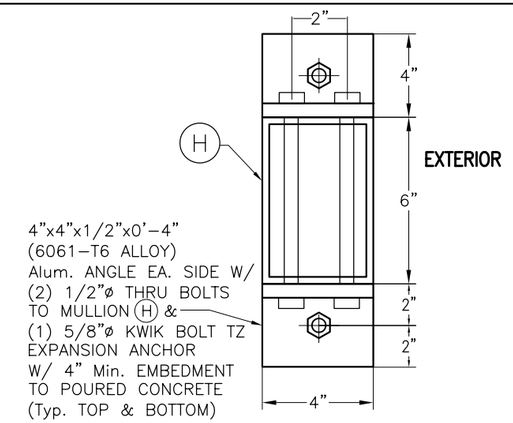

SECTION X1-X1 W/ (H) *
(W/ ORIENTATION # 1)
VALID ONLY FOR END MULLIONS

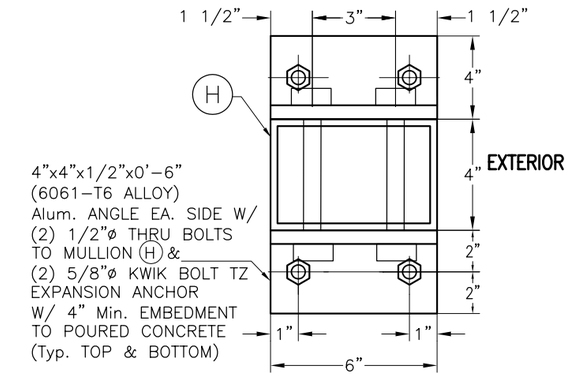

ALTERNATIVE SECTION X1-X1 W/ (H) *
(W/ ORIENTATION # 2)
VALID ONLY FOR INTERIOR MULLIONS

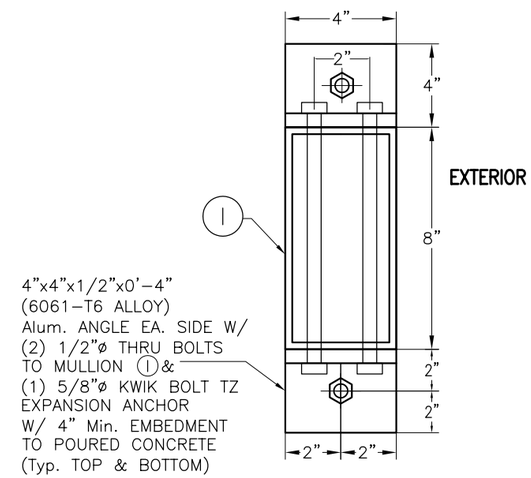

SECTION X1-X1 W/ (I) *
(W/ ORIENTATION # 1)
VALID ONLY FOR END MULLIONS

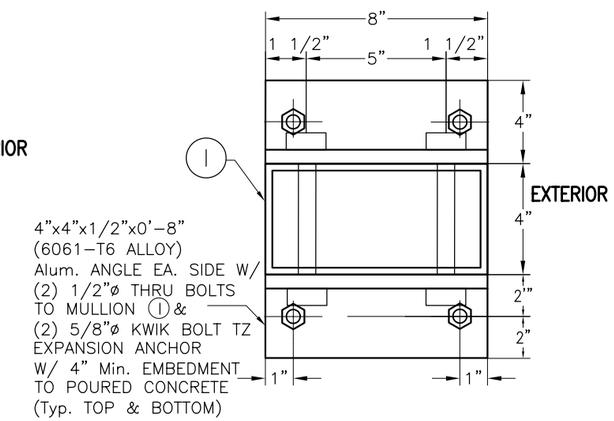

ALTERNATIVE SECTION X1-X1 W/ (I) *
(W/ ORIENTATION # 2)
VALID ONLY FOR INTERIOR MULLIONS

* SIDE RAIL (D) NOT SHOWN FOR CLARITY.
IT GOES ON EXTERIOR SIDE OF MULLION.

END & INTERIOR TRAPPED MOUNTED MULLION INSTALLATION

SCALE: 3/16" = 1"

T.D.I. 2006

WALTER A. TILLIT Jr. P.E.
PROFESSIONAL ENGINEER
6355 N.W. 36 STREET, STE. 305
VIRGINIA GARDENS, FL 33166
PHONE (305) 871-1530 FAX (305) 871-1531
TEXAS LIC. # 90691

OPEN BACK 58mm SLAT END RETENTION BERTHA ROLL-UP SHUTTER

AMERICAN SHUTTER SYSTEMS ASSOC., INC.
4268 WESTROADS DRIVE
WEST PALM BEACH, FL. 33407
PHONE: (877)999-2772 FAX: (561)209-8380

REV. No	DESCRIPTION	DATE	REV. No	DESCRIPTION	DATE
1			3		
2			4		

DRAWN BY: F.P.
08/28/08 DATE
08-014 DRAWING No
SHEET 8 OF 12

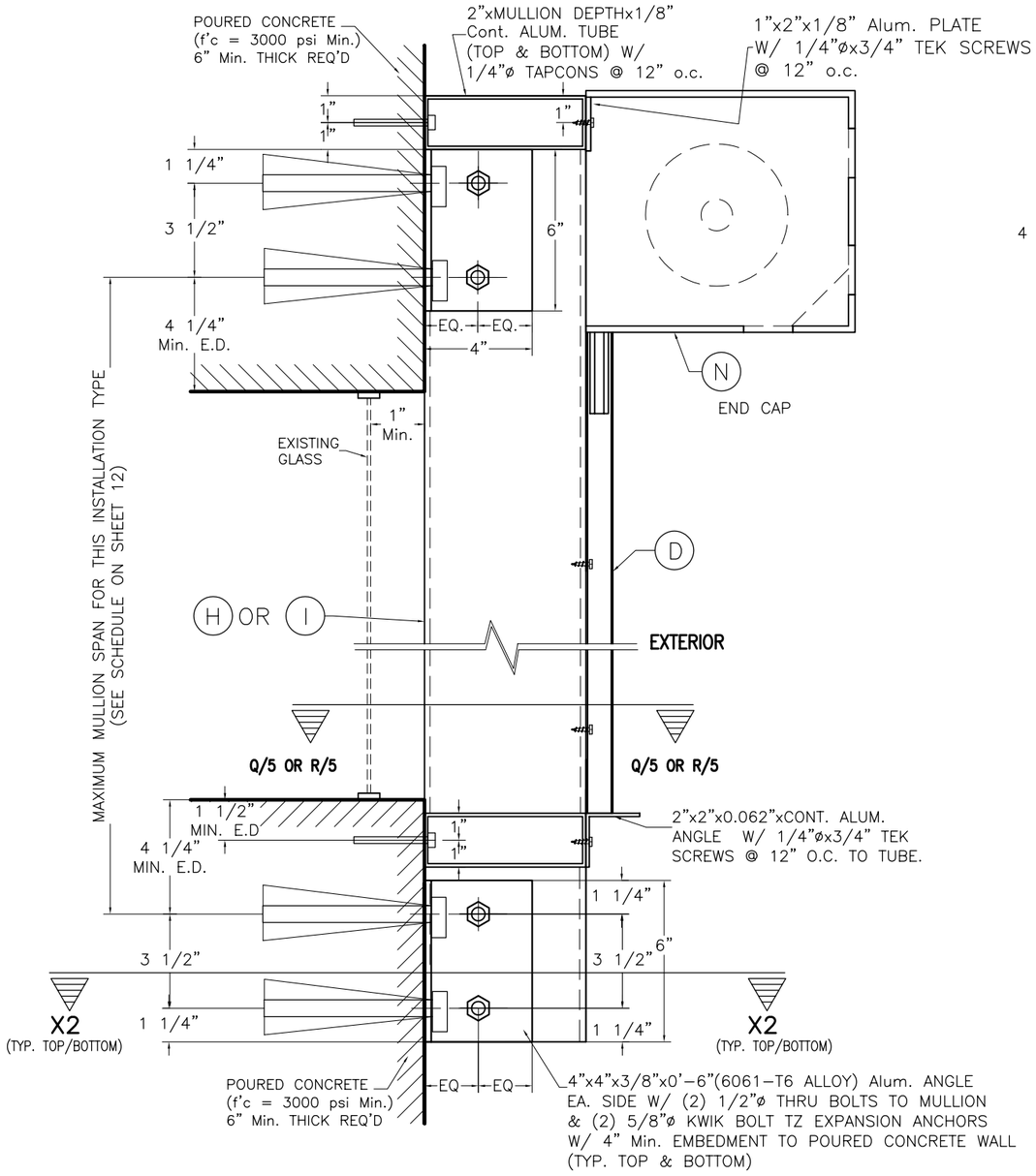

WALL MOUNTING : MULLION (H) OR (I)
POURED CONCRETE WALL
SECTION W-2

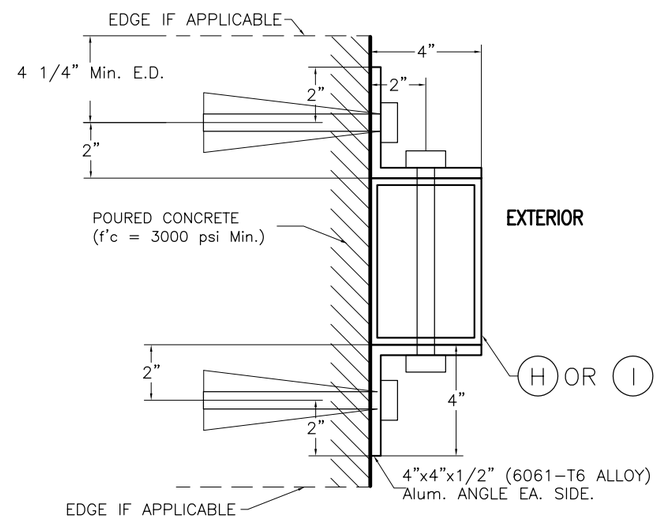

SECTION X2-X2 W/ (H) OR (I) *
(W/ ORIENTATION # 1)
VALID ONLY FOR END MULLIONS

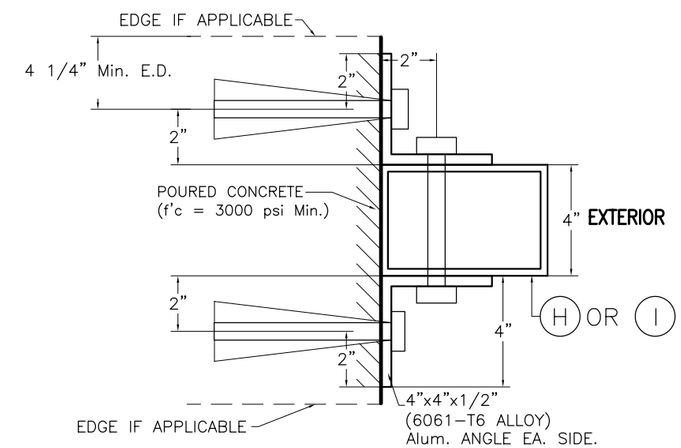

ALTERNATIVE SECTION X2-X2 W/ (H) OR (I) *
(W/ ORIENTATION # 2)
VALID ONLY FOR INTERIOR MULLIONS

* SIDE RAIL (D) NOT SHOWN FOR CLARITY.
IT GOES ON EXTERIOR SIDE OF MULLION.

END & INTERIOR WALL MOUNTED MULLION INSTALLATION
SCALE: 3/16"= 1"

T.D.I. 2006

WALTER A. TILLIT Jr. P.E.
PROFESSIONAL ENGINEER
6355 N.W. 36 STREET, STE. 305
VIRGINIA GARDENS, FL 33166
PHONE (305) 871-1530 FAX (305) 871-1531
TEXAS LIC. # 90691

OPEN BACK 58mm SLAT END RETENTION
BERTHA ROLL-UP SHUTTER

AMERICAN SHUTTER SYSTEMS ASSOC., INC.
4268 WESTROADS DRIVE
WEST PALM BEACH, FL. 33407
PHONE: (877)999-2772 FAX: (561)209-8380

REV. No	DESCRIPTION	DATE	REV. No	DESCRIPTION	DATE
1			3		
2			4		

DRAWN BY: F.P.
08/28/08 DATE
08-014 DRAWING No
SHEET 9 OF 12

SIDE RAIL MAX. ANCHOR'S SPACING FOR WALL MOUNT & MAXIMUM DESIGN LOAD RANGE & SLAT SPAN RANGE

MAXIMUM DESIGN LOAD RANGE (p.s.f.)	SLAT SPAN RANGE		
	3'–0" TO 6'–6" SPACING (in)	6'–6" TO 8'–6" SPACING (in)	8'–6" TO 12'–0" SPACING (in)
≤ 30.0	4"	4"	4"
>31–40	4"	4"	4"
>41–50	4"	4"	4"
>51–60	4"	4"	4"
>61–70	4"	4"	4"

SIDE RAIL MAX. ANCHOR'S SPACING FOR INSIDE MOUNT & MAXIMUM DESIGN LOAD RANGE & SLAT SPAN RANGE

MAXIMUM DESIGN LOAD RANGE (p.s.f.)	SLAT SPAN RANGE		
	3'–0" TO 6'–6" SPACING (in)	6'–6" TO 8'–6" SPACING (in)	8'–6" TO 12'–0" SPACING (in)
≤ 30.0	4"	4"	4"
>31–40	4"	4"	4"
>41–50	4"	4"	4"
>51–60	4"	4"	4"
>61–70	4"	4"	3 3/4"

SIDE RAIL MAX. ANCHOR'S SPACING FOR BUILD-OUT MOUNT & MAXIMUM DESIGN LOAD RANGE & SLAT SPAN RANGE

REQUIRED B.O. ALUMINUM TUBE DIMENSIONS	MAXIMUM DESIGN LOAD RANGE (p.s.f.)	SLAT SPAN RANGE		
		3'–0" TO 6'–6" SPACING (in)	6'–6" TO 8'–6" SPACING (in)	8'–6" TO 12'–0" SPACING (in)
3"x2"x1/4"	≤ 30.0	4"	4"	4"
	>31–40	4"	4"	–
	>41–50	4"	4"	–
	>51–60	4"	4"	–
	>61–70	4"	4"	–
4"x2"x1/4"	≤ 30.0	4"	4"	4"
	>31–40	4"	4"	4"
	>41–50	4"	4"	–
	>51–60	4"	4"	–
	>61–70	4"	4"	–
5"x2"x1/4"	≤ 30.0	4"	4"	4"
	>31–40	4"	4"	4"
	>41–50	4"	4"	–
	>51–60	4"	4"	–
	>61–70	4"	4"	–
6"x2"x1/4"	≤ 30.0	4"	4"	4"
	>31–40	4"	4"	4"
	>41–50	4"	4"	3 3/4"
	>51–60	4"	4"	–
	>61–70	4"	4"	–
3"x3"x1/4"	≤ 30.0	4"	4"	4"
	>31–40	4"	4"	–
	>41–50	4"	4"	–
	>51–60	4"	–	–
	>61–70	4"	–	–

SCHEDULE 1: *
Vx FORCES (Lb/FT) & Vy FORCES (Lb/FT) ACTING AT JAMBS FOR A MAXIMUM DESIGN PRESSURE RATING RANGE & SLAT SPAN RANGE

MAXIMUM DESIGN LOAD RANGE (p.s.f.)	SLAT SPAN RANGE					
	3'–0" TO 6'–6"		6'–6" TO 8'–6"		8'–6" TO 12'–0"	
	Vx	Vy	Vx	Vy	Vx	Vy
≤ 30.0	137	98	357	128	839	180
>31–40	192	130	550	170	1130	240
>41–50	247	163	737	213	1413	300
>51–60	382	195	920	255	1689	360
>61–70	514	228	1100	298	1959	420

ANCHOR SPACING SCHEDULES FOR INSTALLATIONS INTO POURED CONCRETE OR GROUT FILLED CELL CONCRETE BLOCK

T.D.I. 2006

WALTER A. TILLIT Jr. P.E.
PROFESSIONAL ENGINEER

6355 N.W. 36 STREET, STE. 305
VIRGINIA GARDENS, FL 33166
PHONE (305) 871–1530 FAX (305) 871–1531

TEXAS LIC. # 90691

OPEN BACK 58mm SLAT END RETENTION BERTHA ROLL-UP SHUTTER

AMERICAN SHUTTER SYSTEMS ASSOC., INC.
4268 WESTROADS DRIVE
WEST PALM BEACH, FL. 33407
PHONE: (877)999–2772 FAX: (561)209–8380

REV. No	DESCRIPTION	DATE	REV. No	DESCRIPTION	DATE
1			3		
2			4		

DRAWN BY: F.P.

08/28/08 DATE

08–014 DRAWING No

SIDE RAIL MAX. ANCHOR'S SPACING FOR WALL MOUNT & MAXIMUM DESIGN LOAD RANGE & SLAT SPAN RANGE

MAXIMUM DESIGN LOAD RANGE (p.s.f.)	SLAT SPAN RANGE	
	3'–0" TO 6'–6" SPACING (in)	6'–6" TO 8'–6" SPACING (in)
≤ 30.0	6"	6"
>31–40	6"	6"
>41–50	6"	5"
>51–60	6"	4"

SIDE RAIL MAX. ANCHOR'S SPACING FOR INSIDE MOUNT & MAXIMUM DESIGN LOAD RANGE & SLAT SPAN RANGE

MAXIMUM DESIGN LOAD RANGE (p.s.f.)	SLAT SPAN RANGE	
	3'–0" TO 6'–6" SPACING (in)	6'–6" TO 8'–6" SPACING (in)
≤ 30.0	6"	6"
>31–40	6"	6"
>41–50	6"	6"
>51–60	6"	6"

SIDE RAIL MAX. ANCHOR'S SPACING FOR BUILD-OUT MOUNT & MAXIMUM DESIGN LOAD RANGE & SLAT SPAN RANGE

REQUIRED B.O. ALUMINUM TUBE DIMENSIONS	MAXIMUM DESIGN LOAD RANGE (p.s.f.)	SLAT SPAN RANGE	
		3'–0" TO 6'–6" SPACING (in)	6'–6" TO 8'–6" SPACING (in)
3"x2"x1/4"	≤ 30.0	6"	6"
	>31–40	6"	6"
	>41–50	6"	5"
	>51–60	6"	4"
4"x2"x1/4"	≤ 30.0	6"	6"
	>31–40	6"	6"
	>41–50	6"	5"
	>51–60	6"	4"
5"x2"x1/4"	≤ 30.0	6"	6"
	>31–40	6"	6"
	>41–50	6"	5"
	>51–60	6"	4"
6"x2"x1/4"	≤ 30.0	6"	6"
	>31–40	6"	6"
	>41–50	6"	5"
	>51–60	6"	4"
3"x3"x1/4"	≤ 30.0	6"	6"
	>31–40	6"	5 3/4"
	>41–50	6"	4"
	>51–60	6"	3 1/2"

ANCHOR SPACING SCHEDULES FOR INSTALLATIONS INTO WOOD

T.D.I. 2006

WALTER A. TILLIT Jr. P.E.
PROFESSIONAL ENGINEER

6355 N.W. 36 STREET, STE. 305
VIRGINIA GARDENS, FL 33166
PHONE (305) 871–1530 FAX (305) 871–1531

TEXAS LIC. # 90691

OPEN BACK 58mm SLAT END RETENTION
BERTHA ROLL-UP SHUTTER

AMERICAN SHUTTER SYSTEMS ASSOC., INC.
4268 WESTROADS DRIVE
WEST PALM BEACH, FL. 33407
PHONE: (877)999–2772 FAX: (561)209–8380

REV. No	DESCRIPTION	DATE	REV. No	DESCRIPTION	DATE
1			3		
2			4		

DRAWN BY: F.P.

08/28/08 DATE

08–014 DRAWING No

FLOOR TO CEILING / TRAPPED MOUNTING
END & INTERIOR MULLION MAX. SPAN (ft) SCHEDULE.
FOR A MAXIMUM DESIGN LOAD (p.s.f.), & A GIVEN MULLION SPACING (ft)*

MAXIMUM MULLION SPACING (FT) *	MAXIMUM DESIGN LOAD (p.s.f.)	MAXIMUM MULLION SPAN (FT)							
		(H) 4"x6"x1/4" MULLION **				(I) 4"x8"x1/4" MULLION **			
		ORIENTATION #1 (▭)		ORIENTATION #2 (▯)		ORIENTATION #1 (▭)		ORIENTATION #2 (▯)	
		END	INTERIOR	END	INTERIOR	END	INTERIOR	END	INTERIOR
3'–0" TO 6'–6"	30.0	12'–0"	12'–0"	12'–0"	12'–0"	12'–0"	12'–0"	12'–0"	12'–0"
	40.0	12'–0"	12'–0"	12'–0"	12'–0"	12'–0"	12'–0"	12'–0"	12'–0"
	50.0	12'–0"	11'–11"	12'–0"	12'–0"	12'–0"	12'–0"	12'–0"	12'–0"
	60.0	12'–0"	11'–2"	11'–3"	12'–0"	12'–0"	12'–0"	12'–0"	12'–0"
	70.0	11'–8"	10'–8"	10'–3"	12'–0"	12'–0"	11'–7"	11'–1"	12'–0"
6'–6" TO 8'–6"	30.0	12'–0"	12'–0"	11'–6"	12'–0"	12'–0"	12'–0"	12'–0"	12'–0"
	40.0	12'–0"	11'–9"	10'–0"	12'–0"	12'–0"	12'–0"	10'–10"	12'–0"
	50.0	10'–5"	10'–11"	9'–1"	12'–0"	12'–0"	11'–10"	9'–10"	12'–0"
	60.0	9'–5"	10'–3"	8'–5"	12'–0"	11'–1"	11'–2"	9'–2"	12'–0"
	70.0	8'–7"	9'–9"	7'–11"	12'–0"	10'–2"	10'–7"	8'–7"	12'–0"
8'–6" TO 12'–0"	30.0	10'–2"	11'–6"	8'–8"	12'–0"	12'–0"	12'–0"	9'–5"	12'–0"
	40.0	8'–9"	10'–5"	7'–10"	12'–0"	10'–4"	11'–4"	8'–6"	12'–0"
	50.0	7'–10"	9'–8"	7'–3"	12'–0"	9'–3"	10'–7"	7'–11"	12'–0"
	60.0	7'–2"	9'–2"	6'–7"	11'–4"	8'–6"	9'–11"	7'–5"	12'–0"
	70.0	6'–8"	8'–8"	6'–2"	10'–9"	7'–10"	9'–5"	7'–0"	12'–0"

WALL MOUNTING
END & INTERIOR MULLION MAX. SPAN (ft) SCHEDULE.
FOR A MAXIMUM DESIGN LOAD (p.s.f.), & A GIVEN MULLION SPACING (ft)*

MAXIMUM MULLION SPACING (FT) *	MAXIMUM DESIGN LOAD (p.s.f.)	MAXIMUM MULLION SPAN (FT)							
		(H) 4"x6"x1/4" MULLION **				(I) 4"x8"x1/4" MULLION **			
		ORIENTATION #1 (▭)		ORIENTATION #2 (▯)		ORIENTATION #1 (▭)		ORIENTATION #2 (▯)	
		END	INTERIOR	END	INTERIOR	END	INTERIOR	END	INTERIOR
3'–0" TO 6'–6"	30.0	12'–0"	12'–0"	12'–0"	12'–0"	12'–0"	12'–0"	12'–0"	12'–0"
	40.0	12'–0"	12'–0"	12'–0"	12'–0"	12'–0"	12'–0"	12'–0"	12'–0"
	50.0	12'–0"	11'–11"	12'–0"	12'–0"	12'–0"	12'–0"	12'–0"	12'–0"
	60.0	12'–0"	11'–2"	11'–3"	12'–0"	12'–0"	12'–0"	12'–0"	12'–0"
	70.0	11'–8"	10'–8"	10'–3"	12'–0"	12'–0"	11'–7"	11'–1"	12'–0"
6'–6" TO 8'–6"	30.0	12'–0"	12'–0"	11'–6"	12'–0"	12'–0"	12'–0"	12'–0"	12'–0"
	40.0	12'–0"	11'–9"	10'–0"	12'–0"	12'–0"	12'–0"	10'–10"	12'–0"
	50.0	10'–5"	10'–11"	9'–1"	12'–0"	12'–0"	11'–10"	9'–10"	12'–0"
	60.0	9'–5"	10'–3"	8'–5"	12'–0"	11'–1"	11'–2"	9'–2"	12'–0"
	70.0	8'–7"	9'–9"	7'–11"	12'–0"	10'–2"	10'–7"	8'–7"	12'–0"
8'–6" TO 12'–0"	30.0	10'–2"	11'–6"	8'–8"	12'–0"	12'–0"	12'–0"	9'–5"	12'–0"
	40.0	8'–9"	10'–5"	7'–10"	12'–0"	10'–4"	11'–4"	8'–6"	12'–0"
	50.0	7'–10"	9'–8"	7'–3"	12'–0"	9'–3"	10'–7"	7'–11"	12'–0"
	60.0	7'–2"	9'–2"	6'–7"	11'–4"	8'–6"	9'–11"	7'–5"	12'–0"
	70.0	6'–8"	8'–8"	6'–2"	10'–9"	7'–10"	9'–5"	7'–0"	12'–0"

* MAXIMUM MULLION SPACING SHALL BE SUCH THAT SLAT SPAN SHALL NOT BE EXCEEDED.

** SEE SHEETS 5, 8 & 9 FOR MULLION ORIENTATION DEFINITION.

T.D.I. 2006

WALTER A. TILLIT Jr. P.E.
PROFESSIONAL ENGINEER
6355 N.W. 36 STREET, STE. 305
VIRGINIA GARDENS, FL 33166
PHONE (305) 871–1530 FAX (305) 871–1531
TEXAS LIC. # 90691

OPEN BACK 58mm SLAT END RETENTION
BERTHA ROLL-UP SHUTTER

AMERICAN SHUTTER SYSTEMS ASSOC., INC.
4268 WESTROADS DRIVE
WEST PALM BEACH, FL. 33407
PHONE: (877)999–2772 FAX: (561)209–8380

REV. No	DESCRIPTION	DATE	REV. No	DESCRIPTION	DATE
1			3		
2			4		

DRAWN BY: F.P.
08/28/08 DATE
08–014 DRAWING No
SHEET 12 OF 12