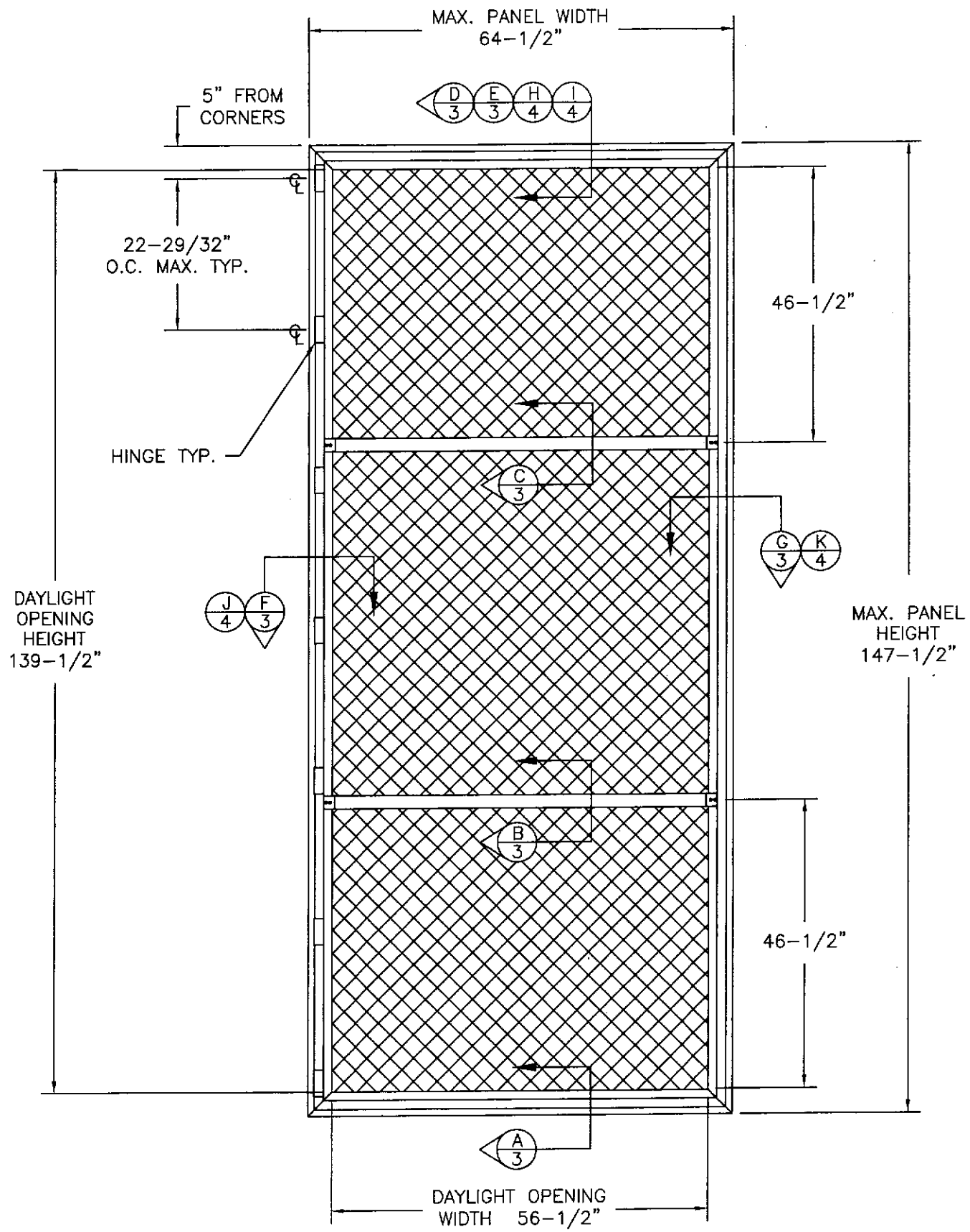

EXTERIOR ELEVATION

NOTES:

1) THE PRODUCT SHOWN HEREIN IS DESIGNED AND MANUFACTURED TO COMPLY WITH THE 2006 INTERNATIONAL BUILDING CODE (IBC) AND THE INTERNATIONAL RESIDENTIAL CODE (IRC).

2) CONCRETE, MASONRY AND WOOD FRAMING TO BE DESIGNED AND ANCHORED TO PROPERLY TRANSFER ALL LOADS TO STRUCTURE. CONCRETE, MASONRY AND WOOD FRAMING DESIGN IS THE RESPONSIBILITY OF THE ARCHITECT OR ENGINEER OF RECORD.

3) PANEL FRAME MATERIAL: ALUMINUM ALLOY 6005-T5.

4) A MINIMUM GLASS SEPARATION DISTANCE OF 1" SHALL BE PROVIDED FOR ALL INSTALLATIONS.

TABLE OF CONTENT

SHEET	DESCRIPTION
1	ELEVATION NOTES
2	ANCHORING & NOTES
3	INSTALLATION DETAILS IN CONCRETE & WOOD FRAME
4	INSTALLATION DETAILS IN CONCRETE & WOOD FRAME
5	COMPONENTS & B.O.M.

MAXIMUM ALLOWABLE DESIGN PRESSURES
+47.0 PSF -53.0 PSF

SYM	REVISION	DATE	BY
B	UPDATE TO 2006 IRC/IBC	9/23/09	SMC
A	REVISED ANCHOR LOCATIONS	11/30/08	BL

Robert J. Amoruso, P.E.
Texas No. 80817
STATE OF TEXAS
ROBERT JAMES AMORUSO
80817
LICENSED
PROFESSIONAL ENGINEER
9/23/09
PTC, LLC
535 W. Cogswell St.
Rockledge, FL 32955
TX Certificate of registration No. F-11354

FORT HURRICANE PRODUCTS, INC.
1100 25TH ST UNIT 7A
WEST PALM BEACH, FL 33407

TITLE: 280P/EGRESS OPERABLE IMPACT RESISTANT WINDOW SCREEN ELEVATION AND NOTES

PREPARED BY: PTC, LLC.
Phone 321.690.1788 Fax 321.690.1789

DRN:	DATE:
SMC	9/23/09
SCALE: NTS	DWG. NO: HSS0008
REV: B	SHEET: 1 OF 5

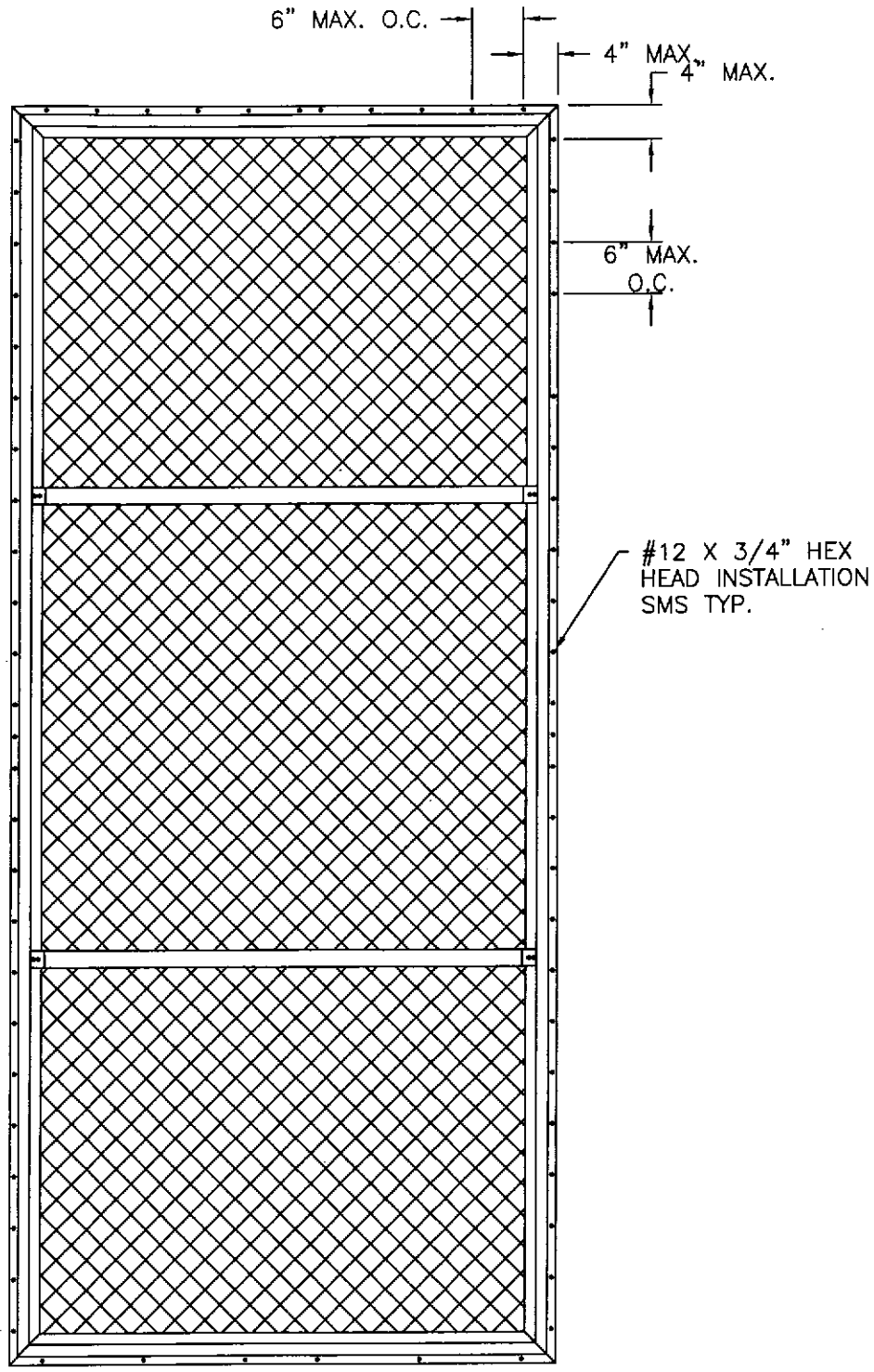

EXTERIOR ELEVATION
PANEL TO ALUMINUM
TUBE ANCHORING

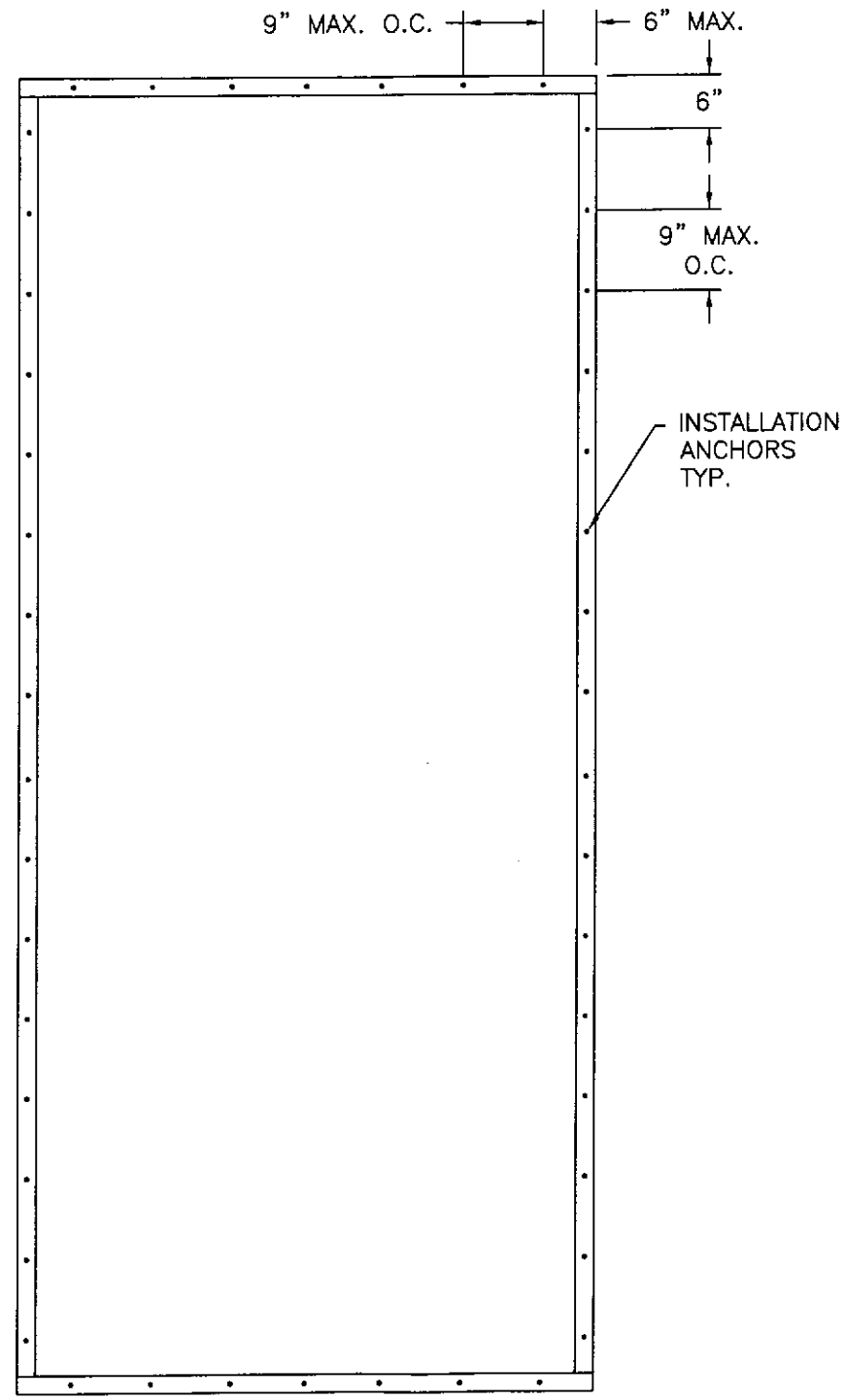

EXTERIOR ELEVATION
ALUMINUM TUBE TO
SUBSTRATE/ WALL
ANCHORING

NOTES:

1) TO INSTALL SUBFRAME TO MASONRY SUBSTRATE USE 1/4" DIA. ITW TAPCON ANCHORS OF SUFFICIENT LENGTH TO ACHIEVE A 1 1/4" MINIMUM EMBEDMENT INTO SUBSTRATE AND 1" MINIMUM EDGE DISTANCE.

2) TO INSTALL SUBFRAME TO WOOD FRAMING SUBSTRATE USE #12 WOOD SCREWS ANCHORS OF SUFFICIENT LENGTH TO ACHIEVE A 1 1/2" MINIMUM EMBEDMENT INTO SUBSTRATE AND 3/4" MINIMUM EDGE DISTANCE.

3) TO INSTALL FRAME TO SUBFRAME USE #12 X 3/4" HEX HEAD SMS.

SYM	REVISION	DATE	BY
B	UPDATE TO 2006 IRC/IBC	9/23/09	SMC
A	REVISED ANCHOR LOCATIONS	11/30/[illegible]	[illegible]

Robert J. Amoruso, P.E.
Texas No. 80817
STATE OF TEXAS
ROBERT JAMES AMORUSO
80817
LICENSED
PROFESSIONAL ENGINEER
9/24/09
PTC, LLC
1575 N. Cogswell St.
Rockledge, FL 32955
TX Certificate of Registration No. F-11354

FORT HURRICANE PRODUCTS, INC.

1100 25TH ST UNIT 7A
WEST PALM BEACH, FL 33407

TITLE: 280P/EGRESS OPERABLE IMPACT RESISTANT ANCHORING ELEVATION AND NOTES

PREPARED BY:
PTC, LLC.
Phone 321.690.1788 Fax 321.690.1789

DRN:	DATE:
SMC	9/23/09
SCALE: NTS	DWG. NO: HSS0008
REV: B	SHEET: 2 OF 5

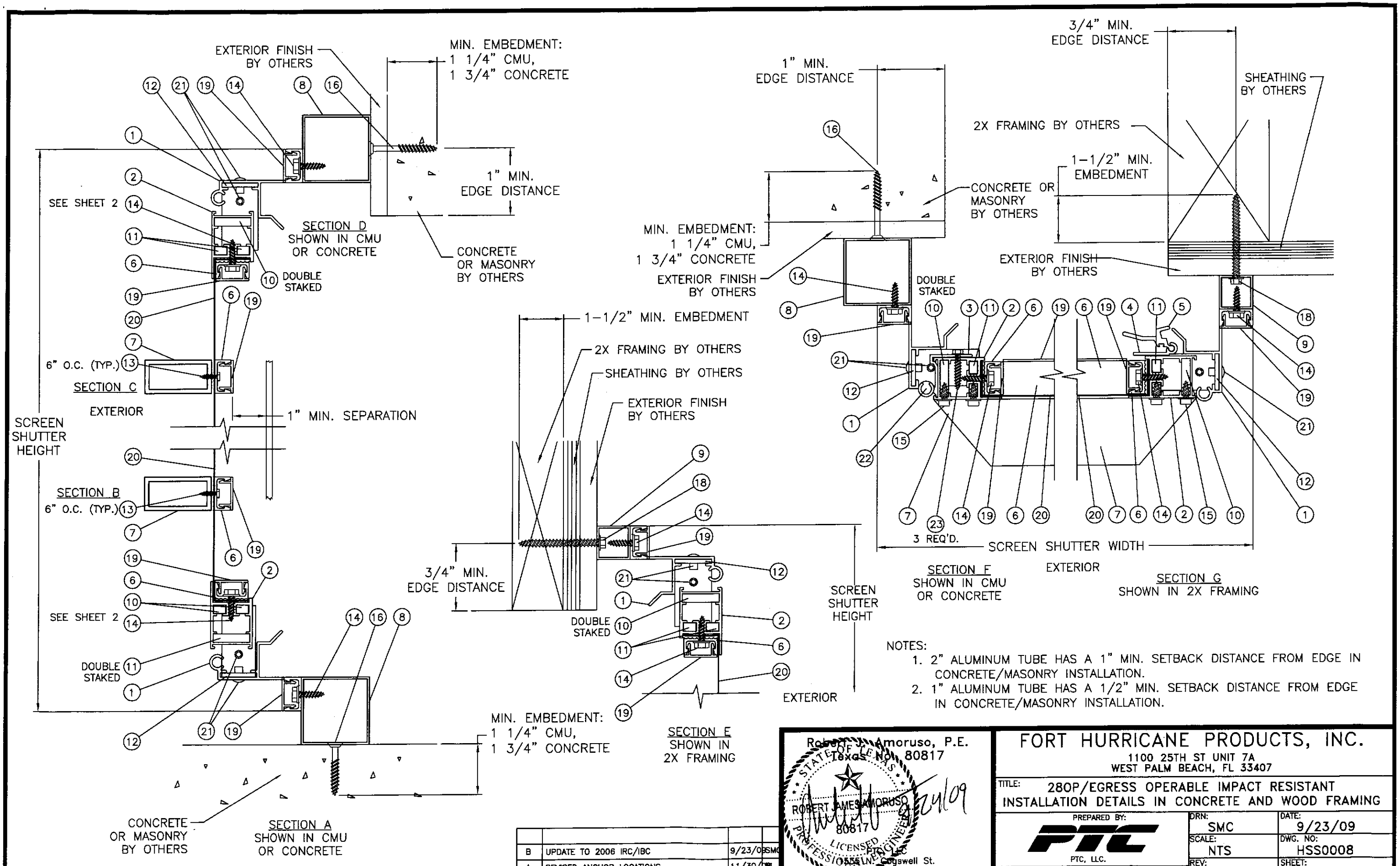

NOTES:

1. 2" ALUMINUM TUBE HAS A 1" MIN. SETBACK DISTANCE FROM EDGE IN CONCRETE/MASONRY INSTALLATION.
2. 1" ALUMINUM TUBE HAS A 1/2" MIN. SETBACK DISTANCE FROM EDGE IN CONCRETE/MASONRY INSTALLATION.

SYM	REVISION	DATE	BY
B	UPDATE TO 2006 IRC/IBC	9/23/09	SMC
A	REVISED ANCHOR LOCATIONS	11/30/09	DBL

Robert J. Amoruso, P.E.
Texas No. 80817

STATE OF TEXAS
ROBERT JAMES AMORUSO
80817
LICENSED
PROFESSIONAL ENGINEER
9/24/09

PTC, LLC
1555 N. Cogswell St.
Rockledge, FL 32955
TX Certificate of Registration No. F-11354

FORT HURRICANE PRODUCTS, INC.
1100 25TH ST UNIT 7A
WEST PALM BEACH, FL 33407

TITLE: 280P/EGRESS OPERABLE IMPACT RESISTANT INSTALLATION DETAILS IN CONCRETE AND WOOD FRAMING

PREPARED BY: PTC, LLC.
Phone 321.690.1788 Fax 321.690.1789

DRN: SMC	DATE: 9/23/09
SCALE: NTS	DWG. NO: HSS0008
REV: B	SHEET: 3 OF 5

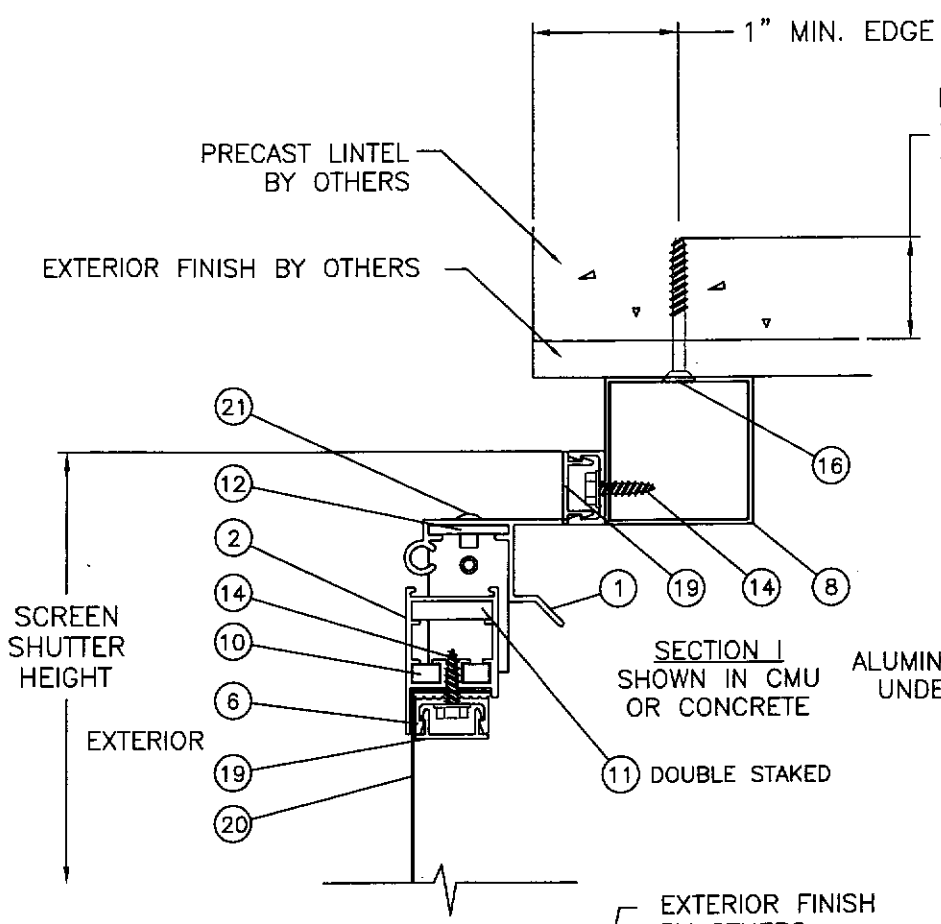

SECTION I
SHOWN IN CMU
OR CONCRETE

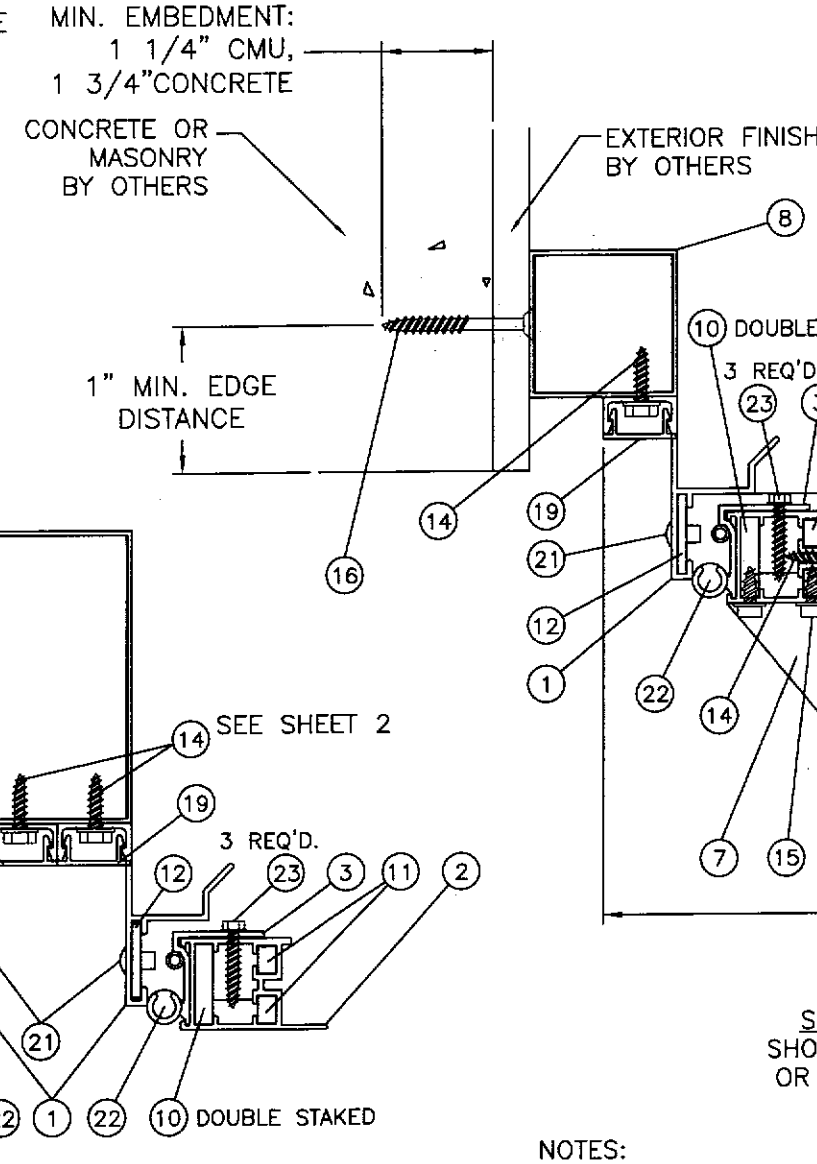

SECTION J
SHOWN IN CMU
OR CONCRETE

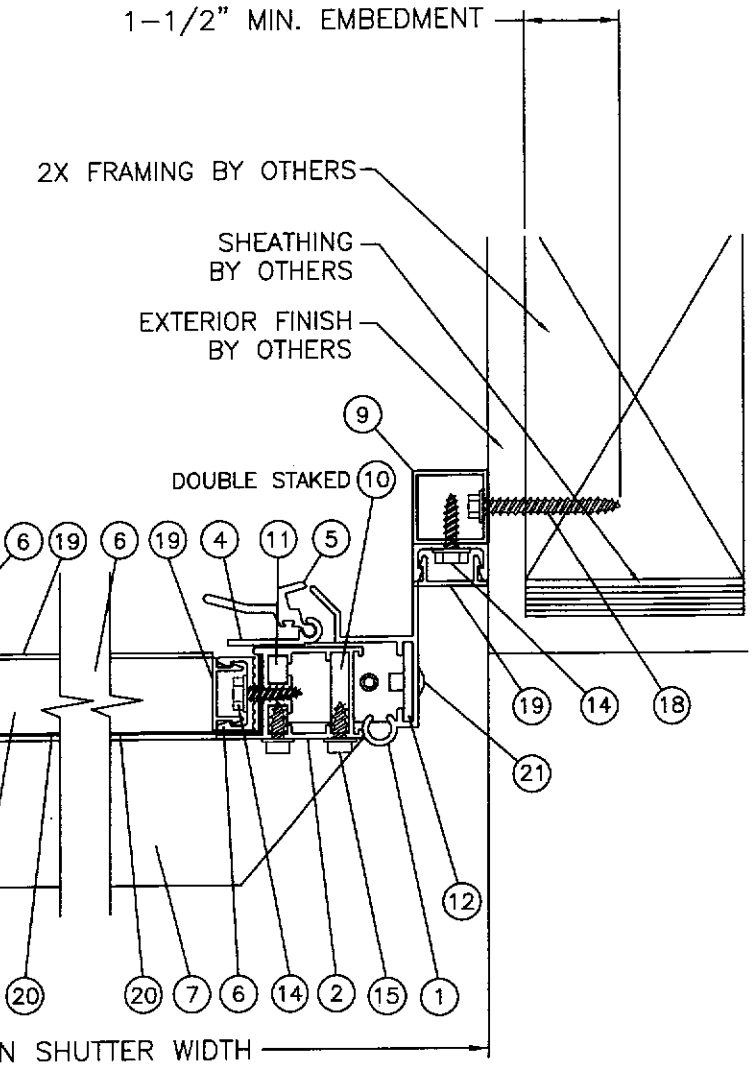

SECTION K
SHOWN IN 2X FRAMING

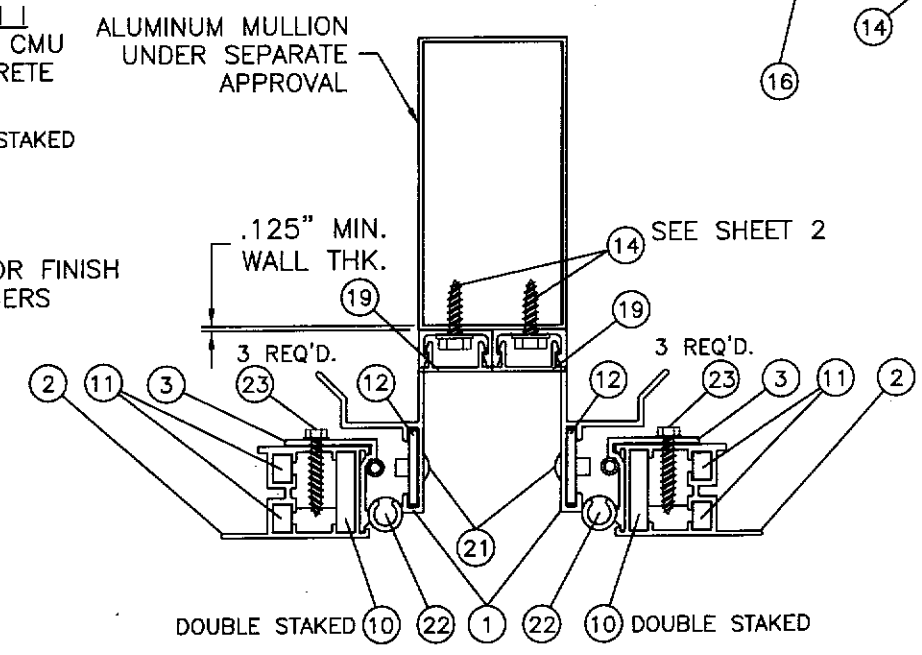

OPTIONAL ALUMINUM MULLION
INSTALLATION
MULLION UNDER SEPARATE
APPROVAL

SECTION H
SHOWN IN 2X FRAMING

NOTES:

1. 2" ALUMINUM TUBE HAS A 1" MIN. SETBACK DISTANCE FROM EDGE IN CONCRETE/MASONRY INSTALLATION.
2. 1" ALUMINUM TUBE HAS A 1 1/2" MIN. SETBACK DISTANCE FROM EDGE IN CONCRETE/MASONRY INSTALLATION.

SYM	REVISION	DATE	BY
B	UPDATE TO IRC/IBC	9/23/09	SMC
A	REVISED ANCHOR LOCATIONS	11/30/09	SMC

Robert J. Amoruso, P.E.
Texas No. 80817

STATE OF TEXAS
ROBERT JAMES AMORUSO
80817
LICENSED
PROFESSIONAL ENGINEER

10/24/09

PTC, LLC
1535 N. Cogswell St.
Rockledge, FL 32955
TX Certificate of Registration No. F-11354

FORT HURRICANE PRODUCTS, INC.
1100 25TH ST UNIT 7A
WEST PALM BEACH, FL 33407

TITLE: 280P/EGRESS OPERABLE IMPACT RESISTANT INSTALLATION DETAILS IN CONCRETE & WOOD FRAMING

PREPARED BY: PTC, LLC.
Phone 321.690.1788 Fax 321.690.1789

DRN:	DATE:
SMC	9/23/09
SCALE: NTS	DWG. NO: HSS0008
REV: B	SHEET: 4 OF 5

(1) FRAME HEAD, SILL & JAMB
TYP. WALL THICKNESS 0.075

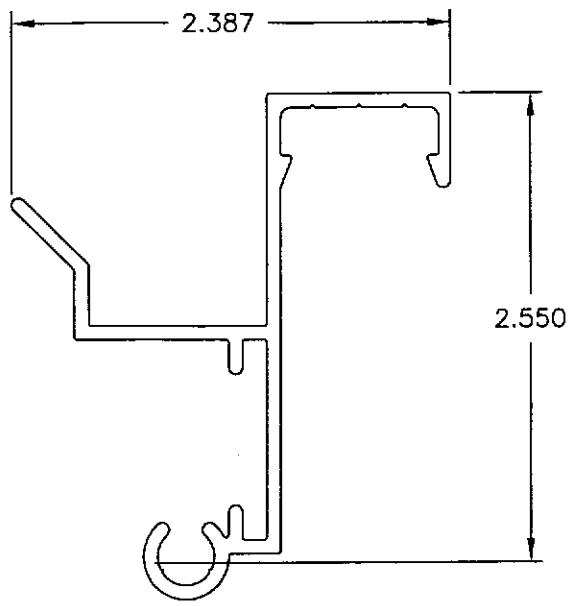

(2) VENT HEAD, SILL & JAMB
TYP. WALL ----
6005-T6
NO ALLOY OR
TEMPER SPECIFIED

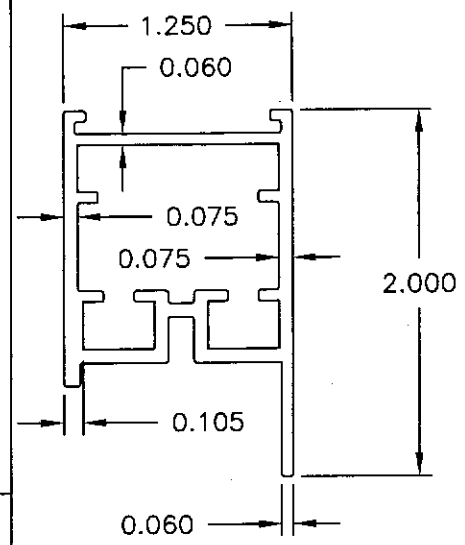

(3) SCREEN HINGE
TYP. WALL
THICKNESS 0.078
6005-T6

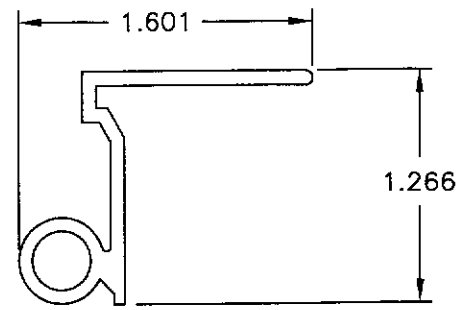

(4) SCREEN LOCK PART A
TYP. WALL
THICKNESS 0.078

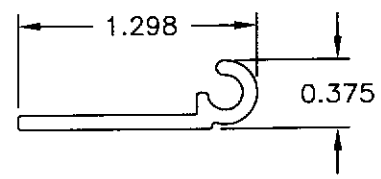

(5) SCREEN LOCK PART B

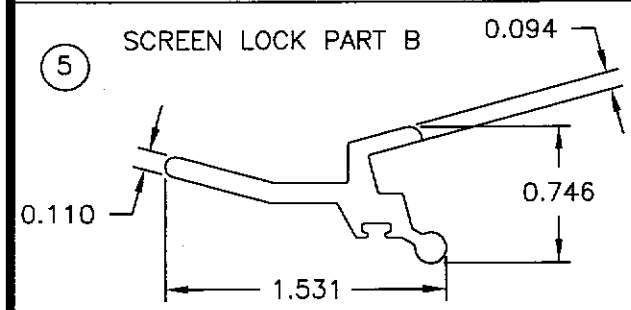

(6) WIRE RETAINER
TYP. WALL THICKNESS 0.075
NO ALLOY & TEMPER SPECIFIED

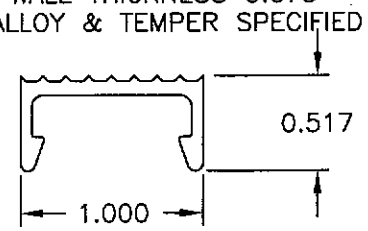

(7) 1" X 2" ALUMINUM TUBE
TYP. WALL THICKNESS 0.125

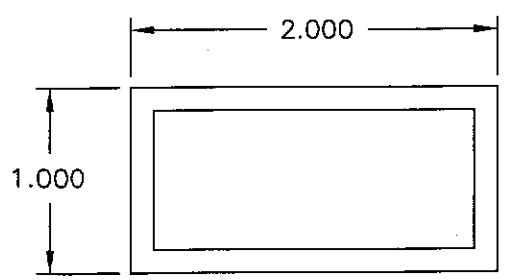

(8) 2" X 2" ALUMINUM TUBE
TYP. WALL THICKNESS 0.062

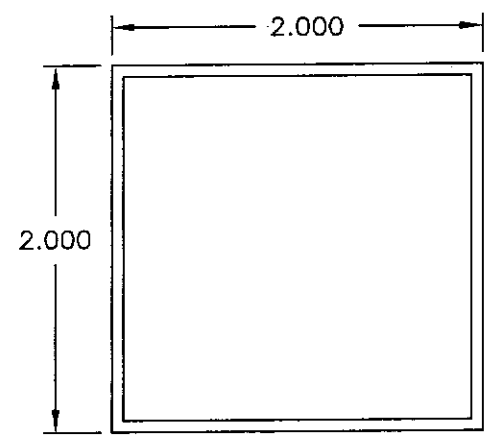

(9) 1" X 1" ALUMINUM TUBE
TYP. WALL
THICKNESS 0.062

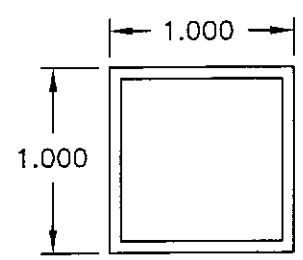

(19) SCREEN COVER
TYP. WALL
THICKNESS 0.050

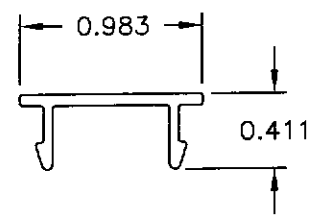

BILL OF MATERIALS

ITEM #	PART #	DESCRIPTION
1	2726	FRAME HEAD, SILL & JAMB 6006-T6 ALUMINUM
2	2711	VENT HEAD, SILL & STILE 6005-T6 ALUMINUM
3	2733	SCREEN HINGE
4	2724	SNAP LOCK PART A
5	2725	SNAP LOCK PART B
6	2721	WIRE RETAINER
7		1" X 2" X 1/8" ALUMINUM TUBE
8		2" X 2" X 1/16" ALUMINUM TUBE
9		1" X 1" & 1" X 2" X 1/16" ALUMINUM TUBE
10		OUTER VENT CORNER KEY 2" X 2" X 1.1 X 1/4"
11		INNER VENT CORNER KEY 2" X 2" X .400 X 1/8"
12		SUB FRAME ANGLE CORNER KEY 2" X 2" X 1/8"
13		#10 X 5/8" TEK SCREW
14		#12 -14 X 3/4" HEX HEAD SMS
15		#14 X 1/2" HEX HEAD SELF TAPPING FASTENER
16		1/4" X 2-1/4" ITW TAPCON
17		NOT USED
18		#12 WOOD SCREW
19	2730	SCREW COVER
20		MESH 12 X 12 SCREEN SS 304 THREAD 0.028" OR 0.032" THICK
21		1/8" POP RIVET
22		SPRING LOADED HINGE PIN ASSEMBLY
23		#12 X 1" HEX HEAD SELF TAPPING SMS

SYM	REVISION	DATE	BY
B	UPDATE TO 2006 IRC/IBC	9/23/09	SMC
A	REVISED ANCHOR LOCATIONS	11/30/[illegible]	[illegible]

Robert J. Amoruso, P.E.
Texas No. 80817
STATE OF TEXAS
ROBERT JAMES AMORUSO
80817
LICENSED
PROFESSIONAL ENGINEER
9/24/09
1535 NE Caswell St.
Rockledge, FL 32955
TX Certificate of Registration No. F-11354

FORT HURRICANE PRODUCTS, INC.

1100 25TH ST UNIT 7A
WEST PALM BEACH, FL 33407

TITLE: 280P/EGRESS OPERABLE IMPACT RESISTANT COMPONENTS AND B.O.M.

PREPARED BY: PTC, LLC.
Phone 321.690.1788 Fax 321.690.1789

DRN:	DATE:
SMC	9/23/09
SCALE: NTS	DWG. NO: HSS0008
REV: B	SHEET: 5 OF 5