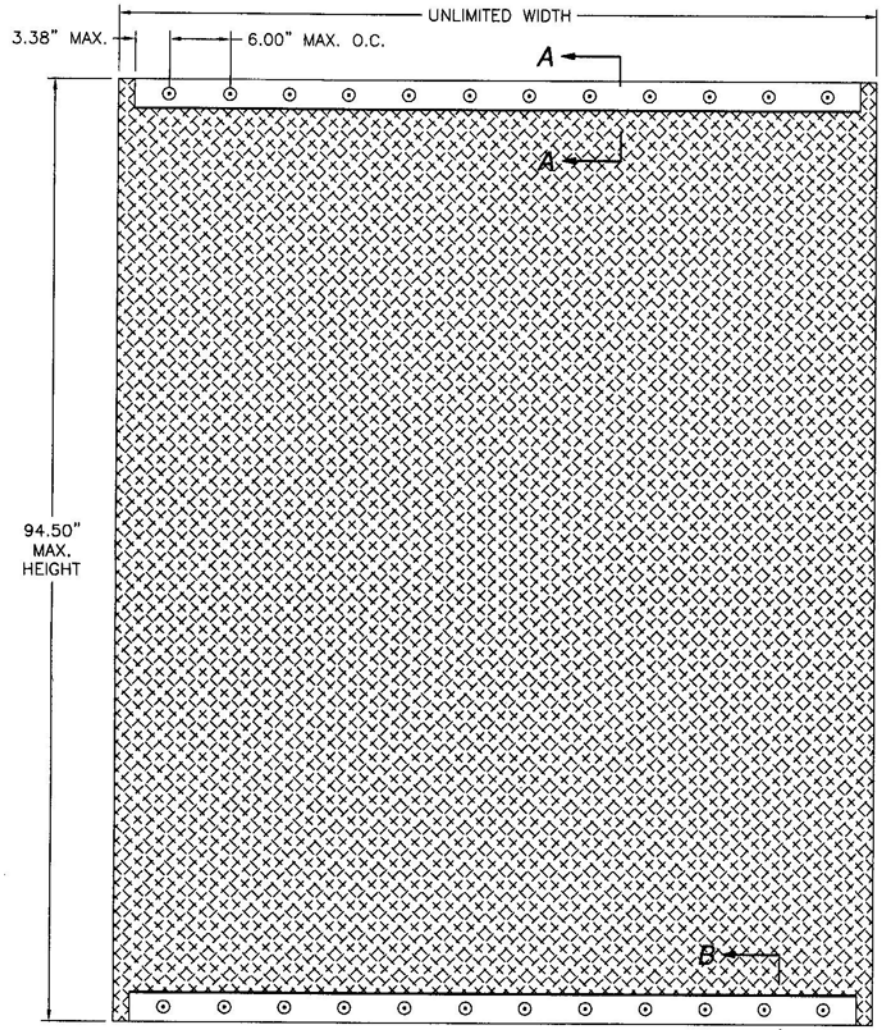

SECURITY SHIELD
VERTICAL INSTALLATION
EXTERIOR VIEW

DESIGN PRESSURE RATING
±70.0 PSF

LARGE MISSILE IMPACT RESISTANT

REVISIONS			
REV	DESCRIPTION	DATE	APPROVED
A	REVISED DESIGN PRESSURE AND MAX DIM	11/28/07	R.L.
B	REVISED SECTION LETTERS ON SHEET 2	2/28/08	R.L.

NOTES:

1) THE PRODUCT SHOWN HEREIN IS DESIGNED AND MANUFACTURED TO COMPLY WITH THE 2006 IBC AND THE 2006 IRC.
2) WOOD FRAMING AND MASONRY OPENING TO BE DESIGNED AND ANCHORED TO PROPERLY TRANSFER ALL LOADS TO STRUCTURE. FRAMING AND MASONRY OPENING IS THE RESPONSIBILITY OF THE ARCHITECT OR ENGINEER OF RECORD.
3) CONTRACTOR IS RESPONSIBLE FOR MAINTAINING STRUCTURAL INTEGRITY OF WINDOW OPENING AND ALL WOOD FRAMING AROUND WINDOW.
4) ALL EXTRUSIONS ARE 6063–T5 ALUMINUM ALLOY, UNLESS OTHERWISE NOTED.
5) ALL FASTENERS, NUTS AND WASHERS SHALL BE GALVANIZED OR STAINLESS STEEL WITH A MINIMUM TENSILE STRENGTH OF 60KSI.
6) APPLICABLE TEST REPORT: HTL 0432–0115–07
7) REFER TO ANCHOR DETAILS FOR ANCHOR TYPE, SUBSTRATE TYPE, EDGE DISTANCE AND MINIMUM EMBEDMENT.
8) FOR MINIMUM REQUIRED SEPARATION BETWEEN PRODUCT AND EXISTING GLASS SEE INSTALLATION DETAILS.
9) FABRIC MATERIAL TO BE ARAMID FIBER AND STAINLESS STEEL 520 X 390 STRANDS PER SQUARE METER AND 27% OPEN AREA. POSITION MESH WITH THE UNCRIMPED WOVEN STRAND RUNNING ANCHOR EDGE TO ANCHOR EDGE.
10) OPERATION OF ROLLUP MECHANISM IS NOT PART OF THIS APPROVAL. CARE SHOULD BE TAKEN WHEN SECURITY SHIELD IS IN MOTION TO ENSURE THAT PERSONAL INJURY OR DAMAGE TO THIS PRODUCT DOES NOT OCCUR.
11) FOR OPTIONAL ANCHOR TYPES AND MAXIMUM DESIGN PRESSURES BASED ON ANCHOR CAPACITY REFER TO SHEET 2.

TABLE OF CONTENTS

SHEET NO.	DESCRIPTION
1	VERTICAL ELEVATION ANCHORING AND GENERAL NOTES
2	HORIZONTAL ELEVATION AND ANCHORING
2 – 4	INSTALLATION DETAILS
5	COMPONENTS

USA SHUTTER COMPANY LLC
1455 RAIL HEAD BLVD, UNIT 6
NAPLES, FL 34110

MAESTROSHIELD MAESTRAN SECURITY SHIELD
VERTICAL ELEVATION, ANCHORING AND NOTES

DRAWN: R.L.	DWG NO. FL 00106	REV B
SCALE NTS	DATE 4/09/07	SHEET 1 OF 5

Luis R. Lomas P.E.
Florida No. 62514

REVISIONS			
REV	DESCRIPTION	DATE	APPROVED
A	REVISED DESIGN PRESSURE AND MAX DIM	11/28/07	R.L.
B	REVISED SECTION LETTERS ON SHEET 2	2/28/08	R.L.

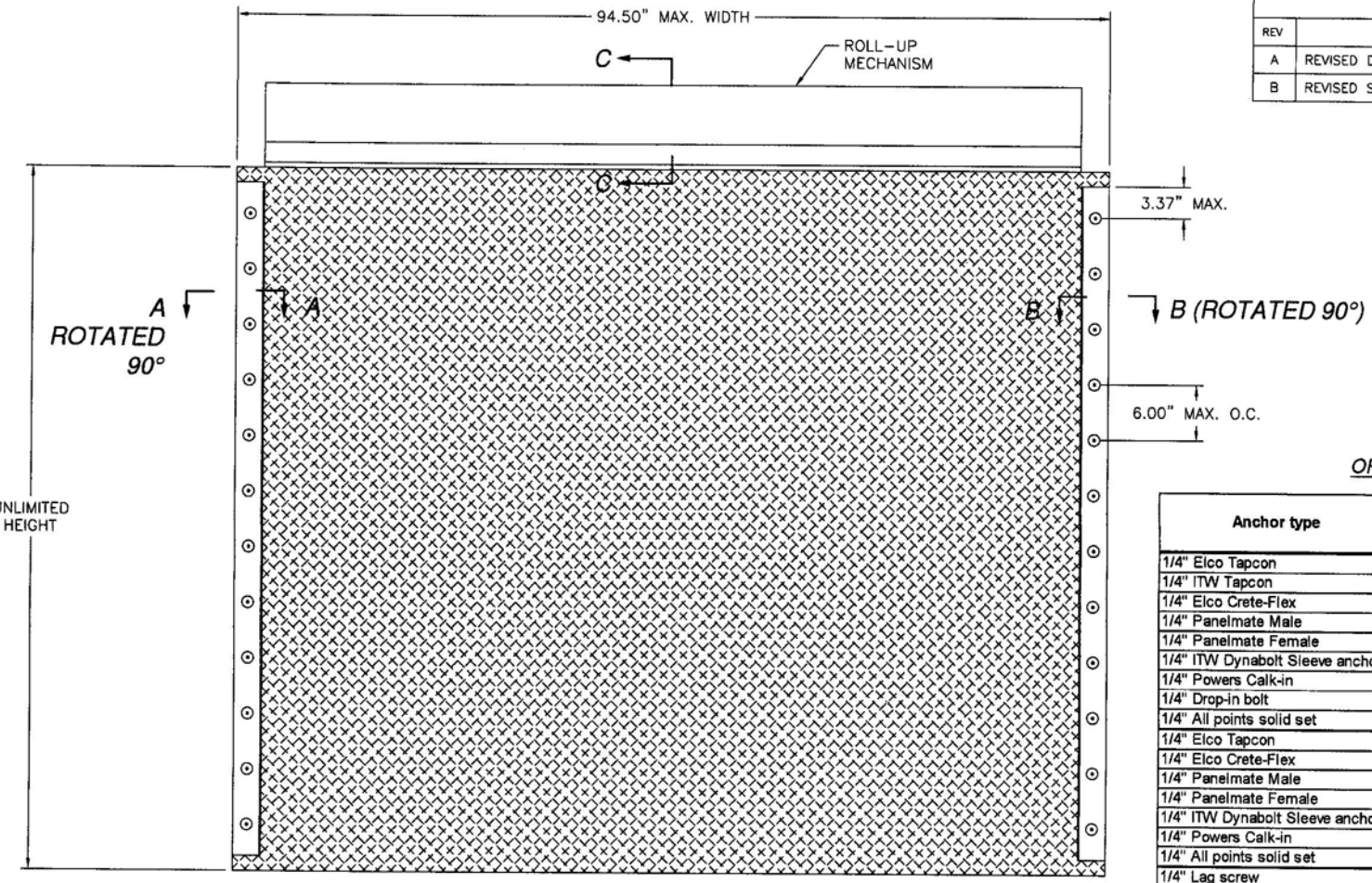

OPTIONAL ANCHORS CHART

Anchor type	Substrate	Min. emb. (in)	Min. edge distance (in)	Max. O.C. (in)	Max. Design pressure
1/4" Elco Tapcon	Concrete 3,000 psi min.	1.75	2.50	6.00	70.0
1/4" ITW Tapcon		1.75	2.50	6.00	70.0
1/4" Elco Crete-Flex		1.75	1.75	6.00	70.0
1/4" Panelmate Male		1.75	2.50	6.00	70.0
1/4" Panelmate Female		1.75	2.50	6.00	70.0
1/4" ITW Dynabolt Sleeve anchor		1.13	1.50	6.00	70.0
1/4" Powers Calk-in		0.88	3.00	6.00	70.0
1/4" Drop-in bolt		1.00	3.50	6.00	70.0
1/4" All points solid set		0.88	3.00	6.00	70.0
1/4" Elco Tapcon	Hollow block	1.25	2.50	6.00	70.0
1/4" Elco Crete-Flex		1.25	2.50	6.00	70.0
1/4" Panelmate Male		1.25	2.00	6.00	70.0
1/4" Panelmate Female		1.25	3.00	6.00	70.0
1/4" ITW Dynabolt Sleeve anchor		1.13	1.50	6.00	70.0
1/4" Powers Calk-in		0.88	3.00	6.00	70.0
1/4" All points solid set		0.88	3.00	6.00	70.0
1/4" Lag screw	Wood .53 min. specific gravity	2.00	0.75	6.00	70.0
#14 Wood screw		2.88	0.75	6.00	70.0
1/4" Panelmate Male		1.88	0.75	6.00	70.0
1/4" Panelmate Female		1.88	0.75	6.00	70.0

SECURITY SHIELD
HORIZONTAL INSTALLATION
EXTERIOR VIEW

DESIGN PRESSURE RATING
±70.0 PSF

LARGE MISSILE IMPACT RESISTANT

USA SHUTTER COMPANY LLC
1455 RAIL HEAD BLVD, UNIT 6
NAPLES, FL 34110

MAESTROSHIELD MAESTRAN SECURITY SHIELD
HORIZONTAL ELEVATION AND ANCHOR CHARTS

DRAWN: R.L.	DWG NO. FL 00106	REV B
SCALE NTS	DATE 4/08/07	SHEET 2 OF 5

Luis R. Lomas P.E.
Florida No. 62514

REVISIONS			
REV	DESCRIPTION	DATE	APPROVED
A	REVISED DESIGN PRESSURE AND MAX DIM	11/28/07	R.L.
B	REVISED SECTION LETTERS ON SHEET 2	2/28/08	R.L.

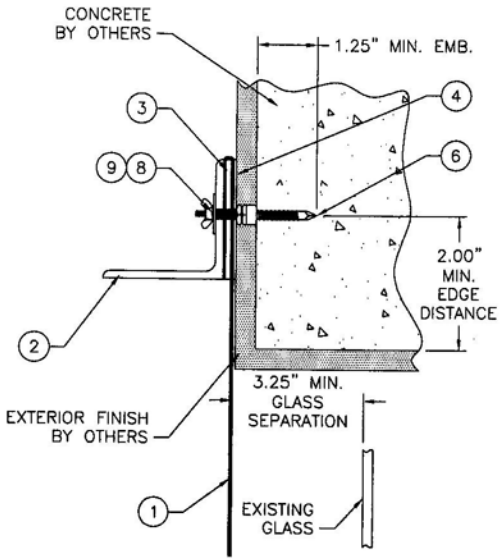

SECTION A-A
CONCRETE INSTALLATION

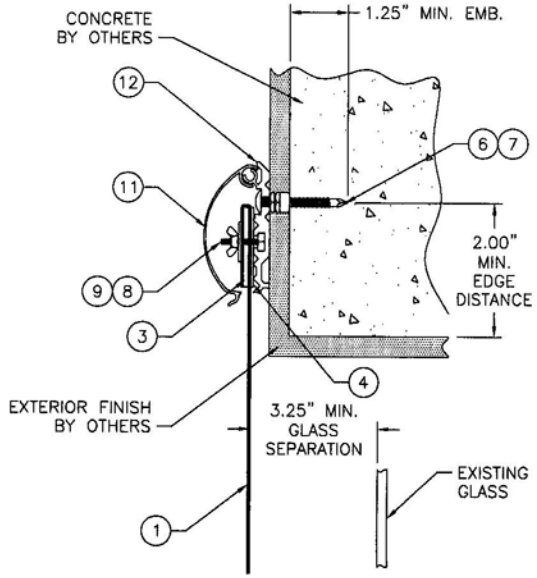

SECTION A-A
SECTION D-D ROTATED 90° CW
CONCRETE INSTALLATION WITH DECORATIVE COVER AND BASE

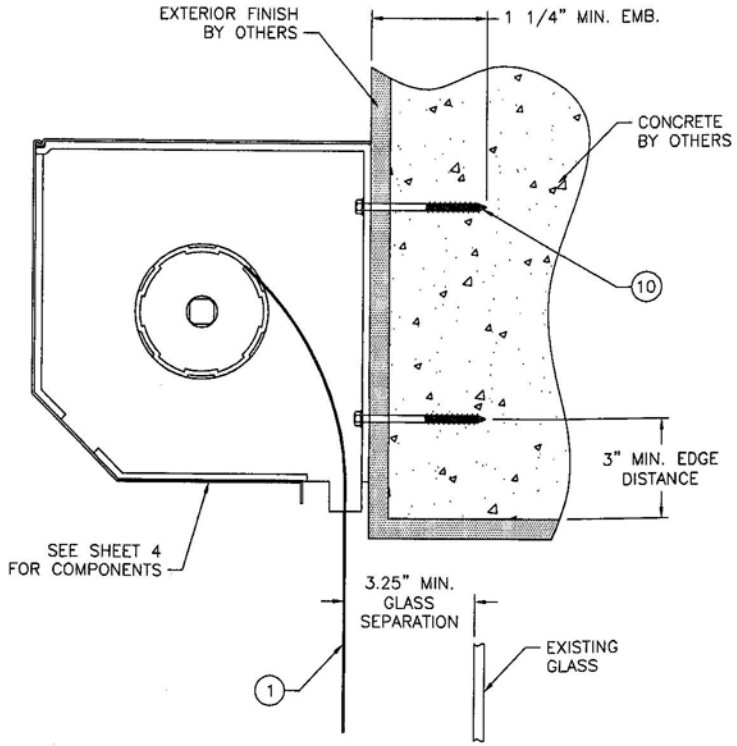

SECTION C-C
CONCRETE INSTALLATION
ROLL-UP MECHANISM

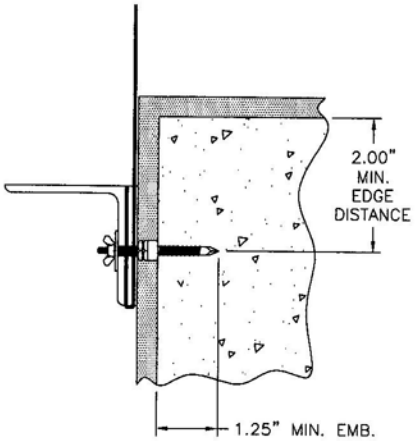

SECTION B-B
CONCRETE INSTALLATION

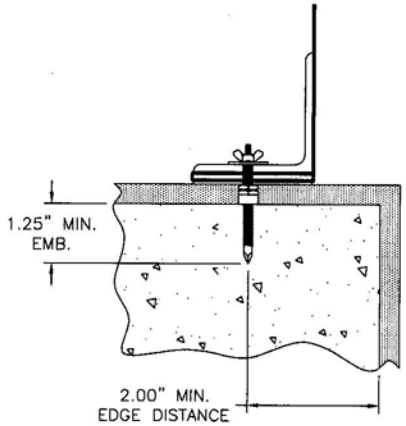

SECTION B-B
CONCRETE INSTALLATION
(OPTIONAL)

USA SHUTTER COMPANY LLC
1455 RAIL HEAD BLVD, UNIT 6
NAPLES, FL 34110

MAESTROSHIELD MAESTRAN SECURITY SHIELD
INSTALLATION DETAILS

DRAWN: R.L.	DWG NO. FL 00106	REV B
SCALE NTS	DATE 4/09/07	SHEET 3 OF 5

Luis R. Lomas P.E.
Florida No. 62514

REVISIONS			
REV	DESCRIPTION	DATE	APPROVED
A	REVISED DESIGN PRESSURE AND MAX DIM	11/28/07	R.L.
B	REVISED SECTION LETTERS ON SHEET 2	2/28/08	R.L.

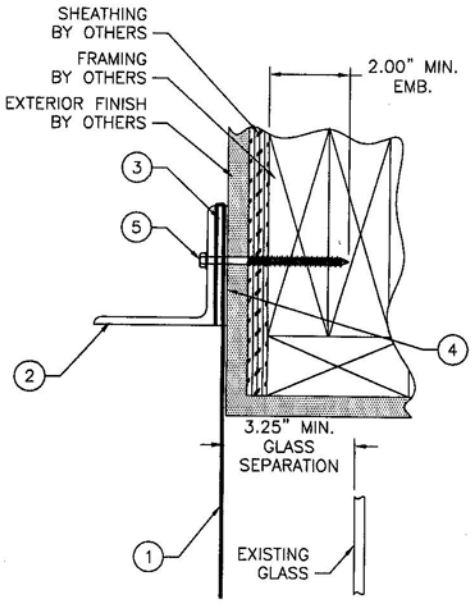

SECTION A-A

FRAMING INSTALLATION
THIS IS A PERMANENT INSTALLATION

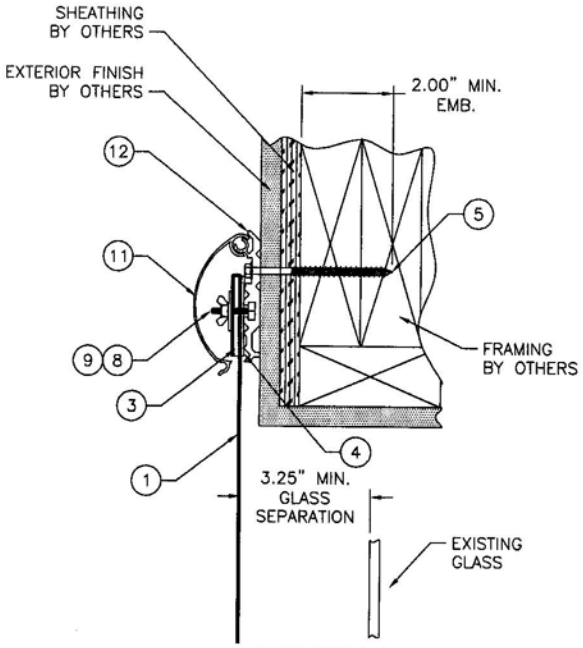

SECTION A-A
SECTION D-D ROTATED 90° CW

FRAMING INSTALLATION WITH DECORATIVE COVER AND BASE

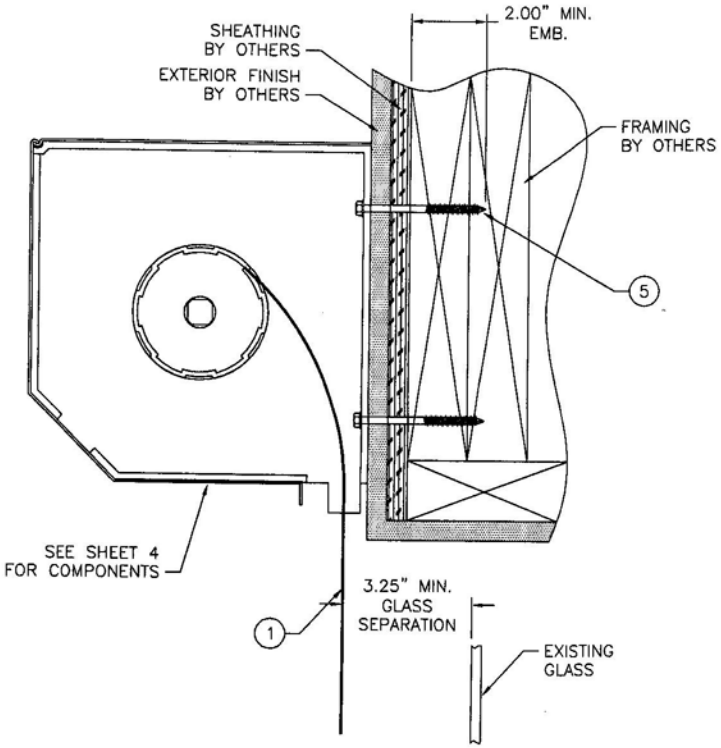

SECTION A-A

FRAMING INSTALLATION
ROLL-UP MECHANISM

USA SHUTTER COMPANY LLC
1455 RAIL HEAD BLVD, UNIT 6
NAPLES, FL 34110

MAESTROSHIELD MAESTRAN SECURITY SHIELD
INSTALLATION DETAILS

DRAWN: R.L.	DWG NO. FL 00106	REV B
SCALE NTS	DATE 4/09/07	SHEET 4 OF 5

Luis R. Lomas P.E.
Florida No. 52514
2/28/08

PARTS LIST		
NO.	PART NUMBER	DESCRIPTION
1		MESH
2		ANGLE BRACKET (6061-T6 ALUMINUM)
3		MESH BASE SUPPORT (6061-T6 ALUMINUM)
4		RUBBER STRIP (BUNA-N RUBBER)
5		1/4" X 3 1/2" LAG SCREW
6		PANELMATE FEMALE
7		1/4-20 SIDEWALK BOLT
8		1/4-20 x 1" HH BOLT
9		1/4-20 WASHERED WINGNUT
10		1/4" TAPCON
11		RETENTION DECORATIVE COVER
12		RETENTION DECORATIVE BASE
13		HOOD, ALUMINUM
14		HOOD FRONT, ALUMINUM
15		BRACKET RIGHT, ALUMINUM
16		MOTOR TUBE, ALUMINUM
17		MOTOR
18		BRACKET LEFT, ALUMINUM
19		MOTOR MOUNT NUTS
20		BEARING HOUSING, ALUMINUM

REVISIONS			
REV	DESCRIPTION	DATE	APPROVED
A	REVISED DESIGN PRESSURE AND MAX DIM	11/28/07	R.L.
B	REVISED SECTION LETTERS ON SHEET 2	2/28/08	R.L.

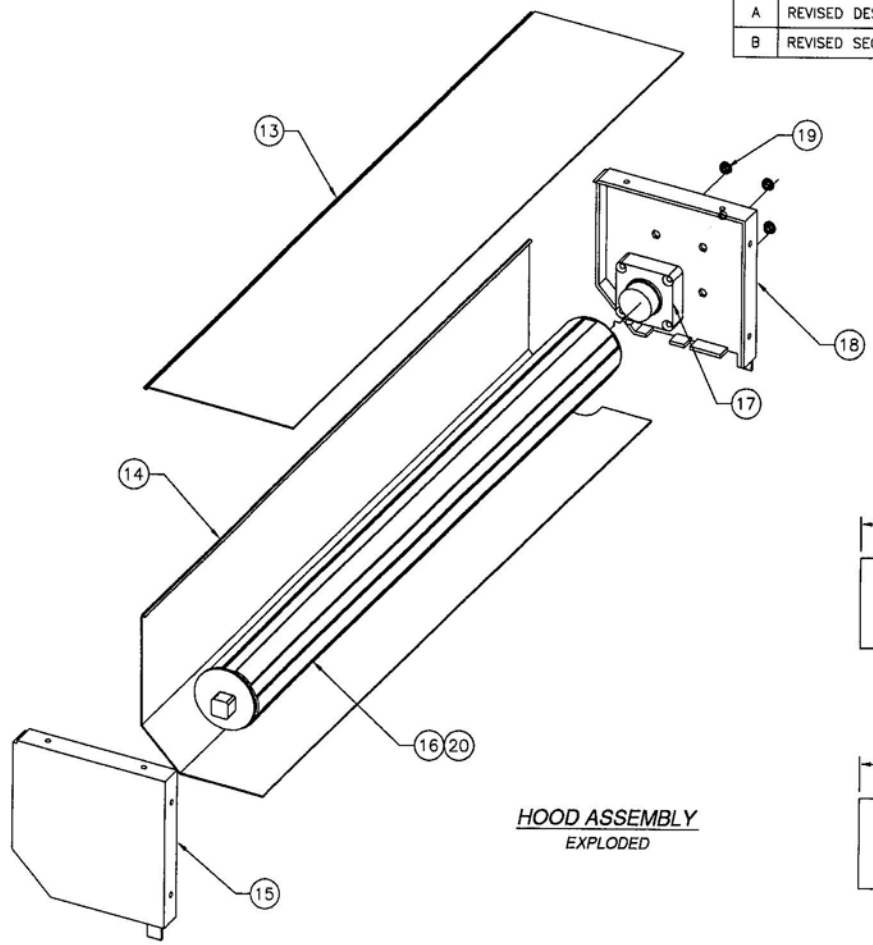

HOOD ASSEMBLY
EXPLODED

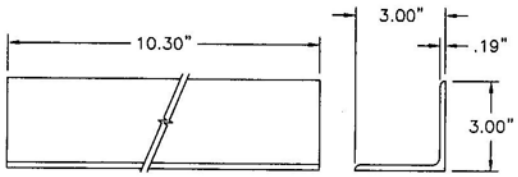

(2) ANGLE BRACKET
ALUMINUM

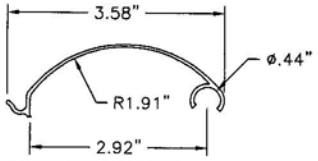

(11) RETENTION DECORATIVE COVER
ALUMINUM

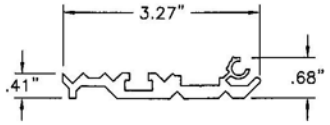

(12) RETENTION DECORATIVE BASE
ALUMINUM

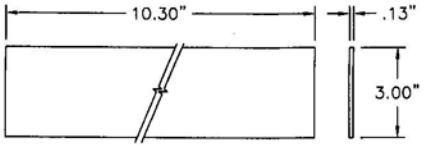

(3) MESH BASE SUPPORT
ALUMINUM

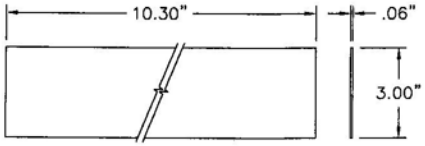

(4) RUBBER STRIP
RUBBER

USA SHUTTER COMPANY LLC
1455 RAIL HEAD BLVD, UNIT 6
NAPLES, FL 34110

MAESTROSHIELD MAESTRAN SECURITY SHIELD COMPONENTS

DRAWN: R.L.	DWG NO. FL 00106	REV B
SCALE NTS	DATE 4/09/07	SHEET 5 OF 5

2/28/08
Luis R. Lomas P.E.
Florida No. 62514