PREPARED FOR:

Cat 5 Hurricane Screens, LLC

13484 Chambord St.

Brooksville, Florida 34613

PROJECT:

ANCHOR CALCULATIONS (Revised)

FOR 78" x 120"

WIND ABATEMENT SYSTEM

GEOTEXTILE FABRIC STORM

PROTECTION SCREEN

SERIES:

PROJECT NO.: 307-0751

REPORT NO.: 837

DATE: 10/31/2007

CERTIFICATION OF INDEPENDENCE:

PTC, LLC and Douglas J. McDougall, P.E., do not have, nor will acquire:

1) A financial interest in any company manufacturing or distributing products for which this report is being issued.
2) A financial interest in any other entity involved in the approval process of the product.

Prepared by:

PTC, LLC

1535 N. Cogswell St. Suite C 25

Rockledge, Fl 32955

Phone: (321) 690-1788

Fax: (321) 690-1789

Douglas J. McDougall P.E.
Florida No. 28392
11/1/2007

Florida Board of Professional Engineers
Certificate of Authorization No. 25935

PTC, LLC
Rockledge, Fl 32955
Phone: (321) 690-1788

Client: Cat 5 Hurricane Screens, LLC
Project #: 307-0751
Report #: 837

Prepared by: D.J.McDougall
Date: 10/31/2007

Testing battery

Specimen Number	Size Tested	Configuration Tested	Applicable Test Report	Uniform Pressures ASTM E330-02			Cyclic Pressures ASTME-1886			Glass Type
1	78" x 120"	X		+	135	psf		-		N/A
				-	135	psf		-		
2	78" x 120"	X			-		+	90	psf	N/A
					-		-	90	psf	
3	78" x 120"	X			-		+	90	psf	N/A
					-		-	90	psf	
4	78" x 120"	X			-		+	90	psf	N/A
					-		-	90	psf	

Maximum Design Pressure Capacity: ± 90.0 psf

SCOPE:
Contained herein are anchor calculations.

Anchor calculations:

Installation anchor calculations, contained herein, were performed based on tested design pressures where bending is not considered.

Anchors to be qualified:

1. 1/4" Panel Mate, for installation in masonry and wood frame substrates.
2. 1/4" Tapcon SG, for installation in masonry and wood frame substrates.
3. 1/4" Tapcon TVAS, for installation in masonry and wood frame substrates.
4. 1/4" Panel Mate insert, for installation in masonry and wood substrates.
5. 3/8" Dynaset drop in anchor, for installation in masonry substrates.

Anchors capacity - withdrawal:

Type: Elco 1/4" Panel mate - male or female
Substrate: SYP
Allowable Design Value: W = 2632 lbs
Safety factor: 4
Edge distance factor: 1.00
Embedment factor: 1.00
Adjusted Design Value: W' = 658 lbs/anchor

Required min. edge distance: 0.75 in
Installation edge distance: 0.75 in
Required min. embedment: 1.88 in
Installation embedment: 1.88 in

Type: Elco 1/4" Panel mate - male or female
Substrate: Concrete block
Allowable Design Value: W = 1091 lbs
Safety factor: 4
Edge distance factor: 1.00
Embedment factor: 1.00
Adjusted Design Value: W' = 273 lbs/anchor

Required min. edge distance: 2.00 in
Installation edge distance: 2.50 in
Required min. embedment: 1.25 in
Installation embedment: 1.88 in

Douglas J. McDougall P.E.
Florida No. 28392
11/1/2007

Florida Board of Professional Engineers
Certificate of Authorization No. 25935

PTC, LLC
Rockledge, Fl 32955
Phone: (321) 690-1788

Client: Cat 5 Hurricane Screens, LLC
Project #: 307-0751
Report #: 837

Prepared by: D.J.McDougall
Date: 10/31/2007

Type: Elco 1/4" Panel mate - male or female

Substrate:	Concrete - 3323 psi		Required min. edge distance:	2.50 in
Ultimate Value:	W =	2176 lbs	Installation edge distance:	2.50 in
Safety factor:		4	Required min. embedment:	1.75 in
Edge distance factor:		1.00	Installation embedment:	1.88 in
Embedment factor:		1.00		
Adjusted Design Value:	**W' =**	**544 lbs/anchor**		

Type: 1/4" Tapcon SG

Substrate:	Wood SYP		Required min. edge distance:	0.75 in
Withdrawal design value:	W =	3589 lbs	Installation edge distance:	0.75 in
Safety factor:		4	Required min. embedment:	1.50 in
Edge distance factor:		1.00 in	Installation embedment:	1.88 in
Allowable Design Value:	**W' =**	**897 lbs/anchor**		

Type: 1/4" Tapcon SG

Substrate:	Concrete block		Required min. edge distance:	2.50 in
Allowable Design Value:	W =	1940 lbs	Installation edge distance:	2.50 in
Safety factor:		4	Required min. embedment:	1.25 in
Edge distance factor:		1.00	Installation embedment:	1.88 in
Embedment factor:		1.00		
Adjusted Design Value:	**W' =**	**485 lbs/anchor**		

Type: 1/4" Tapcon SG

Substrate:	Concrete 3295 psi		Required min. edge distance:	1.25 in
Allowable Design Value:	W =	2704 lbs	Installation edge distance:	2.50 in
Safety factor:		4	Required min. embedment:	1.75 in
Edge distance factor:		1.00	Installation embedment:	1.88 in
Embedment factor:		1.00		
Adjusted Design Value:	**W' =**	**676 lbs/anchor**		

Type: 1/4" Panel Mate Insert

Substrate:	Wood SYP		Required min. edge distance:	0.75 in
Allowable Design Value:	W =	1396 lbs	Installation edge distance:	0.75 in
Safety factor:		4	Required min. embedment:	1.63 in
Edge distance factor:		1.00	Installation embedment:	1.88 in
Embedment factor:		1.00		
Adjusted Design Value:	**W' =**	**349 lbs/anchor**		

Douglas J. McDougall P.E.
Florida No. 28392
11/1/2007

Florida Board of Professional Engineers
Certificate of Authorization No. 25935

PTC, LLC
Rockledge, Fl 32955
Phone: (321) 690-1788

Client: Cat 5 Hurricane Screens, LLC
Project #: 307-0751
Report #: 837

Prepared by: D.J.McDougall
Date: 10/31/2007

Type: 1/4" Panel Mate Insert
Substrate: Concrete block
Allowable Design Value: W = 1376 lbs
Safety factor: 4
Edge distance factor: 1.00
Embedment factor: 1.00
Adjusted Design Value: W' = 344 lbs/anchor

Required min. edge distance: 1.75 in
Installation edge distance: 2.50 in
Required min. embedment: 1.25 in
Installation embedment: 1.88 in

Type: 1/4" Panel Mate Insert
Substrate: Concrete 2700 PSI
Allowable Design Value: W = 2342 lbs
Safety factor: 4
Edge distance factor: 0.63
Embedment factor: 1.00
Adjusted Design Value: W' = 366 lbs/anchor

Required min. edge distance: 4.00 in
Installation edge distance: 2.50 in
Required min. embedment: 1.63 in
Installation embedment: 1.88 in

Fastener type: Textron 1/4" Panel mate TVAS
Substrate: Wood SYP
Ultimate Value: W = 2756 lbs
Safety factor: 4
Edge distance factor: 1.00
Embedment factor: 0.94
Adjusted Design Value: W' = 646 lbs/anchor

Required min. edge distance: 0.75 in
Installation edge distance: 1.63 in
Required min. embedment: 2.00 in
Installation embedment: 1.88 in

Type: Textron 1/4" Panel mate TVAS
Substrate: Concrete block
Ultimate Value: W = 690 lbs
Safety factor: 4
Edge distance factor: 1.00
Embedment factor: 1.00
Adjusted Design Value: W' = 173 lbs/anchor

Required min. edge distance: 2.50 in
Installation edge distance: 2.50 in
Required min. embedment: 1.25 in
Installation embedment: 1.88 in

Type: Textron 1/4" Panel mate TVAS
Substrate: Concrete 3350 psi
Ultimate Value: W = 2383 lbs
Safety factor: 4
Edge distance factor: 1.00
Embedment factor: 0.94
Adjusted Design Value: W' = 559 lbs/anchor

Required min. edge distance: 1.00 in
Installation edge distance: 2.50 in
Required min. embedment: 2.00 in
Installation embedment: 1.88 in

Douglas J. McDougall P.E.
Florida No. 28392
11/1/2007

Florida Board of Professional Engineers
Certificate of Authorization No. 25935

PTC, LLC
Rockledge, Fl 32955
Phone: (321) 690-1788

Client: Cat 5 Hurricane Screens, LLC
Project #: 307-0751
Report #: 837

Prepared by: D.J.McDougall
Date: 10/31/2007

Type:	Ramset 1/4" Dynaset Drop-In Anchor			
Substrate:	Concrete 3000 psi		Required min. edge distance:	1.25 in
Ultimate Value:	W =	1680 lbs	Installation edge distance:	2.50 in
Safety factor:		4	Required min. embedment:	1.13 in
Edge distance factor:		1.00	Installation embedment:	1.88 in
Embedment factor:		1.00		
Adjusted Design Value:	W' =	420 lbs/anchor		

Minimum anchor capacity:	173 lbs/anchor	TVAS
Minimum anchor capacity:	273 lbs/anchor	All others

Anchor Calculations - Pullout:

All but Textron 1/4" Panel mate TVAS

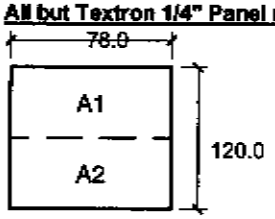

Design pressure: 70.0 psf

Zone	Area (ft^2)	Load (lbs)	Ind. (in)	Max. O.C. (in)	Anchor			Results
					Cap. (lbs)	Qty	Load (lbs)	
A_1	32.5	2275	2.0	8.00	273	11	207	OK
A_2	32.5	2275	2.0	8.00	273	11	207	OK

With Textron 1/4" Panel mate TVAS

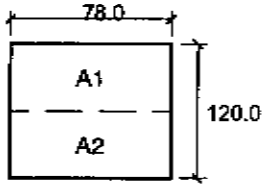

Design pressure: 70.0 psf

Zone	Area (ft^2)	Load (lbs)	Ind. (in)	Max. O.C. (in)	Anchor			Results
					Cap. (lbs)	Qty	Load (lbs)	
A_1	32.5	2275	2.0	6.00	173	14	163	OK
A_2	32.5	2275	2.0	6.00	173	14	163	OK

Anchor Calculations:

Locate anchors at head and sill 2" maximum from each corner, the first anchor beyond at a maximum of 5" and 8" maximum O.C. thereafter for all anchors except for 1/4" PanelMate TVAS which shall be a maximum of 6" on center. For wood framing installation install anchors with 1 3/4" minimum embedment and 3/4" minimum edge distance. For concrete installation install anchors with 1-7/8" minimum embedment and 2-1/2" minimum edge distance.

Douglas J. McDougall P.E.
Florida No. 28392
11/1/2007

Florida Board of Professional Engineers
Certificate of Authorization No. 25935

PTC, LLC
1535 N. Cogswell Street, Suite C25
Rockledge, FL 32955 PH(321-690-1788)

Client: Cat 5 Hurricane Screens, llc
Project #: 307-0751
Report #: 837
Prepared by: D.J.McDougall
Date: 10/31/2007

Anchor calculations - Shear:

Wood Anchor Calculations (SHEAR)

Fastener type: 1/4" ITW S6 Tapcon S6 with a Aluminum 6063-T5 side member

Substrate: Mixed maple- Southern Pine

Main member Bearing Length:	t_m =	1.625 in	Main member dowel bearing strength:	F_{em} =	5,550 psi
Side member Bearing Length:	t_s =	0.125 in	Side member dowel bearing strength:	F_{es} =	44.85 ksi
			Screw bending yield strength:	F_{yb} =	92 ksi
Mode I_m	Z_I =	701 lbs	Mode III_m	Z_{III} =	310 lbs
Mode I_s	Z_I =	436 lbs	Mode III_s	Z_{III} =	178 lbs
Mode II	Z_{II} =	282 lbs	Mode IV	Z_{IV} =	237 lbs
10D penetration:		2.500 in			
6D Min. Penetration:		1.5 in	Duration Factor:	C_D =	1.6
Main Member Embedment:		1.88 in			
Allowable Design Value:	Z' =	285.0 lbs/anchor			

Fastener type: 1/4" TVAS PanelMate with a Aluminum 6063-T5 side member

Substrate: Mixed maple- Southern Pine

Main member Bearing Length:	t_m =	1.625 in	Main member dowel bearing strength:	F_{em} =	5,550 psi
Side member Bearing Length:	t_s =	0.125 in	Side member dowel bearing strength:	F_{es} =	44.85 ksi
			Screw bending yield strength:	F_{yb} =	92 ksi
Mode I_m	Z_I =	705 lbs	Mode III_m	Z_{III} =	313 lbs
Mode I_s	Z_I =	438 lbs	Mode III_s	Z_{III} =	182 lbs
Mode II	Z_{II} =	283 lbs	Mode IV	Z_{IV} =	244 lbs
10D penetration:		2.500 in			
6D Min. Penetration:		1.5 in	Duration Factor:	C_D =	1.6
Main Member Embedment:		1.88 in			
Allowable Design Value:	Z' =	291.8 lbs/anchor			

$(fb/Fb) + (fv/Fv)^2 = 1.0 \leq 1.0$

Maximum design value in cantilever: 318.0 lbs/anchor

Minimum anchor capacity: 291.8 lbs/anchor

Fastener type: 1/4" Elco MAP PanelMate with a Aluminum 6063-T5 side member

Substrate: Mixed maple- Southern Pine

Main member Bearing Length:	t_m =	1.625 in	Main member dowel bearing strength:	F_{em} =	5,550 psi
Side member Bearing Length:	t_s =	0.125 in	Side member dowel bearing strength:	F_{es} =	44.85 ksi
			Screw bending yield strength:	F_{yb} =	92 ksi
Mode I_m	Z_I =	705 lbs	Mode III_m	Z_{III} =	313 lbs
Mode I_s	Z_I =	438 lbs	Mode III_s	Z_{III} =	182 lbs
Mode II	Z_{II} =	283 lbs	Mode IV	Z_{IV} =	244 lbs
10D penetration:		2.500 in			
6D Min. Penetration:		1.5 in	Duration Factor:	C_D =	1.6
Main Member Embedment:		1.88 in			
Allowable Design Value:	Z' =	291.8 lbs/anchor	Duration Factor = 1.0 since controlling mode is not a function of wood only.		

Minimum anchor capacity: 291.8 lbs/anchor

Douglas J. McDougall, P.E.
Florida No. 28392
11/1/2007

Florida Board of Professional Engineers
Certificaste of Authorization No. 25935

PTC, LLC
1535 N. Cogswell Street, Suite C25
Rockledge, FL 32955 PH(321-690-1788)

Client: Cat 5 Hurricane Screens, llc
Project #: 307-0751
Report #: 837
Prepared by: D.J.McDougall
Date: 10/31/2007

Masonry Anchor Calculations (SHEAR)

Fastener type: 1/4" ITW Topcon S6

Substrate: CMU (Conservative for Concrete) (NOA 03-0722.05)

Minimum embedment:		1.25 in
Minimum edge distance:		2.50 in
Allowable Design Value:	Z' =	272.0 lbs/anchor

ANCHOR CAPACITY REDUCTION FACTORS:

Edge Distance: Minimum specified edge distance used (2 1/2"). No reduction.

Allowable Design Value: Z' = 272.0 lbs/anchor (Anchors @ Frame)

Minimum anchor capacity: 272.0 lbs/anchor

Fastener type: 1/4" ITW Topcon S6 concrete 3295 psi concrete Aluminum 6063-T5 side member

Substrate: CMU

Main member Bearing Length:	t_m =	1.611 in	Main member dowel bearing strength:	F_{em} =	5,700 psi
Side member Bearing Length:	t_s =	0.125 in	Side member dowel bearing strength:	F_{es} =	44.85 ksi
			Screw bending yield strength:	F_{yb} =	92 ksi
Mode I_m	Z_I =	735 lbs	Mode III_m	Z_{III} =	333 lbs
Mode I_s	Z_I =	449 lbs	Mode III_s	Z_{III} =	207 lbs
Mode II	Z_{II} =	295 lbs	Mode IV	Z_{IV} =	282 lbs
			Duration Factor:	C_D =	1
Main Member Embedment:		1.88 in			
Allowable Design Value:	Z' =	207.3 lbs/anchor			

Duration Factor = 1.0 since controlling mode is not a function of wood only.

Minimum anchor capacity: 207.3 lbs/anchor

Minimum anchor capacity CMU: 207.3 lbs/anchor

Concrete Anchor Calculations (SHEAR)

Fastener type: 1/4" ITW Topcon S6 concrete

Substrate: 3295 psi concrete

Minimum embedment:		1.75 in
Minimum edge distance:		1.25 in
Allowable Design Value:	Z' =	344.0 lbs/anchor

ANCHOR CAPACITY REDUCTION FACTORS:

Edge Distance: Minimum specified edge distance used (2 1/2"). No reduction.

Spacing: 100% @ 3 in; 50% @ 1.5 in

Spacing of Frame Inst. Anchors 5.00 in (Min) Reduction Factor: 1.00

Allowable Design Value: Z' = 344.0 lbs/anchor (Anchors @ Frame)

Fastener type: 1/4" ITW Topcon S6 concrete 3295 psi concrete Aluminum 6063-T5 side member

Substrate: Concrete

Main member Bearing Length:	t_m =	1.616 in	Main member dowel bearing strength:	F_{em} =	8,100 psi
Side member Bearing Length:	t_s =	0.125 in	Side member dowel bearing strength:	F_{es} =	44.85 ksi
			Screw bending yield strength:	F_{yb} =	92 ksi
Mode I_m	Z_I =	1047 lbs	Mode III_m	Z_{III} =	452 lbs
Mode I_s	Z_I =	449 lbs	Mode III_s	Z_{III} =	239 lbs
Mode II	Z_{II} =	413 lbs	Mode IV	Z_{IV} =	328 lbs
			Duration Factor:	C_D =	1
Main Member Embedment:		1.88 in			
Allowable Design Value:	Z' =	239.2 lbs/anchor			

Duration Factor = 1.0 since controlling mode is not a function of wood only.

Minimum anchor capacity: 239.2 lbs/anchor

Douglas J. McDougall, P.E.
Florida No: 28392
11/1/2007

Florida Board of Professional Engineers
Certificaste of Authorization No. 25935

PTC, LLC
1535 N. Cogswell Street, Suite C25
Rockledge, FL 32955 PH(321-690-1788)

Client: Cat 5 Hurricane Screens, llc
Project #: 307-0751
Report #: 837
Prepared by: D.J.McDougall
Date: 10/31/2007

Fastener type: 1/4" Elco Panelmate concrete — 3350 psi concrete — Aluminum 6063-T5 — side member

Substrate: Concrete

Main member Bearing Length:	t_m =	1.625 in	Main member dowel bearing strength:	F_{em} =	8,100 psi
Side member Bearing Length:	t_s =	0.125 in	Side member dowel bearing strength:	F_{es} =	44.85 ksi
			Screw bending yield strength:	F_{yb} =	92 ksi
Mode I_m	Z_I=	1040 lbs	Mode III_m	Z_{III}=	444 lbs
Mode I_s	Z_I=	443 lbs	Mode III_s	Z_{III}=	224 lbs
Mode II	Z_{II}=	410 lbs	Mode IV	Z_{IV}=	305 lbs
			Duration Factor:	C_D =	1
Main Member Embedment:		1.88 in			
Allowable Design Value:	Z'=	223.8 lbs/anchor			

Duration Factor = 1.0 since controlling mode is not a function of wood only.

Fastener type: 1/4" Elco Panelmate concrete

Substrate: 3350 psi concrete

Minimum embedment:		1.75 in
Minimum edge distance:		2.50 in
Allowable Design Value:	Z'=	440.0 lbs/anchor
Minimum anchor capacity:		223.8 lbs/anchor

Fastener type: 1/4" Elco Panelmate TVAS conc — 3350 psi concrete — Aluminum 6063-T5 — side member

Substrate: Concrete

Main member Bearing Length:	t_m =	1.625 in	Main member dowel bearing strength:	F_{em} =	8,100 psi
Side member Bearing Length:	t_s =	0.125 in	Side member dowel bearing strength:	F_{es} =	44.85 ksi
			Screw bending yield strength:	F_{yb} =	92 ksi
Mode I_m	Z_I=	1040 lbs	Mode III_m	Z_{III}=	444 lbs
Mode I_s	Z_I=	443 lbs	Mode III_s	Z_{III}=	224 lbs
Mode II	Z_{II}=	410 lbs	Mode IV	Z_{IV}=	305 lbs
			Duration Factor:	C_D =	1
Main Member Embedment:		1.88 in			
Allowable Design Value:	Z'=	223.8 lbs/anchor			

Duration Factor = 1.0 since controlling mode is not a function of wood only.

Fastener type: 1/4" Elco Panelmate TVAS conc

Substrate: 3350 psi concrete

Minimum embedment:		2.00 in
Minimum edge distance:		1.00 in
Allowable Design Value:	Z'=	265.0 lbs/anchor
Minimum anchor capacity:		223.8 lbs/anchor

Minimum anchor capacity- Concrete: 223.8 lbs/anchor

Minimum Single anchor capacity per Substrate and Location:

Wood	285.0 lbs/anchor
Wood - TVAS	291.8 lbs/anchor
Masonry CMU	207.3 lbs/anchor
Concrete	223.8 lbs/anchor

Minimum value in Shear: 291.8 lbs/anchor TVAS

Douglas J. McDougall, P.E.
Florida No. 28392
11/1/2007

Florida Board of Professional Engineers
Certificaste of Authorization No. 25935

PTC, LLC
Rockledge, Fl 32955 Cat 5 Hurricane Screens, LLC
Phone: (321) 690-1788 13484 Chambord St.

Client: Cat 5 Hurricane Screens, llc
Project #: 307-0751
Report #: 837

Prepared by: D.J.McDougall
Date: 10/31/2007

Anchor Calculations - Shear:

All but Textron 1/4" Panel mate TVAS into Concrete block

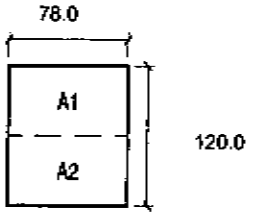

Design pressure: 70.0 psf

Zone	Area (ft^2)	Load (lbs)	Ind. (in)	Max. O.C. (in)	Anchor			Results
					Cap. (lbs)	Qty	Load (lbs)	
A_1	32.5	2275	2.0	8.00	207	11	207	OK
A_2	32.5	2275	2.0	8.00	207	11	207	OK

Anchor Calculations:

Locate anchors at head and sill 2" maximum from each corner, the first anchor beyond at a maximum of 5" and 8" maximum O.C. thereafter. For wood framing installation install anchors with 1-7/8" minimum embedment and 3/4" minimum edge distance. For concrete installation install anchors with 1 7/8" minimum embedment and 2-1/2" minimum edge distance.

With Textron 1/4" Panel mate TVAS into Concrete block

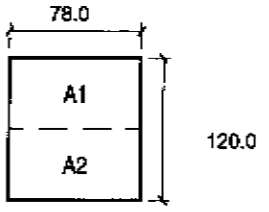

Design pressure: 70.0 psf

Zone	Area (ft^2)	Load (lbs)	Ind. (in)	Max. O.C. (in)	Anchor			Results
					Cap. (lbs)	Qty	Load (lbs)	
A_1	32.5	2275	2.0	6.00	173	14	163	OK
A_2	32.5	2275	2.0	6.00	173	14	163	OK

Anchor Calculations:

Locate anchors at head and sill 2" maximum from each corner, the first anchor beyond at a maximum of 5" and 8" maximum O.C. thereafter. For wood framing installation install anchors with 1 1/2" minimum embedment and 3/4" minimum edge distance. For concrete installation install anchors with 1 1/4" minimum embedment and 2" minimum edge distance.

Overall Conclusion

The Anchor spacing in **Pullout is** deemed to be the controlling spacing and this is the spacing that isindicated on the drawings. It should be noted that anchor spacing for 1/4" PanelMate TVAS anchor is different from all the others

Douglas J. McDougall P.E.
Florida No. 28392
11/1/2007

Florida Board of Professional Engineers
Certificate of Authorization No. 25935

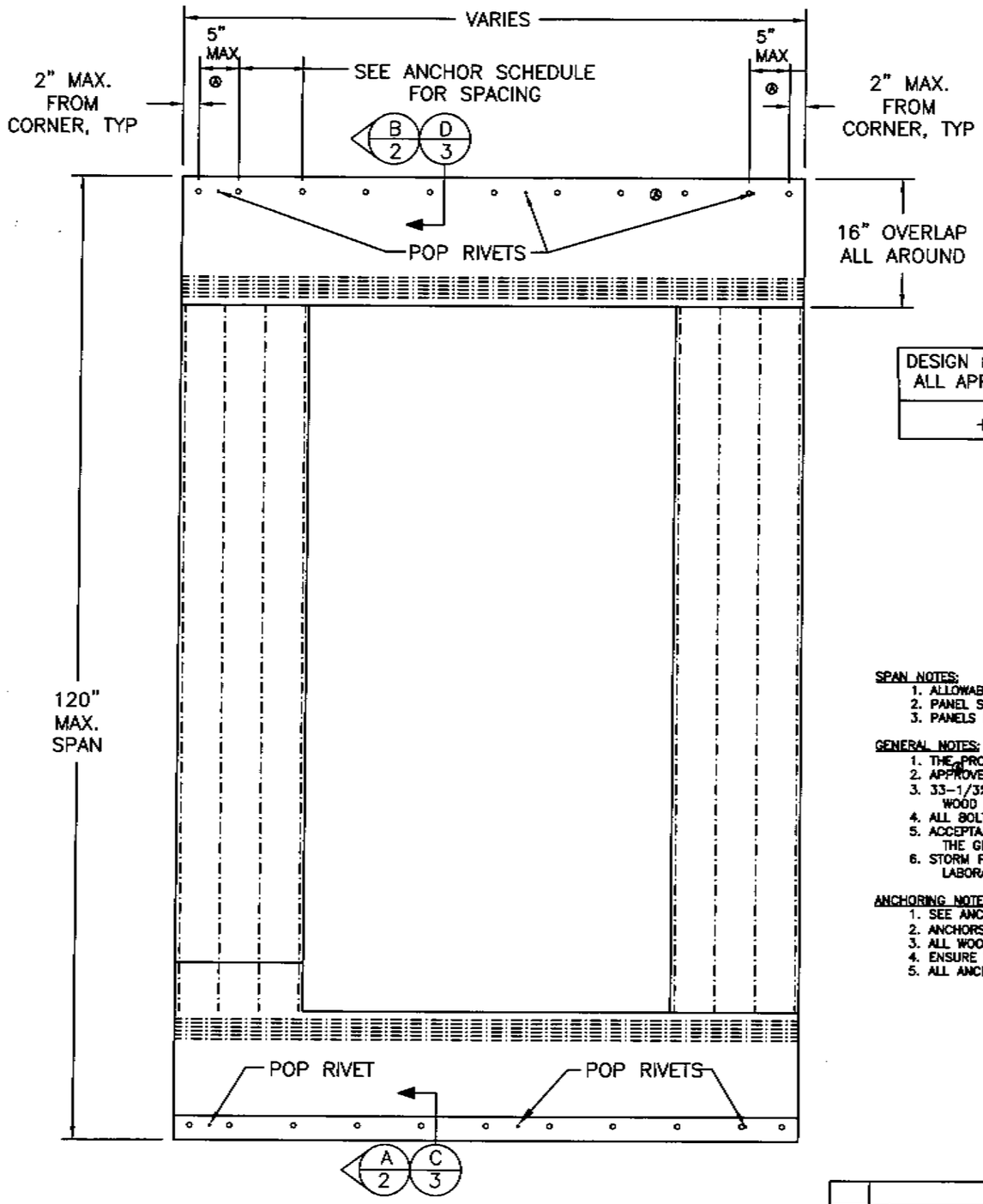

EXTERIOR ELEVATION

BILL OF MATERIAL	
ITEM #	DESCRIPTION
1	POLYPROPYLENE FABRIC
2	BLACK THREAD
3	1/8" X 1" X 1/8" THICK ALUMINUM FLAT BAR 6061-T6
4	1/8" X 1 1/2" X 1/8" THICK ALUMINUM FLAT BAR 6061-T6
5	1" X 1" X 3/16" THICK ALUMINUM ANGLE 6061-T6
6	1 1/2" X 1 1/2" X 3/16" THICK ALUMINUM ANGLE 6061-T6
7	1/8" ALUMINUM POP RIVET 1/2" LONG
8	ANCHORS, SEE ANCHOR SCHEDULES
9	NOT USED
10	1/4-20 x 3/4" STAINLESS STEEL BOLT
11	1/4-20 x 1" STAINLESS STEEL BOLT
12	1/4-20 x 1 1/2" STAINLESS STEEL BOLT
13	1/4 STAINLESS STEEL LOCK WASHER
14	1/4 STAINLESS STEEL JAMB NUT
15	1/4" STAINLESS STEEL LOCK NUT

DESIGN PRESSURE RATING CHART ALL APPROVED CONFIGURATIONS
+70.0/-70.0 PSF

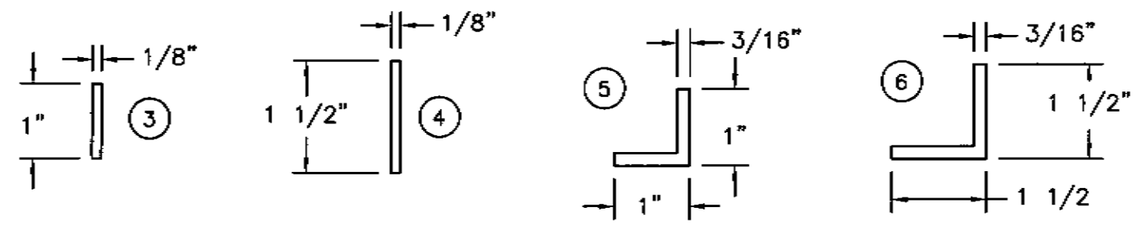

SPAN NOTES:
1. ALLOWABLE DESIGN PRESSURES SHALL NOT BE EXCEEDED.
2. PANEL SPANS LONGER THAN MAXIMUM NOTED ARE NOT ALLOWABLE.
3. PANELS MAY BE MOUNTED VERTICALLY OR HORIZONTALLY.

GENERAL NOTES:
1. THE PRODUCT SHOWN HEREIN IS DESIGNED AND MANUFACTURED TO COMPLY WITH THE 2003 INTERNATIONAL BUILDING/RESIDENTIAL CODE AS A LARGE MISSILE IMPACT SYSTEM.
2. APPROVED IMPACT PROTECTIVE SYSTEM IS NOT REQUIRED ON THIS PRODUCT.
3. 33-1/3% INCREASE IN ALLOWABLE STRESS HAS NOT BEEN USED IN THE DESIGN OF THIS PRODUCT. WIND LOAD DURATION FACTOR Cd=1.6 HAS BEEN USED FOR WOOD ANCHOR DESIGN.
4. ALL BOLTS AND WASHERS SHALL BE ZINC COATED, GALVANIZED OR STAINLESS STEEL WITH A MINIMUM TENSILE STRENGTH OF 60 KSI.
5. ACCEPTANCE CRITERIA AS PROVIDED IN ASTM E1996 HAS BEEN MET BY THIS SYSTEM AS A NON-POROUS SYSTEM. THEREFORE NO MINIMUM SEPARATION FROM THE GLAZING BEING PROTECTED IS REQUIRED.
6. STORM PANELS HAVE BEEN DESIGNED AND TESTED TO THE MAXIMUM SPAN AND LOADS SHOWN IN THESE DRAWINGS. SEE CERTIFIED TESTING LABORATORIES TEST REPORT CTLA-1523W

ANCHORING NOTES:
1. SEE ANCHOR SCHEDULES FOR ALLOWABLE LOADS, SPANS AND ANCHOR SPACING FOR EACH ANCHORAGE SCENARIO.
2. ANCHORS SHALL BE INSTALLED IN ACCORDANCE WITH MANUFACTURER'S RECOMMENDATIONS.
3. ALL WOOD ANCHORS SHALL HAVE EMBEDMENT AS SHOWN INTO STRUCTURAL FRAMING, NOT INCLUDING PLYWOOD OR OTHER FINISHES.
4. ENSURE THAT MINIMUM EDGE DISTANCES AND MINIMUM EMBEDMENT VALUES AS SHOWN FOR EACH ANCHOR TYPE IN ANCHOR SCHEDULES ARE MAINTAINED.
5. ALL ANCHORS SHALL HAVE A LENGTH ADEQUATE TO PROVIDE THE MINIMUM EMBEDMENT VALUES LISTED FOR EACH ANCHOR.

SYM	REVISION	DATE	BY
A	Changed fastener locations and revised notes.	10-30-07	DJM

D J McDougall
Florida P. E. No. 28392
PTC, LLC
1535 Cogswell Street, Suite C25
Rockledge, Florida 32955
FBPE Certificate of Authorization NO. 25935

CAT 5 HURRICANE SCREENS, LLC.
TRINITY, FLORIDA

TITLE: WIND ABATEMENT SYSTEM
ELEVATION, ANCHORING, BOM AND NOTES

PREPARED BY: PTC, LLC
Phone 321.690.1788 Fax 321.690.1789

DRN: HFN	DATE: 08/06/07
SCALE: N.T.S.	DWG. NO: CAT0003
REV:	SHEET: 1 OF 3

11-01-07

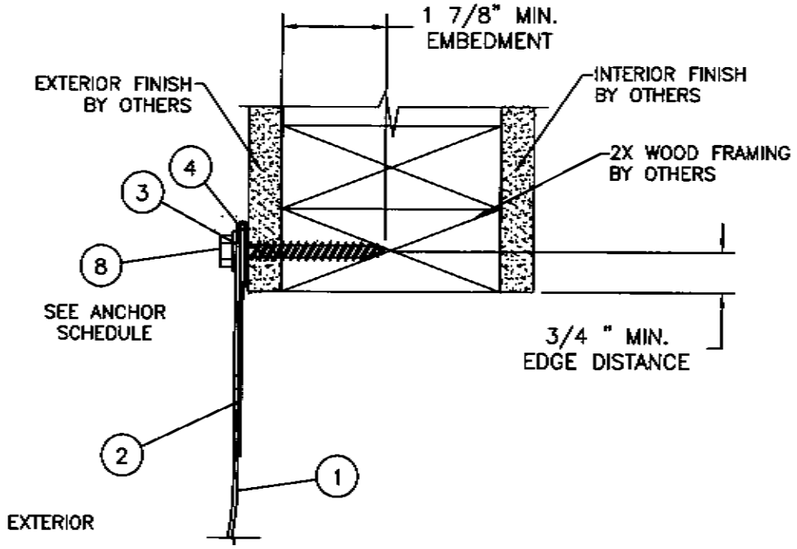

SECTION B
WOOD FRAMING INSTALLATION

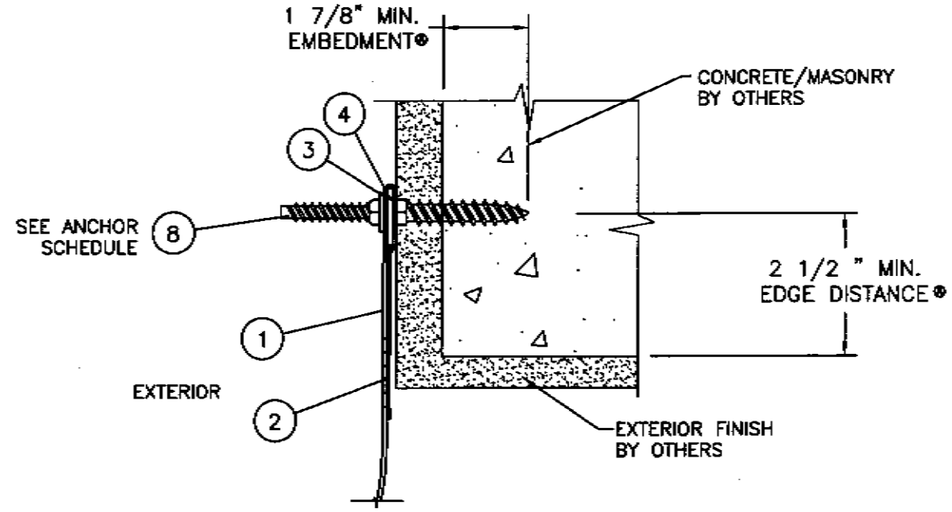

SECTION B
CONCRETE/MASONRY INSTALLATION

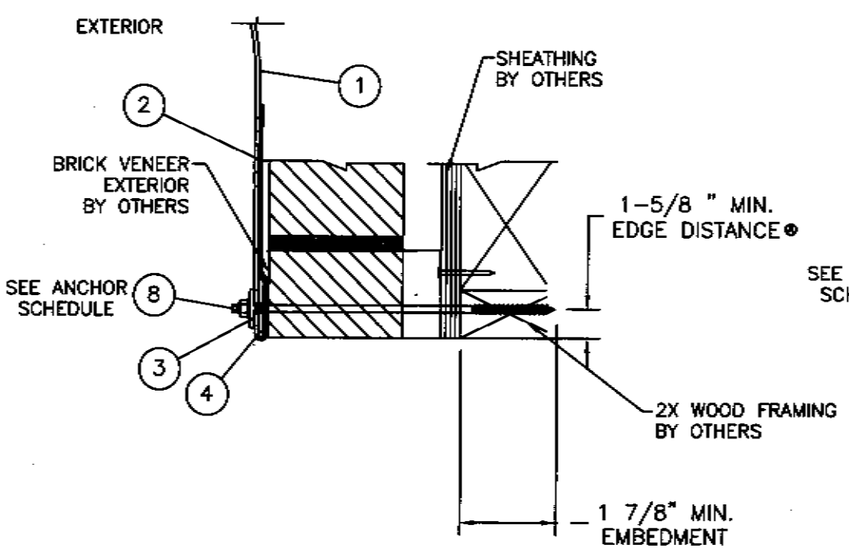

SECTION A
WOOD INSTALLATION

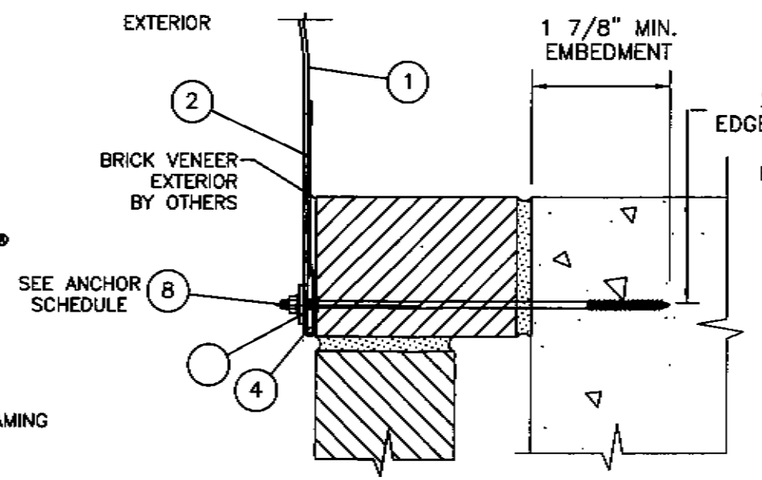

® SECTION A
MASONRY INSTALLATION

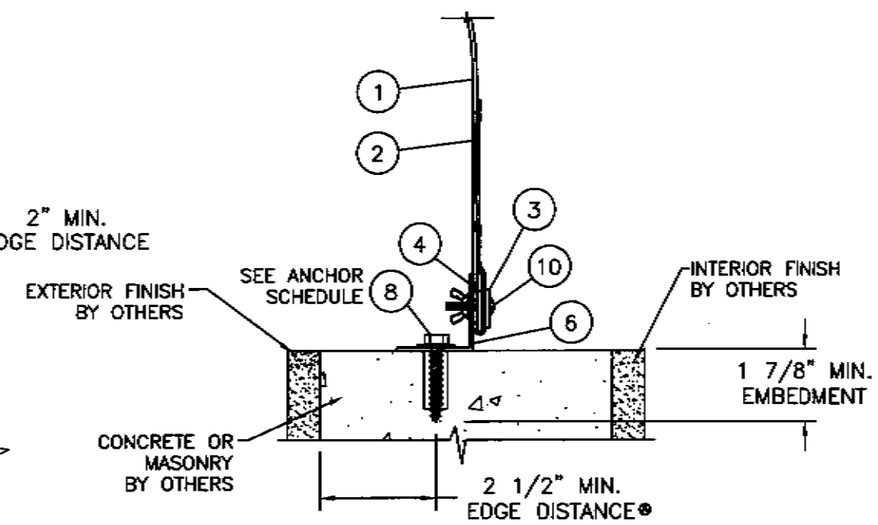

SECTION A
CONCRETE/MASONRY WITH MOUNTING ANGLE

SYM	REVISION	DATE	BY
A	Added detail and revised fastener location dimensions.	10/30/07	DJM

D J McDougall
Florida P. E. No. 28392
PTC, LLC
1535 Cogswell Street, Suite C25
Rockledge, Florida 32955
FBPE Certificate of Authorization NO. 25935

11-01-07

CAT 5 HURRICANE SCREENS, LLC.
TRINITY, FLORIDA

TITLE: WIND ABATEMENT SYSTEM
CROSS SECTIONS

PREPARED BY: PTC, LLC
Phone 321.690.1788 Fax 321.690.1789

DRN: HFN
DATE: 08/06/07
SCALE: N.T.S.
DWG. NO: CAT0003
REV:
SHEET: 2 OF 3

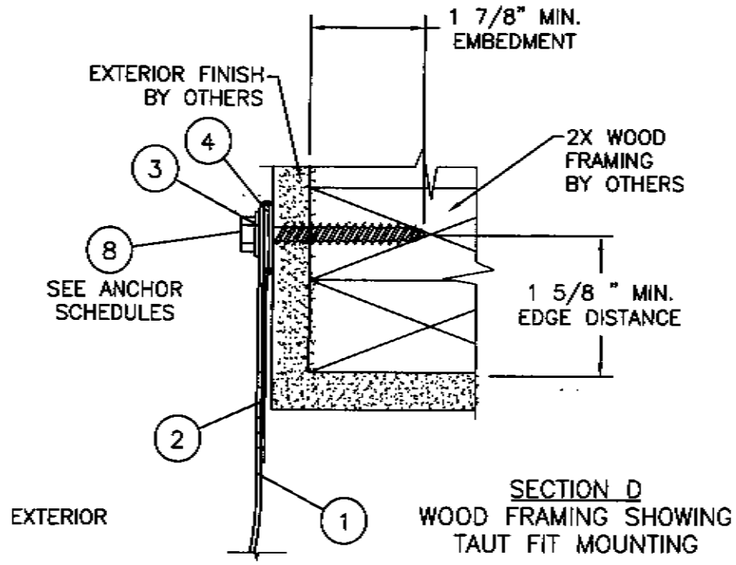

SECTION D
WOOD FRAMING SHOWING
TAUT FIT MOUNTING

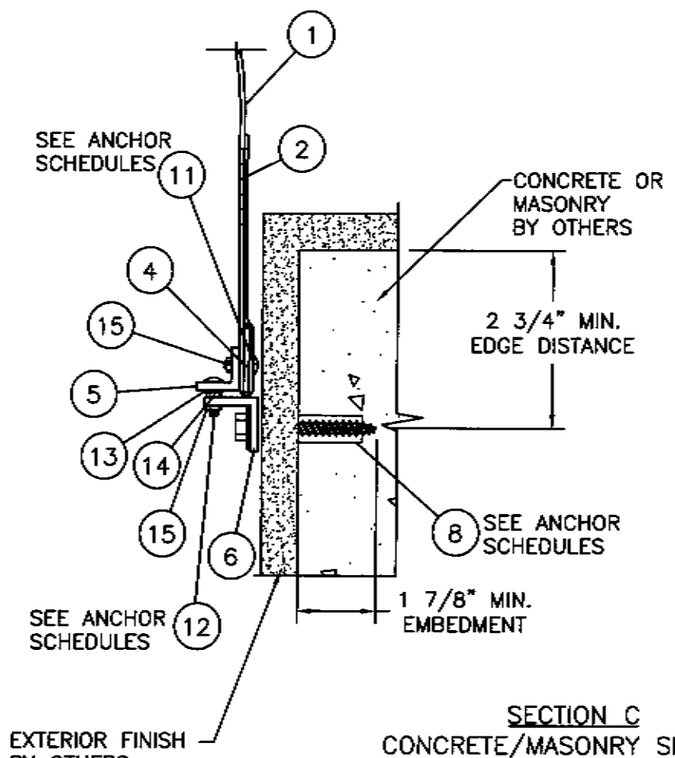

SECTION C
CONCRETE/MASONRY SHOWING
TAUT FIT MOUNTING

ANCHOR SCHEDULE – WOOD SUBSTRATE (MIN G=0.53)

ANCHOR TYPE	LOAD (PSF)	UP TO SPANS OF (IN)	ON CENTER DISTANCE BETWEEN ANCHORS (IN)
1/4" ITW TAPCON SG W/ 1½" MIN EMBEDMENT.	70	37"	8"
	70	56"	8"
	70	70"	8"
	70	97"	8"
	70	120"	8"
1/4" ELCO PANELMATE (MALE OR FEMALE) WITH 1⅜" MIN. EMBEDMENT	70	37"	8"
	70	56"	8"
	70	70"	8"
	70	97"	8"
	70	120"	8"
1/4" ELCO PANELMATE INSERT WITH 1⅝" MIN. EMBEDMENT	70	37"	8"
	70	56"	8"
	70	70"	8"
	70	97"	8"
	70	120"	8"
1/4" ELCO PANELMATE (TVAS) WITH 2" MIN. EMBEDMENT	70	37"	6"
	70	56"	6"
	70	70"	6"
	70	97"	6"
	70	120"	6"

ANCHOR SCHEDULE – CONCRETE SUBSTRATE (MIN 3000 PSI)

ANCHOR TYPE	LOAD (PSF)	UP TO SPANS OF (IN)	ON CENTER DISTANCE BETWEEN ANCHORS (IN)
1/4" ITW TAPCON SG W/ 1¾" MIN EMBEDMENT.	70	37"	8"
	70	56"	8"
	70	70"	8"
	70	97"	8"
	70	120"	8"
1/4" ELCO PANELMATE (MALE OR FEMALE) WITH 1⅜" MIN. EMBEDMENT	70	37"	8"
	70	56"	8"
	70	70"	8"
	70	97"	8"
	70	120"	8"
1/4" ELCO PANELMATE INSERT WITH 1⅝" MIN. EMBEDMENT	70	37"	8"
	70	56"	8"
	70	70"	8"
	70	97"	8"
	70	120"	8"
1/4" ELCO PANELMATE (TVAS) WITH 2" MIN. EMBEDMENT	70	37"	6"
	70	56"	6"
	70	70"	6"
	70	97"	6"
	70	120"	6"

ANCHOR SCHEDULE – HOLLOW BLOCK SUBSTRATE

ANCHOR TYPE	LOAD (PSF)	UP TO SPANS OF (IN)	ON CENTER DISTANCE BETWEEN ANCHORS (IN)
1/4" ITW TAPCON SG W/ 1¾" MIN EMBEDMENT.	70	37"	8"
	70	56"	8"
	70	70"	8"
	70	97"	8"
	70	120"	8"
1/4" ELCO PANELMATE (MALE OR FEMALE) WITH 1⅜" MIN. EMBEDMENT	70	37"	8"
	70	56"	8"
	70	70"	8"
	70	97"	8"
	70	120"	8"
1/4" ELCO PANELMATE INSERT WITH 1⅝" MIN. EMBEDMENT	70	37"	8"
	70	56"	8"
	70	70"	8"
	70	97"	8"
	70	120"	8"
1/4" ELCO PANELMATE (TVAS) WITH 1⅝" MIN. EMBEDMENT	70	37"	6"
	70	56"	6"
	70	70"	6"
	70	97"	6"
	70	120"	6"

ANCHOR SCHEDULE – SPECIAL ANCHORS AND INSTALLATION BOLTS

ANCHOR TYPE	LOAD (PSF)	UP TO SPANS OF (IN)	ON CENTER DISTANCE BETWEEN ANCHORS (IN)
SPECIAL ANGLE ANCHOR ONLY USED IN SECTION A, SHEET 2 WITH MOUNTING ANGLE TO CONCRETE SLAB	70	37"	8"
	70	56"	8"
3/8" DROP IN CONCRETE ANCHOR	70	70"	8"
	70	97"	8"
	70	120"	8"
SPECIAL ¼–20 ANGLE ANCHOR WINGNUT SS BOLT (#10, 11 &12 ON BOM)	70	37"	USE SAME SPACING USED TO ANCHOR RAIL TO SUBSTRATE. (12"MAX)
	70	56"	
1/4" STAINLESS STEEL BOLT	70	70"	
	70	97"	
	70	120"	

SYM	REVISION	DATE	BY
A	Revised anchor spacing to match Test Report	10/30/07	DJM

D J McDougall
Florida P. E. No. 28938
PTC, LLC
1535 Cogswell Street, Suite C25
Rockledge, Florida 32955
FBPE Certificate of Authorization NO. 25935

11-01-07

CAT 5 HURRICANE SCREENS, LLC.
TRINITY, FLORIDA

TITLE: WIND ABATEMENT SYSTEM
ANCHOR SCHEDULES AND CROSS SECTIONS

PREPARED BY:
PTC, LLC
Phone 321.690.1788 Fax 321.690.1789

DRN: HFN
DATE: 08/06/07
SCALE: N.T.S.
DWG. NO: CAT0003
REV:
SHEET: 3 OF 3