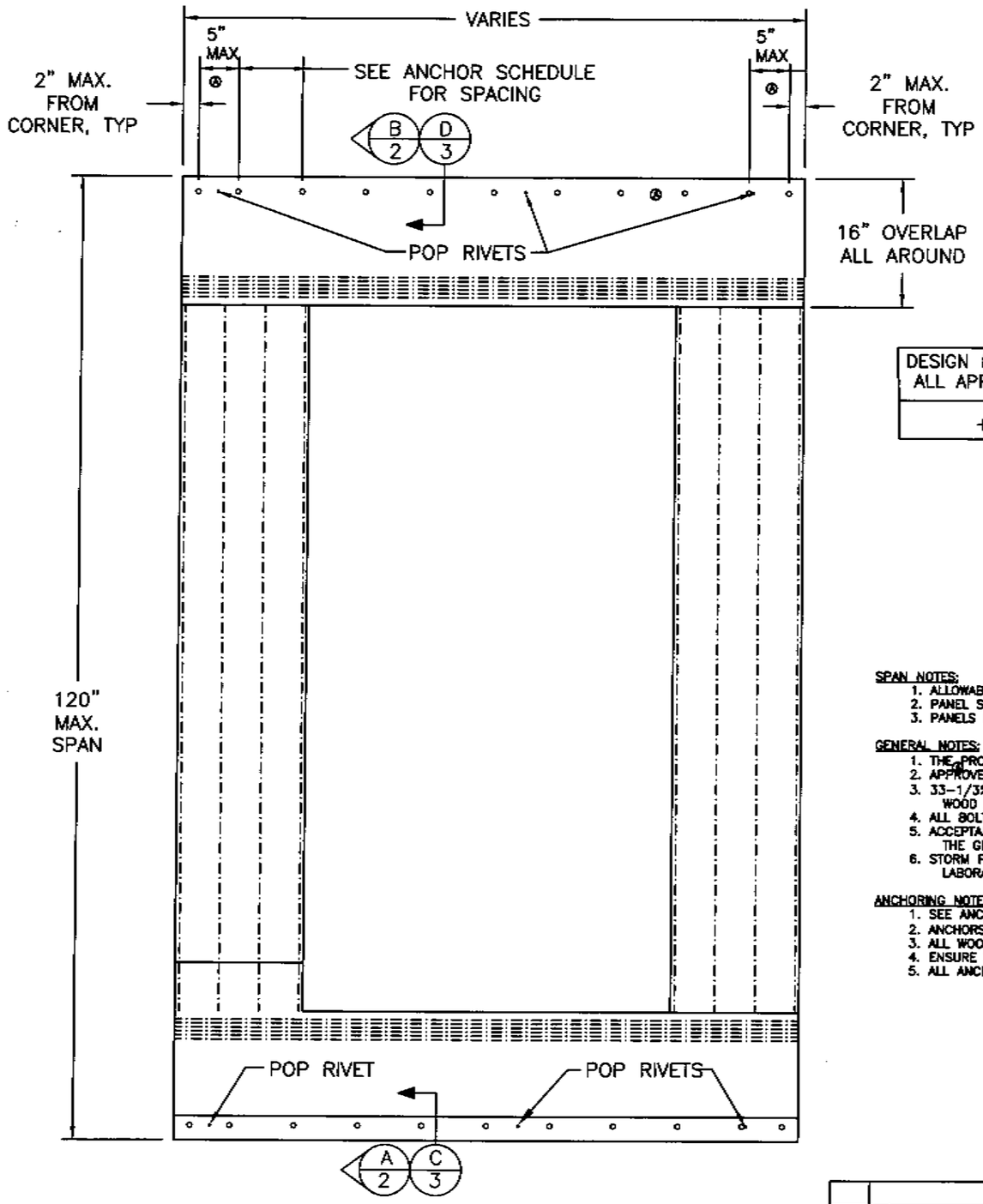

EXTERIOR ELEVATION

BILL OF MATERIAL	
ITEM #	DESCRIPTION
1	POLYPROPYLENE FABRIC
2	BLACK THREAD
3	1/8" X 1" X 1/8" THICK ALUMINUM FLAT BAR 6061-T6
4	1/8" X 1 1/2" X 1/8" THICK ALUMINUM FLAT BAR 6061-T6
5	1" X 1" X 3/16" THICK ALUMINUM ANGLE 6061-T6
6	1 1/2" X 1 1/2" X 3/16" THICK ALUMINUM ANGLE 6061-T6
7	1/8" ALUMINUM POP RIVET 1/2" LONG
8	ANCHORS, SEE ANCHOR SCHEDULES
9	NOT USED
10	1/4-20 x 3/4" STAINLESS STEEL BOLT
11	1/4-20 x 1" STAINLESS STEEL BOLT
12	1/4-20 x 1 1/2" STAINLESS STEEL BOLT
13	1/4 STAINLESS STEEL LOCK WASHER
14	1/4 STAINLESS STEEL JAMB NUT
15	1/4" STAINLESS STEEL LOCK NUT

DESIGN PRESSURE RATING CHART ALL APPROVED CONFIGURATIONS
+70.0/-70.0 PSF

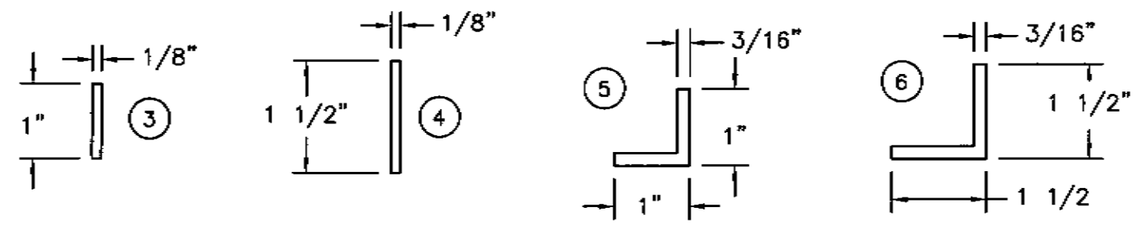

SPAN NOTES:
1. ALLOWABLE DESIGN PRESSURES SHALL NOT BE EXCEEDED.
2. PANEL SPANS LONGER THAN MAXIMUM NOTED ARE NOT ALLOWABLE.
3. PANELS MAY BE MOUNTED VERTICALLY OR HORIZONTALLY.

GENERAL NOTES:
1. THE PRODUCT SHOWN HEREIN IS DESIGNED AND MANUFACTURED TO COMPLY WITH THE 2003 INTERNATIONAL BUILDING/RESIDENTIAL CODE AS A LARGE MISSILE IMPACT SYSTEM.
2. APPROVED IMPACT PROTECTIVE SYSTEM IS NOT REQUIRED ON THIS PRODUCT.
3. 33-1/3% INCREASE IN ALLOWABLE STRESS HAS NOT BEEN USED IN THE DESIGN OF THIS PRODUCT. WIND LOAD DURATION FACTOR Cd=1.6 HAS BEEN USED FOR WOOD ANCHOR DESIGN.
4. ALL BOLTS AND WASHERS SHALL BE ZINC COATED, GALVANIZED OR STAINLESS STEEL WITH A MINIMUM TENSILE STRENGTH OF 60 KSI.
5. ACCEPTANCE CRITERIA AS PROVIDED IN ASTM E1996 HAS BEEN MET BY THIS SYSTEM AS A NON-POROUS SYSTEM. THEREFORE NO MINIMUM SEPARATION FROM THE GLAZING BEING PROTECTED IS REQUIRED.
6. STORM PANELS HAVE BEEN DESIGNED AND TESTED TO THE MAXIMUM SPAN AND LOADS SHOWN IN THESE DRAWINGS. SEE CERTIFIED TESTING LABORATORIES TEST REPORT CTLA-1523W

ANCHORING NOTES:
1. SEE ANCHOR SCHEDULES FOR ALLOWABLE LOADS, SPANS AND ANCHOR SPACING FOR EACH ANCHORAGE SCENARIO.
2. ANCHORS SHALL BE INSTALLED IN ACCORDANCE WITH MANUFACTURER'S RECOMMENDATIONS.
3. ALL WOOD ANCHORS SHALL HAVE EMBEDMENT AS SHOWN INTO STRUCTURAL FRAMING, NOT INCLUDING PLYWOOD OR OTHER FINISHES.
4. ENSURE THAT MINIMUM EDGE DISTANCES AND MINIMUM EMBEDMENT VALUES AS SHOWN FOR EACH ANCHOR TYPE IN ANCHOR SCHEDULES ARE MAINTAINED.
5. ALL ANCHORS SHALL HAVE A LENGTH ADEQUATE TO PROVIDE THE MINIMUM EMBEDMENT VALUES LISTED FOR EACH ANCHOR.

SYM	REVISION	DATE	BY
A	Changed fastener locations and revised notes.	10-30-07	DJM

D J McDougall
Florida P. E. No. 28392
PTC, LLC
1535 Cogswell Street, Suite C25
Rockledge, Florida 32955
FBPE Certificate of Authorization NO. 25935

CAT 5 HURRICANE SCREENS, LLC.
TRINITY, FLORIDA

TITLE: WIND ABATEMENT SYSTEM
ELEVATION, ANCHORING, BOM AND NOTES

PREPARED BY: PTC, LLC
Phone 321.690.1788 Fax 321.690.1789

DRN: HFN	DATE: 08/06/07
SCALE: N.T.S.	DWG. NO: CAT0003
REV:	SHEET: 1 OF 3

11-01-07

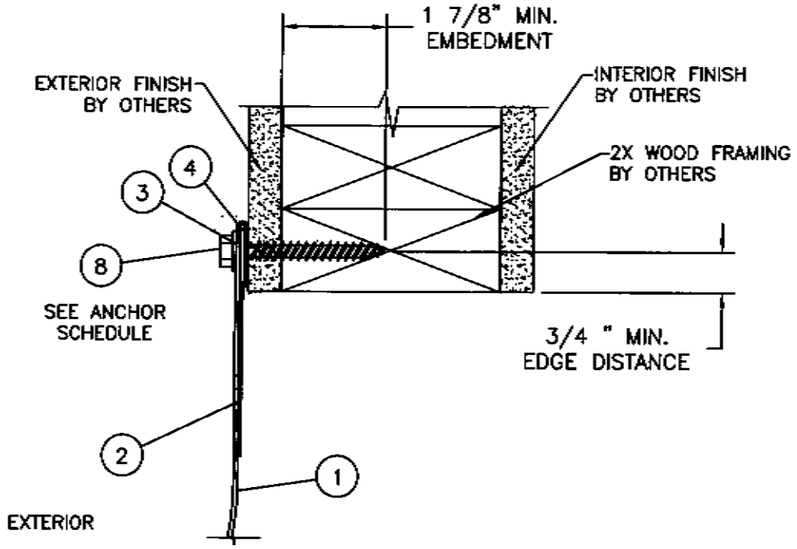

SECTION B
WOOD FRAMING INSTALLATION

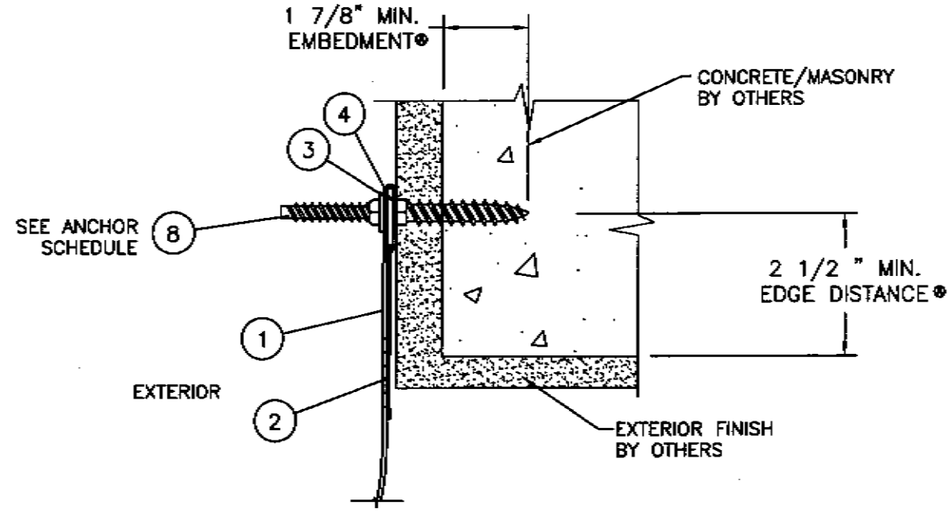

SECTION B
CONCRETE/MASONRY INSTALLATION

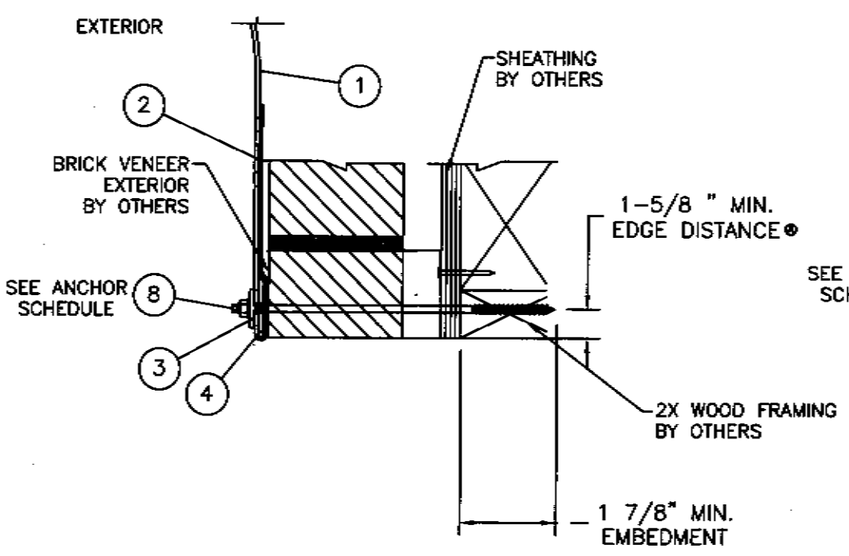

SECTION A
WOOD INSTALLATION

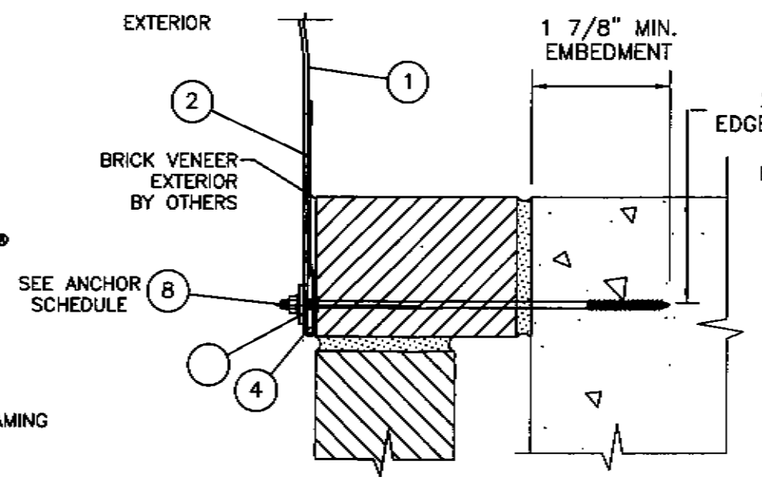

® SECTION A
MASONRY INSTALLATION

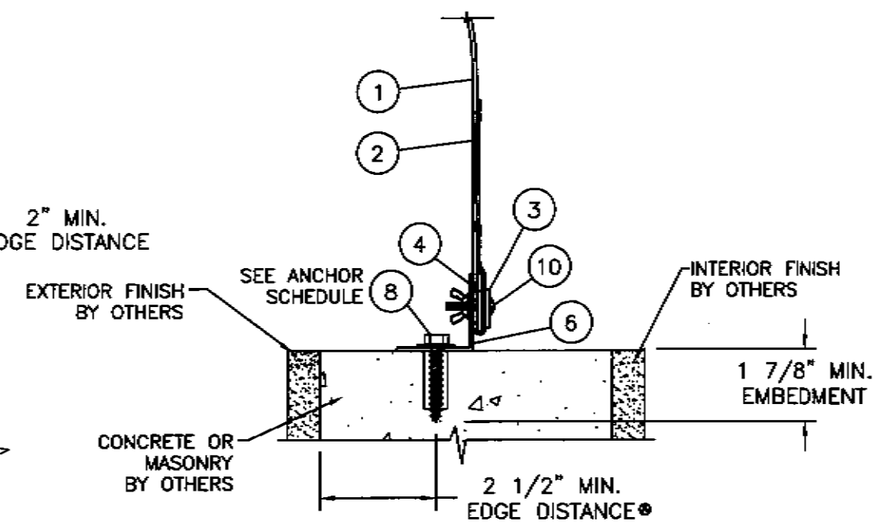

SECTION A
CONCRETE/MASONRY WITH MOUNTING ANGLE

SYM	REVISION	DATE	BY
A	Added detail and revised fastener location dimensions.	10/30/07	DJM

D J McDougall
Florida P. E. No. 28392
PTC, LLC
1535 Cogswell Street, Suite C25
Rockledge, Florida 32955
FBPE Certificate of Authorization NO. 25935

11-01-07

CAT 5 HURRICANE SCREENS, LLC.
TRINITY, FLORIDA

TITLE: WIND ABATEMENT SYSTEM
CROSS SECTIONS

PREPARED BY: PTC, LLC
Phone 321.690.1788 Fax 321.690.1789

DRN: HFN
DATE: 08/06/07
SCALE: N.T.S.
DWG. NO: CAT0003
REV:
SHEET: 2 OF 3

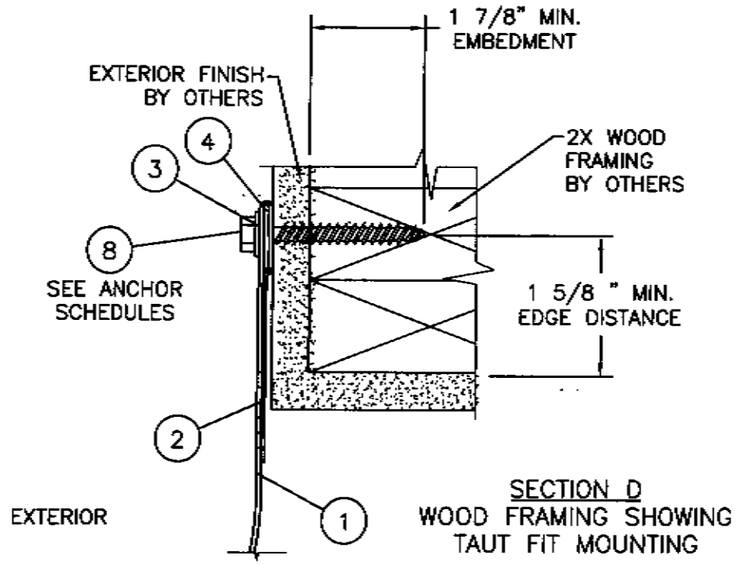

SECTION D
WOOD FRAMING SHOWING
TAUT FIT MOUNTING

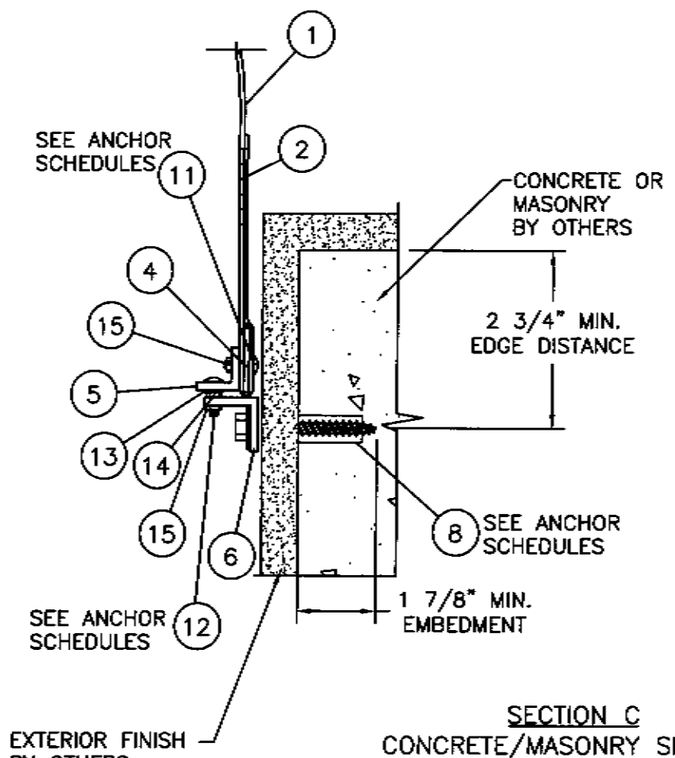

SECTION C
CONCRETE/MASONRY SHOWING
TAUT FIT MOUNTING

ANCHOR SCHEDULE – WOOD SUBSTRATE (MIN G=0.53)

ANCHOR TYPE	LOAD (PSF)	UP TO SPANS OF (IN)	ON CENTER DISTANCE BETWEEN ANCHORS (IN)
1/4" ITW TAPCON SG W/ 1½" MIN EMBEDMENT.	70	37"	8"
	70	56"	8"
	70	70"	8"
	70	97"	8"
	70	120"	8"
1/4" ELCO PANELMATE (MALE OR FEMALE) WITH 1⅜" MIN. EMBEDMENT	70	37"	8"
	70	56"	8"
	70	70"	8"
	70	97"	8"
	70	120"	8"
1/4" ELCO PANELMATE INSERT WITH 1⅝" MIN. EMBEDMENT	70	37"	8"
	70	56"	8"
	70	70"	8"
	70	97"	8"
	70	120"	8"
1/4" ELCO PANELMATE (TVAS) WITH 2" MIN. EMBEDMENT	70	37"	6"
	70	56"	6"
	70	70"	6"
	70	97"	6"
	70	120"	6"

ANCHOR SCHEDULE – CONCRETE SUBSTRATE (MIN 3000 PSI)

ANCHOR TYPE	LOAD (PSF)	UP TO SPANS OF (IN)	ON CENTER DISTANCE BETWEEN ANCHORS (IN)
1/4" ITW TAPCON SG W/ 1¾" MIN EMBEDMENT.	70	37"	8"
	70	56"	8"
	70	70"	8"
	70	97"	8"
	70	120"	8"
1/4" ELCO PANELMATE (MALE OR FEMALE) WITH 1⅜" MIN. EMBEDMENT	70	37"	8"
	70	56"	8"
	70	70"	8"
	70	97"	8"
	70	120"	8"
1/4" ELCO PANELMATE INSERT WITH 1⅝" MIN. EMBEDMENT	70	37"	8"
	70	56"	8"
	70	70"	8"
	70	97"	8"
	70	120"	8"
1/4" ELCO PANELMATE (TVAS) WITH 2" MIN. EMBEDMENT	70	37"	6"
	70	56"	6"
	70	70"	6"
	70	97"	6"
	70	120"	6"

ANCHOR SCHEDULE – HOLLOW BLOCK SUBSTRATE

ANCHOR TYPE	LOAD (PSF)	UP TO SPANS OF (IN)	ON CENTER DISTANCE BETWEEN ANCHORS (IN)
1/4" ITW TAPCON SG W/ 1¾" MIN EMBEDMENT.	70	37"	8"
	70	56"	8"
	70	70"	8"
	70	97"	8"
	70	120"	8"
1/4" ELCO PANELMATE (MALE OR FEMALE) WITH 1⅜" MIN. EMBEDMENT	70	37"	8"
	70	56"	8"
	70	70"	8"
	70	97"	8"
	70	120"	8"
1/4" ELCO PANELMATE INSERT WITH 1⅝" MIN. EMBEDMENT	70	37"	8"
	70	56"	8"
	70	70"	8"
	70	97"	8"
	70	120"	8"
1/4" ELCO PANELMATE (TVAS) WITH 1⅝" MIN. EMBEDMENT	70	37"	6"
	70	56"	6"
	70	70"	6"
	70	97"	6"
	70	120"	6"

ANCHOR SCHEDULE – SPECIAL ANCHORS AND INSTALLATION BOLTS

ANCHOR TYPE	LOAD (PSF)	UP TO SPANS OF (IN)	ON CENTER DISTANCE BETWEEN ANCHORS (IN)
SPECIAL ANGLE ANCHOR ONLY USED IN SECTION A, SHEET 2 WITH MOUNTING ANGLE TO CONCRETE SLAB	70	37"	8"
	70	56"	8"
3/8" DROP IN CONCRETE ANCHOR	70	70"	8"
	70	97"	8"
	70	120"	8"
SPECIAL ¼–20 ANGLE ANCHOR WINGNUT SS BOLT (#10, 11 &12 ON BOM)	70	37"	USE SAME SPACING USED TO ANCHOR RAIL TO SUBSTRATE. (12"MAX)
	70	56"	
1/4" STAINLESS STEEL BOLT	70	70"	
	70	97"	
	70	120"	

SYM	REVISION	DATE	BY
A	Revised anchor spacing to match Test Report	10/30/07	DJM

D J McDougall
Florida P. E. No. 28938
PTC, LLC
1535 Cogswell Street, Suite C25
Rockledge, Florida 32955
FBPE Certificate of Authorization NO. 25935

11-01-07

CAT 5 HURRICANE SCREENS, LLC.
TRINITY, FLORIDA

TITLE: WIND ABATEMENT SYSTEM
ANCHOR SCHEDULES AND CROSS SECTIONS

PREPARED BY:
PTC, LLC
Phone 321.690.1788 Fax 321.690.1789

DRN: HFN
DATE: 08/06/07
SCALE: N.T.S.
DWG. NO: CAT0003
REV:
SHEET: 3 OF 3