GENERAL NOTES: (IBC 2006 & IRC 2006 w/ 2006 TEXAS REVISIONS)

1- DEFINITION: THIS PRODUCT IS A STORM PANEL TYPE SHUTTER; DESIGNED, CONSTRUCTED AND ERECTED TO EASILY ENCLOSE AN AREA, PROVIDING PROTECTION FROM HURRICANE FORCE WINDS AND WIND BORNE DEBRIS WITHIN THE ALLOWABLE DESIGNED PRESSURES AND LIMITATIONS STATED IN THIS APPROVAL.

2- POSTING: A PERMANENT LABEL SHALL BE PROVIDED AS PER IBC 2006 SECTION 1703.5. IT SHALL BE PLACED ON A READILY VISIBLE LOCATION AND A MINIMUM OF ONE LABEL PER OPENING.

3- GLASS SEPARATION: PRODUCT IS QUALIFIED AS "NON POROUS", THEREFORE GLAZING SEPARATION IS NOT REQUIRED WITH EXCEPTION FOR THE FOLLOWING LOCATIONS:
- 3.1- WIND ZONE 4 AS DEFINED IN ASTM E 1996 (LOCATIONS WITH WIND GUST GREATER THAN 140 MPH)
- 3.2- ESSENTIAL FACILITIES AS DEFINED IN ASCE 7
- 3.3- PANELS SMALLER THAN 16" IN LENGTH (POROSITY >10%)

FOR ALL ABOVE CONDITIONS THE PRODUCT MUST BE SEPARATED AT MINIMUM 18" FROM GLAZING AREAS.

4- LOADS: DESIGNED LOAD CALCULATED BASED ON THE ASCE 7 AND PROVIDED BY A PROFESSIONAL ARCHITECT OR ENGINEER FOR EACH SPECIFIC PROJECT. THE CALCULATED DESIGNED PRESSURE MUST NOT EXCEED THE ALLOWABLE PRESSURES FOR EACH SHUTTER COMPONENT TO BE USED.

5- MATERIAL:
- 5.1 CLEAR STORM PANEL MADE OF 0.088 POLY CARBONATE SHEET (THICKNESS VARIES FROM 0.075" TO 0.095") LEXAN XL10 SP OR EQUAL
- 5.2 ALL EXTRUDED ALUMINUM SHAPES SHALL BE MADE OF 6063-T6 OR AS NOTED.

6- FASTENERS: ASSEMBLY SCREWS AND ANCHORS SHALL BE CORROSION RESISTANT AS SPECIFIED IN SECTION R325 (IRC 2006 TEXAS REVISIONS) AND CHAPTER 17 (IBC 2006 TEXAS REVISIONS). ANCHORS ARE TO BE SELECTED BASED ON AREA LOCATION (SEAWARD, INLAND I OR INLAND II)

7- USE: IT SHALL BE THE RESPONSIBILITY OF THE CONTRACTOR, ARCHITECT OR ENGINEER OF RECORD TO VERIFY THE FOLLOWING:
- 7.1- THE STABILITY OF THE STRUCTURE WHERE THE SHUTTER IS TO BE ATTACHED INSURING PROPER ANCHORAGE.
- 7.2- THE SITE SPECIFIC PROJECT CRITERIA, SUCH AS BUT NOT LIMITED TO, WIND LOADS, LOCAL CODE REQUIREMENTS, DESIGNED PRESSURES ETC.
- 7.3- THAT THIS APPROVAL IS ADEQUATE TO THE SPECIFIC PROJECT.

8- 33 1/3% INCREASE IN ALLOWABLE LOADS HAVE NOT BEEN USED IN THE DESIGN OF THE ANCHORS FOR THIS PRODUCT APPROVAL. HOWEVER, WOOD ANCHORS WITH 1.6 LOAD DURATION INCREASE FOR WIND LOAD HAVE BEEN USED.

CODE AND STANDARD COMPLIANCE:
INTERNATIONAL BUILDING CODE (IBC 2006) WITH TEXAS REVISIONS
INTERNATIONAL RESIDENTIAL CODE (IRC 2006) WITH TEXAS REVISIONS
ASTM E330, E1886, E1996 (LEVEL D MISSILE)

TABLE OF CONTENTS:

SHEET	CONTENTS
1	GENERAL NOTES & TYPICAL ELEVATIONS
2	PANEL DETAILS
3	ALLOWABLE DESIGN PRESSURES TABLES & PANEL COMPONENTS
4	ANCHOR SCHEDULE
5	MOUNT TYPE A DETAIL
6	MOUNT TYPES B & C DETAILS
7	MOUNT TYPES D & E DETAILS
8	MOUNT TYPES F & G DETAILS
9	MOUNT TYPE H DETAIL
10	MOUNT TYPE I DETAIL
11	SIDE CLOSURE SECTION J, K AND L DETAILS
12	INSTALLATION WITH 1/8-1X4 ALUMINUM TUBE

TYPICAL ELEVATIONS

PANELS CAN BE INSTALLED VERTICALLY OR HORIZONTALLY USING APPLICABLE ANCHORING DETAILS

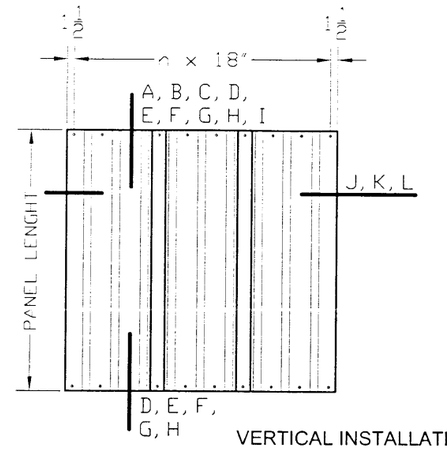

VERTICAL INSTALLATION

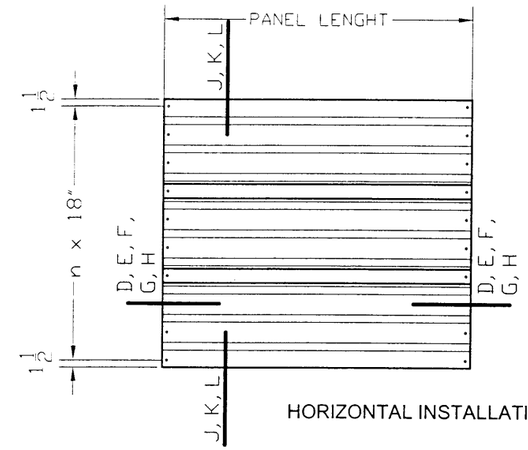

HORIZONTAL INSTALLATION

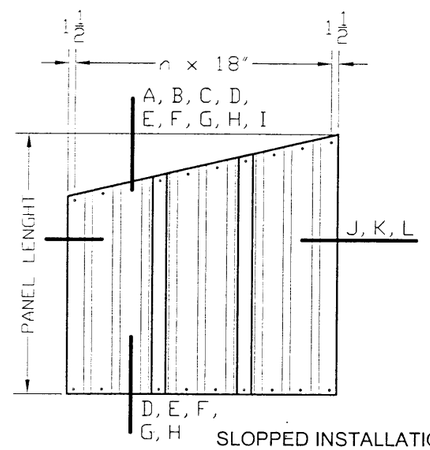

SLOPPED INSTALLATION

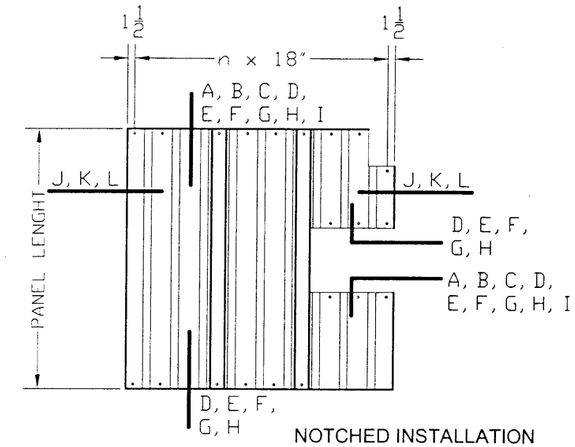

NOTCHED INSTALLATION

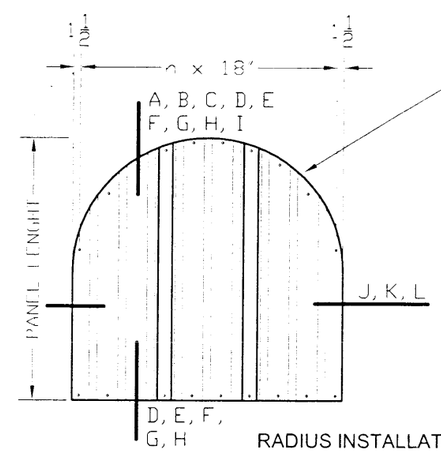

RADIUS INSTALLATION

RADIUS CAN BE DESIGNED IN FOUR OPTIONS:

1- MOUNTS C, D, E, F, G, I
SLICE TRACK TO CONFORM CURVATURE WITH 6" MINIMUM SLICE AND W/ MIN. 1 ANCHOR PER SLICE

2- MOUNTS A, B, C, D, E, F, G, I
TRACK CAN BE SLICED AND WELDED INTO ONE PIECE

3- MOUNTS A, B, C, D, E, F, G, I
TRACK CAN BE BENT INTO ONE PIECE

4- MOUNT H
PANELS CUT TO RADIUS AND DIRECT MOUNTED AT 6"OC

MANUFACTURER:
LOOKOUT
Shutters, Inc.
1268 MAULDIN ROAD
CALHOUN, GA 30701
Tel.: (877) 200-0234
Fax: (706) 602-6922

PRODUCT:
LOOKOUT
CLEAR STORM PANEL
LEXAN CORRUGATED SHEET

Engineering:
EngCo Inc.
CR 11234
6971 W. Sunrise Blvd. 104
Plantation, Fl. 33313
ENGCO@AOL.COM

STATE OF TEXAS
PEDRO FIGUEIREDO
102937
LICENSED
PROFESSIONAL ENGINEER

JUL 29 2009

Engineer Seal
Pedro De Figueiredo
TEXAS - PE 102937

DRAFTING:
PK DRAFTING & MORE

Date: 7/19/09
Scale: NA
Design by: PPMF

Drawing Number
09-174

PANEL DETAILS

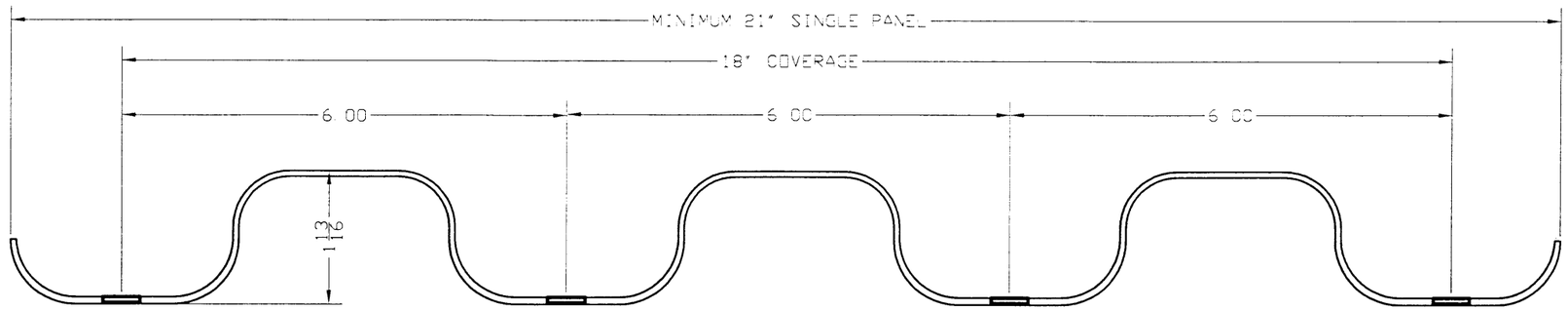

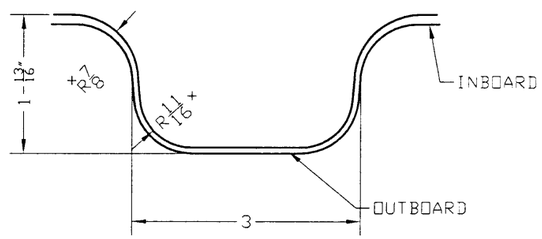

1- CLEAR STORM PANEL
MADE OF 0.088 POLYCARBONATE SHEET
(THICKNESS VARIES FROM 0.075" TO 0.095")
LEXAN XL10 SP OR EQUAL

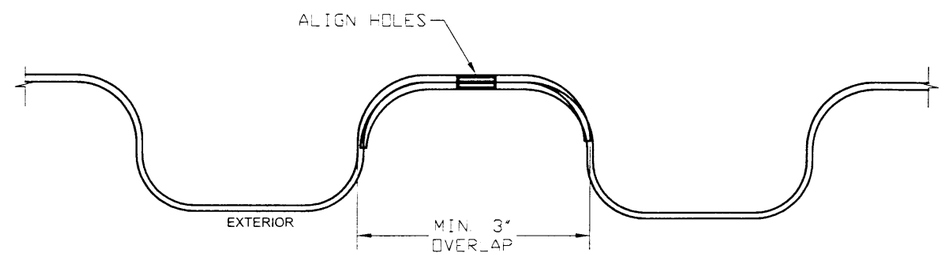

1A- PANELS LAP JOINTS

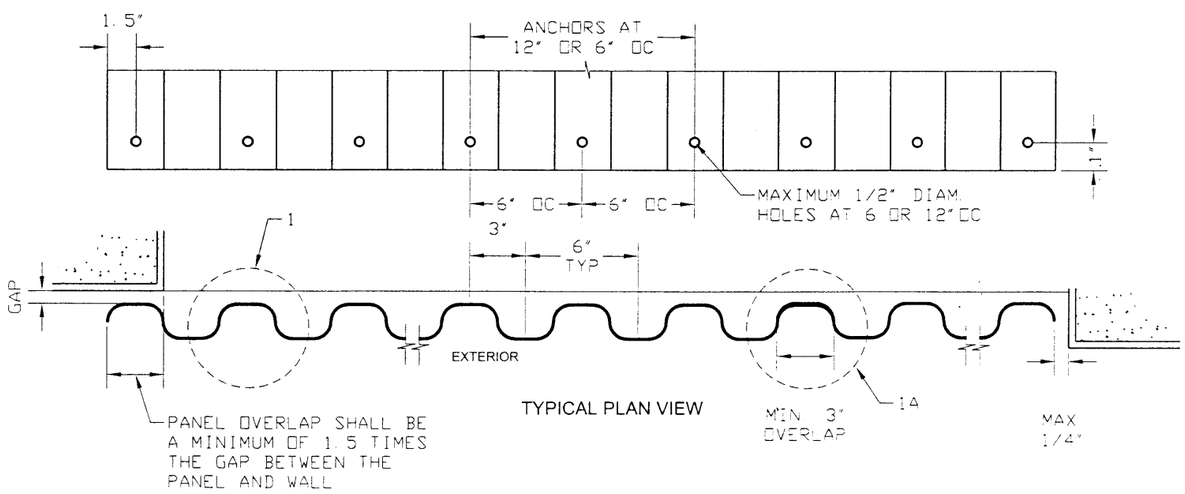

TYPICAL PLAN VIEW

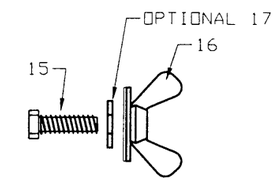

12- BOLT & WINGNUT
1/4-20X3/4" HHMS (15) AND
WING NUT (16)

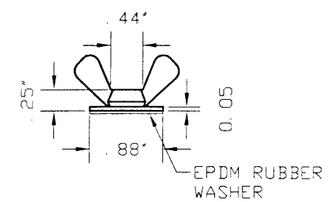

16- "LOOK LOK" WING NUT
ZAMAC 3 ALLOY

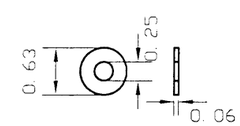

17- OPTIONAL RUBBER WASHER
60 DUROMETER RUBBER
TO BE USED WITH 16

PANEL NOTES:

1- PANELS CAN BE OVERLAPPED TO CREATE A 1/2 PANEL INSTALLATION.
2- PANELS CAN BE BENT TO CONFORME INSTALLATION IN BAY WINDOWS AND CORNER OPENINGS.
3- SINGLE PANEL WIDTH AVAILABLE AT 21", 27", 33", 39", 45", 51" AND 57"
4- LESS THAN 21" PANELS CAN BE USED AS END OVERLAP PANELS BUT NOT AS A SINGLE APPLICATION PANEL

MANUFACTURER:
LOOKOUT
Shutters, Inc.
1268 MAULDIN ROAD
CALHOUN, GA 30701
Tel.: (877) 200-0234
Fax: (706) 602-6922

PRODUCT:
LOOKOUT
CLEAR STORM PANEL
LEXAN CORRUGATED SHEET

Engineering:
EngCo Inc.
CR 11234
6971 W. Sunrise Blvd. 104
Plantation, Fl. 33313
ENGCO@AOL.COM

Engineer Seal
Pedro De Figueiredo
TEXAS - PE 102937

DRAFTING:
PK DRAFTING & MORE

Date: 7/19/09
Scale: NA
Design by: PPMF

Drawing Number
09-174

TABLE 1: PRODUCT RATING: MOUNTING TYPE A, B AND C

POSITIVE & NEGATIVE MAXIMUM PRESSURE (psf)	MAXIMUM PANEL LENGTH (in)
26	108
35	93
40	87
45	82
50	78
55	74
60	71
70	66
75	64
80	62
85	59
90	55
100	50
104	48

TABLE 2: PRODUCT RATING: MOUNTING TYPE D, E, F, G, H, I

POSITIVE & NEGATIVE MAXIMUM PRESSURE (psf)	MAXIMUM PANEL LENGTH (in)
40	144
45	128
50	115
55	105
60	96
70	82
75	77
80	72
85	68
90	64
100	54
104	48

VALID FOR PANEL BOLTS AT 12"OC

TABLE 3: PRODUCT RATING: MOUNTING TYPE D, E, F, G, H, I

POSITIVE & NEGATIVE MAXIMUM PRESSURE (psf)	MAXIMUM PANEL LENGTH (in)
75	144
80	127
85	111
90	94
100	61
104	48

VALID ONLY FOR PANEL BOLTS AT 6"OC

NOTES:
1- PANELS OVERLAP: WARNING LABELS SHALL BE PLACED IN A CONSPICUOUS LOCATION ON ANY OF THE COMPONENTS OF THE STORM PANEL SYSTEM ADVISING THE USER THAT THE STORM PANELS WILL NOT OFFER HURRICANE PROTECTION UNLESS 3" MINIMUM OVERLAP IS PROVIDED.
2- WARNING LABELS SHALL BE MECHANICALLY FASTENED OR FIXED WITH PERMANENT ADHESIVE.
3- FOR DESIGN LOADS BETWEEN TABULATED VALUES, USE NEXT HIGHER LOAD OR LINEAR INTERPOLATION MAY BE USED TO DETERMINE ALLOWABLE SPANS.
4- SINGLE MODULE PANELS ARE LIMITED BY 21" MINIMUM WIDTH AND 16" MINIMUM PANEL LENGHT.

PANEL COMPONENTS

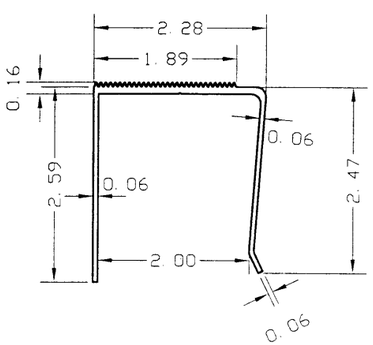

1- "U" HEADER
ALUMINUM 6063-T6

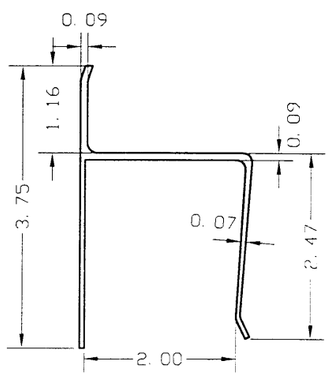

2- "h" HEADER
ALUMINUM 6063-T6

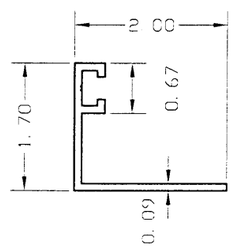

3- "F" ANGLE TRACK
ALUMINUM 6063-T6

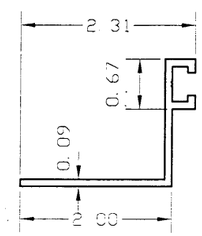

4- "F" ANGLE TRACK
REVERSED
ALUMINUM 6063-T6

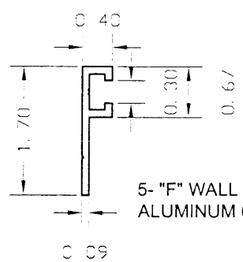

5- "F" WALL TRACK
ALUMINUM 6063-T6

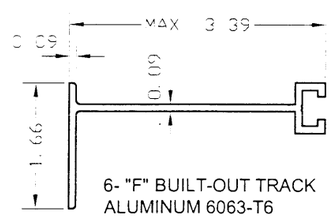

6- "F" BUILT-OUT TRACK
ALUMINUM 6063-T6

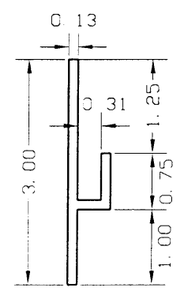

7- HOOK TRACK
ALUMINUM 6063-T6

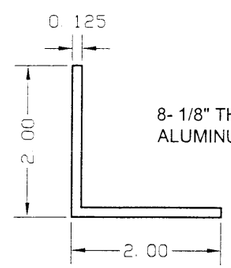

8- 1/8" THICK ANGLE
ALUMINUM 6063-T6

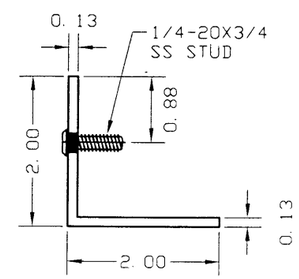

9- STUD ANGLE TRACK
CAN BE USED AS AN ALTERNATE TO "F" ANGLE TRACK
ALUMINUM 6063-T6

MANUFACTURER:
LOOKOUT
Shutters, Inc.
1268 MAULDIN ROAD
CALHOUN, GA 30701
Tel.: (877) 200-0234
Fax: (706) 602-6922

PRODUCT:
LOOKOUT
CLEAR STORM PANEL
LEXAN CORRUGATED SHEET

Engineering:
EngCo Inc.
CR 11234
6971 W. Sunrise Blvd. 104
Plantation, Fl. 33313
ENGCO@AOL.COM

STATE OF TEXAS
PEDRO FIGUEIREDO
102937
LICENSED PROFESSIONAL ENGINEER

JUL 28 2009

Engineer Seal
Pedro De Figueiredo
TEXAS - PE 102937

DRAFTING:
PK DRAFTING & MORE

Date: 7/19/09
Scale: NA
Design by: PPMF

Drawing Number
09-174

TABLE 4 - ANCHORS SCHEDULE

	TYPE	DESCRIPTION	EMBEDMENT	EDGE DISTANCE
3000 PSI CONCRETE	C1	1/4" ULTRACON ELCO	1.75	2.5
	C2	1/4" TAPCONS ITW	1.75	2.5
	C3	1/4" SS TAPCON BY ITW BUILDEX	1.75	2.5
	C4	1/4" SS AGGRE-GATOR BY ELCO	1.75	3
	C5	1/4" CRETE-FLEXX SS4 BY ELCO	1.75	2.5
	C6	1/4"-20 SOLID SET ANCHOR BY ALL POINTS	0.875	3
	C7	1/4" PANELMATE INSERTS	1.625	4
	C8	1/4" PANELMATE PLUS BY ELCO	2	2.5
	C9	1/4"-20 CALK-IN ANCHOR BY POWERS	0.875	3
	C10	1/4" TAPCONS SG BY ITW	1.75	2.5
HOLLOW BLOCK	HB1	1/4" ULTRACON ELCO	1.25	2.5
	HB2	1/4" TAPCONS ITW	1.25	2.5
	HB3	1/4" SS TAPCON BY ITW BUILDEX	1.25	2.5
	HB4	1/4" SS AGGRE-GATOR BY ELCO	1.25	4
	HB5	1/4" CRETE-FLEXX SS4 BY ELCO	1.25	2.5
	HB6	1/4"-20 SOLID SET ANCHOR BY ALL POINTS	0.875	3
	HB7	1/4" PANELMATE INSERTS	1.25	4
	HB8	1/4" PANELMATE PLUS BY ELCO	1.25	3
	HB9	1/4"-20 CALK-IN ANCHOR BY POWERS	0.875	3
	HB10	1/4" TAPCONS SG BY ITW	1.25	2.5
WOOD G>=0.55	W1	1/4" LAG SCREWS	1.5	0.75
	W2	#14 WOOD SCREWS 1/4" TAPCON BY ITW 1/4" ULTRACON BY ELCO 1/4" SS TAPCONS BY ITW 1/4" SS AGRE-GATOR BY ELCO 1/4" CRETE-FLEX BY ELCO	1.5	0.75
	W3	1/4" PANELMATE PLUS BY ELCO	1.875	0.75
	W4	1/4" PANELMATE INSERTS	1.625	0.75
	W5	1/4"-20 BRASS BUSHING	0.625	0.75
METAL	M1	1/4-14 SDS INTO 1/8" 6063-T6 ALUMINUM		0.5
	M2	1/4-14 SDS INTO 16GA ASTM A36 STEEL		0.375

NOTES:
1- EMBEDMENT AND EDGE DISTANCE ARE BEYOND WALL DRESSING.
2- USE THE ANCHOR SCHEDULE ABOVE ON TABLES 5 THROUGH 10 TO OBTAIN THE MAXIMUM ANCHOR CAPACITY IN PSF (-/+) FUNCTION OF PANEL LENGTH (L) IN INCHES AND ANCHORAGE SPACING.
3- ANCHOR SELECTION MUST BE IN COMPLIANCE WITH GENERAL NOTE 6 ON SHEET 1.

MANUFACTURER:
LOOKOUT
Shutters, Inc.
1268 MAULDIN ROAD
CALHOUN, GA 30701
Tel.: (877) 200-0234
Fax: (706) 602-6922

PRODUCT:
LOOKOUT
CLEAR STORM PANEL
LEXAN CORRUGATED SHEET

Engineering:
EngCo Inc.
CR 11234
6971 W. Sunrise Blvd. 104
Plantation, Fl. 33313
ENGCO@AOL.COM

Engineer Seal
Pedro De Figueiredo
TEXAS - PE 102937

DRAFTING:
PK DRAFTING & MORE

Date: 7/19/09
Scale: NA
Design by: PPMF

Drawing Number
09-174

TYPICAL SECTIONS

AND ANCHORAGE SPACING X ALLOWABLE PRESSURE

SECTION A
"h" TRACK MOUNT

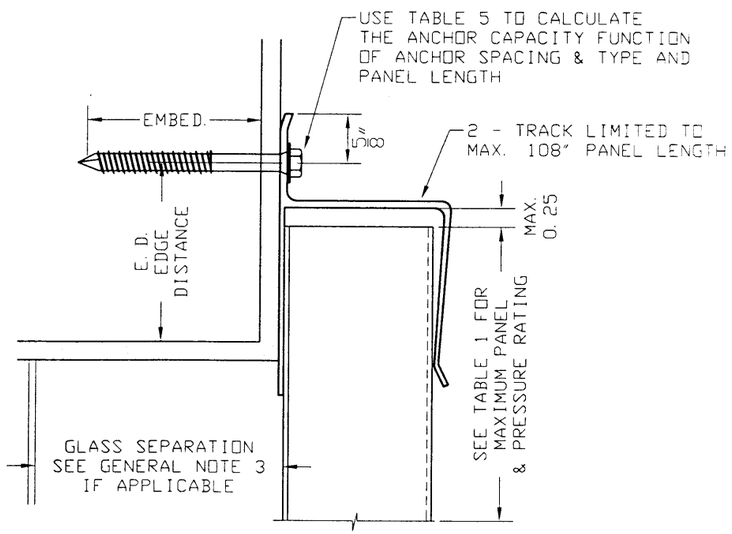

TABLE 5 - MOUNT TYPE A - MAXIMUM ANCHOR CAPACITY (PSF) X ANCHOR SPACING X PANEL LENGTH

3000 PSI CONCRETE		12" OC							8" OC							6" OC						
L																						
in		C1	C2	C3	C4	C5	C6	C9	C1	C2	C3	C4	C5	C6	C9	C1	C2	C3	C4	C5	C6	C9
108		24	26	26	26	26	26	26	26	26	26	26	26	26	26	26	26	26	26	26	26	26
93		28	31	30	30	33	32	31	35	35	35	35	35	35	35	35	35	35	35	35	35	35
87		30	34	32	32	35	34	33	40	40	40	40	40	40	40	40	40	40	40	40	40	40
82		31	36	34	34	37	36	35	45	45	45	45	45	45	45	45	45	45	45	45	45	45
78		33	38	36	36	39	38	37	50	50	50	50	50	50	50	50	50	50	50	50	50	50
74		35	39	38	38	41	40	39	52	55	55	55	55	55	55	55	55	55	55	55	55	55
71		36	41	39	39	43	42	40	54	60	59	59	60	60	60	60	60	60	60	60	60	60
66		39	45	42	43	46	45	43	59	67	64	64	69	67	65	70	70	70	70	70	70	70
64		41	46	44	44	48	46	45	61	69	66	66	72	70	68	75	75	75	75	75	75	75
62		42	48	45	46	49	48	46	63	71	68	68	74	72	70	80	80	80	80	80	80	80
59		44	50	48	48	52	50	49	66	75	71	72	78	75	73	85	85	85	85	85	85	85
55		46	53	50	51	55	53	52	70	79	75	76	82	80	77	90	90	90	90	90	90	90
50		52	59	56	56	61	59	57	77	88	84	84	91	89	86	100	100	100	100	100	100	100
48		54	61	58	58	63	62	60	81	92	87	88	95	92	89	104	104	104	104	104	104	104

HOLLOW BLOCK		8" OC							6" OC							4" OC						
L																						
in		HB1	HB2	HB3	HB4	HB5	HB6	HB9	HB1	HB2	HB3	HB4	HB5	HB6	HB9	HB1	HB2	HB3	HB4	HB5	HB6	HB9
108		13	15	12	17	23	26	13	18	20	16	22	26	26	18	26	26	24	26	26	26	26
93		15	17	14	19	27	35	15	20	23	19	26	35	35	20	31	34	28	35	35	35	31
87		16	18	15	21	29	37	16	22	24	20	28	38	40	22	33	36	30	40	40	40	33
82		17	19	16	22	30	39	17	23	26	21	29	40	45	23	35	39	32	44	45	45	35
78		18	20	17	23	32	41	18	24	27	22	31	43	50	24	37	41	33	46	50	50	37
74		19	21	18	24	33	43	19	26	29	23	32	45	55	26	38	43	35	48	55	55	38
71		20	22	18	25	35	45	20	27	30	24	34	47	60	27	40	45	37	51	60	60	40
66		22	24	20	27	38	49	22	29	32	26	36	50	65	29	43	48	40	55	70	70	43
64		22	25	20	28	39	51	22	30	33	27	38	52	67	30	45	50	41	57	75	75	45
62		23	26	21	29	40	52	23	31	34	28	39	54	70	31	46	52	42	58	80	80	46
59		24	27	22	31	42	55	24	32	36	30	41	56	73	32	49	54	44	61	85	85	49
55		26	29	23	32	45	58	26	34	38	31	43	60	77	34	51	57	47	65	90	90	51
50		29	32	26	36	50	64	29	38	42	35	48	66	86	38	57	64	52	72	100	100	57
48		30	33	27	38	52	67	30	40	44	36	50	69	89	40	59	66	54	75	104	104	59

WOOD G>=0.55 METAL STRUCTURES		12" OC					8" OC					6" OC					4" OC				
L																					
in		W1	W2	W5	M1	M2	W1	W2	W5	M1	M2	W1	W2	W5	M1	M2	W1	W2	W5	M1	M2
108		26	25	12	13	11	26	26	17	20	16	26	26	23	26	21	26	26	26	26	26
93		35	29	13	15	12	35	35	20	23	19	35	35	27	30	25	35	35	35	35	35
87		39	31	14	16	13	40	40	22	24	20	40	40	29	32	26	40	40	40	40	40
82		41	33	15	17	14	45	45	23	26	21	45	45	31	34	28	45	45	45	45	42
78		43	35	16	18	15	50	50	24	27	22	50	50	32	36	30	50	50	48	50	44
74		45	36	17	19	16	55	55	25	29	23	55	55	34	38	31	55	55	51	55	47
71		47	38	18	20	16	60	57	26	30	24	60	60	35	40	32	60	60	53	60	49
66		51	41	19	21	17	70	62	29	32	26	70	70	38	43	35	70	70	57	64	52
64		53	43	20	22	18	75	64	30	33	27	75	75	39	44	36	75	75	59	67	54
62		55	44	20	23	19	80	66	31	34	28	80	80	41	46	37	80	80	61	69	56
59		57	46	21	24	20	85	69	32	36	29	85	85	43	48	39	85	85	64	72	59
55		61	49	23	25	21	90	73	34	38	31	90	90	45	51	42	90	90	68	76	62
50		68	54	25	28	23	100	81	38	42	35	100	100	50	57	46	100	100	75	85	69
48		70	56	26	29	24	104	85	39	44	36	104	104	52	59	48	104	104	78	88	72

L - PANEL LENGTH IN INCHES
USE TABLE 4 TO SELECT ANCHOR TYPE

EXAMPLE:
PANEL HEIGHT: L=48"
MAXIMUM PRESSURE: Pd= ±52 PSF
MOUNT TYPE: A
ANCHOR TYPE W5 - SEE TABLE 4
ANCHOR SPACING: 6" OC
EDGE DISTANCE - 3/4"
EMBEDMENT: 5/8"

MANUFACTURER:
LOOKOUT
Shutters, Inc.
1268 MAULDIN ROAD
CALHOUN, GA 30701
Tel.: (877) 200-0234
Fax: (706) 602-6922

PRODUCT:
LOOKOUT
CLEAR STORM PANEL
LEXAN CORRUGATED SHEET

Engineering:
EngCo Inc.
CR 11234
6971 W. Sunrise Blvd. 104
Plantation, Fl. 33313
ENGCO@AOL.COM

JUL 2 8 2009

Engineer Seal
Pedro De Figueiredo
TEXAS - PE 102937

DRAFTING:
PK DRAFTING & MORE

Date: 7/19/09
Scale: NA
Design by: PPMF

Drawing Number
09-174

TYPICAL SECTIONS AND ANCHORAGE SPACING

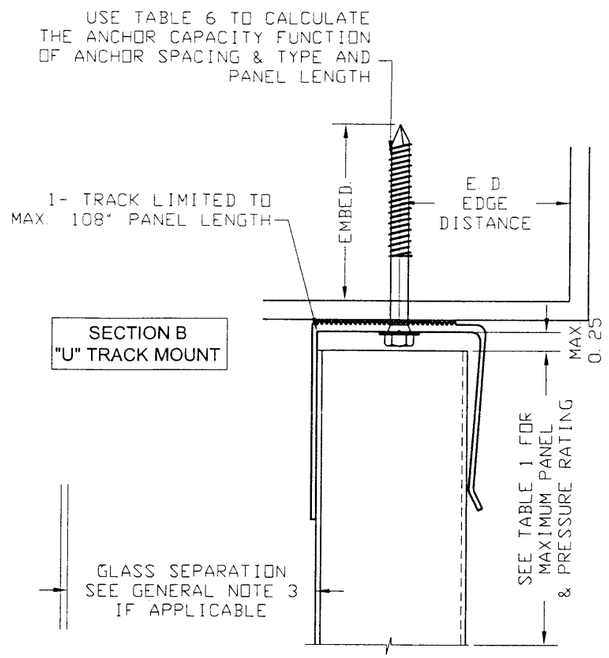

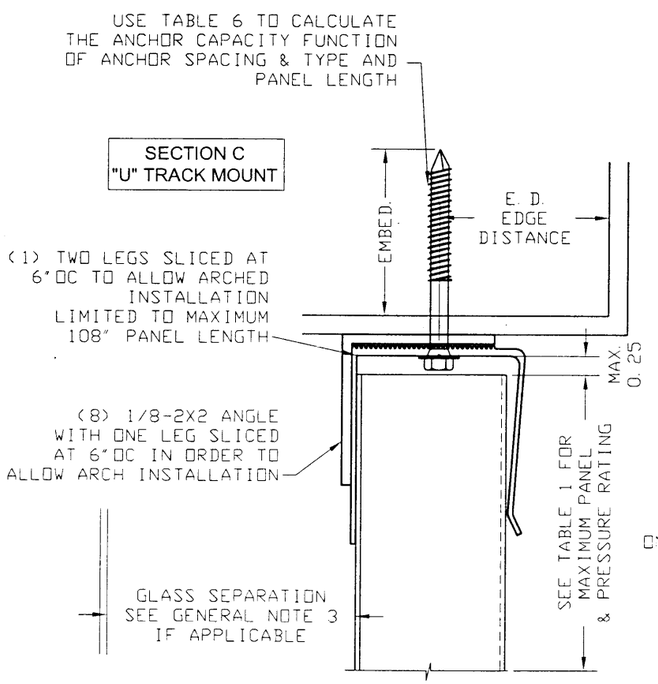

TABLE 6 - MOUNT TYPE B or C - MAXIMUM ANCHOR CAPACITY (PSF) X ANCHOR SPACING X PANEL LENGTH

3000 PSI CONCRETE	12" OC								10" OC								8" OC							
L in	C1	C2	C3	C4	C5	C6	C7	C9	C1	C2	C3	C4	C5	C6	C7	C9	C1	C2	C3	C4	C5	C6	C7	C9
108	26	26	26	26	26	26	26	26	26	26	26	26	26	26	26	26	26	26	26	26	26	26	26	26
93	35	35	35	35	35	35	35	35	35	35	35	35	35	35	35	35	35	35	35	35	35	35	35	35
87	40	40	40	40	40	40	40	40	40	40	40	40	40	40	40	40	40	40	40	40	40	40	40	40
82	45	45	45	45	45	45	44	43	45	45	45	45	45	45	45	45	45	45	45	45	45	45	45	45
78	47	47	50	50	50	50	47	46	50	50	50	50	50	50	50	50	50	50	50	50	50	50	50	50
74	50	50	52	54	55	55	49	48	55	55	55	55	55	55	55	55	55	55	55	55	55	55	55	55
71	52	52	55	57	60	60	51	50	60	60	60	60	60	60	60	60	60	60	60	60	60	60	60	60
66	56	56	59	61	69	67	55	54	67	67	70	70	70	70	67	65	70	70	70	70	70	70	70	70
64	58	58	61	63	71	69	57	56	70	70	73	75	75	75	69	68	75	75	75	75	75	75	75	75
62	60	60	63	66	73	71	59	58	72	72	76	79	80	80	71	70	80	80	80	80	80	80	80	80
59	63	63	66	69	77	75	62	61	76	75	80	83	85	85	75	73	85	85	85	85	85	85	85	85
55	67	67	70	73	81	79	66	64	80	80	84	88	90	90	79	77	90	90	90	90	90	90	90	90
50	74	74	78	81	90	88	73	72	89	89	94	97	100	100	88	86	100	100	100	100	100	100	100	100
48	77	77	81	84	94	92	76	75	93	92	97	101	104	104	92	90	104	104	104	104	104	104	104	104

HOLLOW BLOCK	8" OC								6" OC								4" OC							
L in	HB1	HB2	HB3	HB4	HB5	HB6	HB7	HB9	HB1	HB2	HB3	HB4	HB5	HB6	HB7	HB9	HB1	HB2	HB3	HB4	HB5	HB6	HB7	HB9
108	23	23	20	26	26	26	26	21	26	26	26	26	26	26	26	26	26	26	26	26	26	26	26	26
93	27	27	24	30	35	35	35	25	35	35	32	35	35	35	35	33	35	35	35	35	35	35	35	35
87	29	29	25	32	40	40	40	26	39	39	34	40	40	40	40	35	40	40	40	40	40	40	40	40
82	31	31	27	34	45	45	45	28	41	41	36	45	45	45	45	38	45	45	45	45	45	45	45	45
78	32	33	28	36	48	50	50	30	43	44	38	48	50	50	50	40	50	50	50	50	50	50	50	50
74	34	34	30	37	50	55	55	31	45	46	40	50	55	55	55	42	55	55	55	55	55	55	55	55
71	35	36	31	39	52	60	59	32	47	48	42	52	60	60	60	43	60	60	60	60	60	60	60	60
66	38	39	34	42	57	70	64	35	51	52	45	57	70	70	70	47	70	70	68	70	70	70	70	70
64	40	40	35	44	59	74	67	36	53	53	47	59	75	75	75	49	75	75	70	75	75	75	75	73
62	41	41	36	45	61	77	69	38	55	55	48	60	80	80	80	50	80	80	72	80	80	80	80	76
59	43	43	38	47	64	81	72	39	58	58	51	63	85	85	85	53	85	85	76	85	85	85	85	79
55	46	46	40	50	67	85	76	42	61	61	54	67	90	90	90	56	90	90	81	90	90	90	90	84
50	51	51	45	56	75	95	85	46	68	68	60	75	100	100	100	62	100	100	90	100	100	100	100	93
48	53	53	46	58	78	99	88	48	71	71	62	78	104	104	104	65	104	104	93	104	104	104	104	97

WOOD G>=0.55 METAL STRUCTURES	12" OC					8" OC					6" OC					4" OC				
L in	W1	W2	W5	M1	M2	W1	W2	W5	M1	M2	W1	W2	W5	M1	M2	W1	W2	W5	M1	M2
108	25	26	17	24	20	26	26	25	26	26	26	26	26	26	26	26	26	26	26	26
93	29	33	19	28	23	35	35	29	35	35	35	35	35	35	35	35	35	35	35	35
87	31	35	21	30	25	40	40	31	40	38	40	40	40	40	40	40	40	40	40	40
82	33	37	22	32	26	45	45	33	45	40	45	45	45	45	45	45	45	45	45	45
78	35	39	23	33	28	50	50	35	50	42	50	50	47	50	50	50	50	50	50	50
74	37	41	25	35	29	55	55	37	53	44	55	55	50	55	55	55	55	55	55	55
71	38	43	26	37	31	58	60	39	55	46	60	60	52	60	60	60	60	60	60	60
66	41	47	28	40	33	62	70	42	60	50	70	70	56	70	67	70	70	70	70	70
64	43	48	29	41	34	64	73	43	62	52	75	75	58	75	69	75	75	75	75	75
62	44	50	30	42	35	66	75	45	64	53	80	80	60	80	71	80	80	80	80	80
59	46	53	31	44	37	70	79	47	67	56	85	85	63	85	75	85	85	85	85	85
55	49	56	33	47	39	74	84	50	71	59	90	90	66	90	79	90	90	90	90	90
50	55	62	37	52	44	82	93	55	79	66	100	100	74	100	88	100	100	100	100	100
48	57	64	38	54	45	85	97	58	82	68	104	104	77	104	91	104	104	104	104	104

L - PANEL LENGTH IN INCHES
USE TABLE 4 TO SELECT ANCHOR TYPE

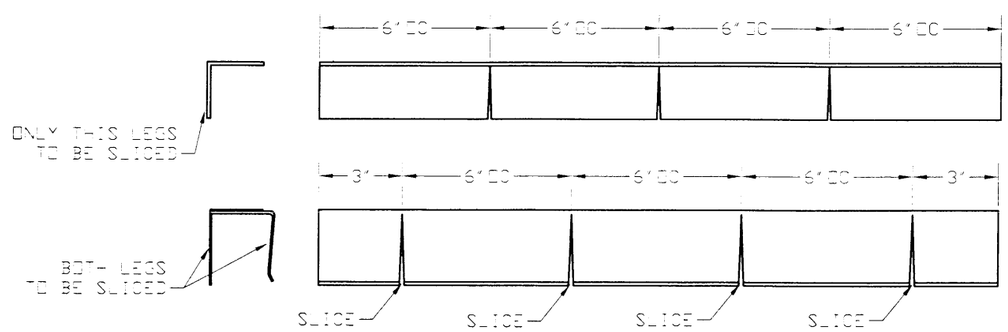

EXAMPLE:
PANEL HEIGHT: L=48"
MAXIMUM PRESSURE: Pd= ±104 PSF
MOUNT TYPE: B OR C
ANCHOR TYPE HB6 - SEE TABLE 4
ANCHOR SPACING: 4" OC
EDGE DISTANCE: 3"
EMBEDMENT: 0.875"

MANUFACTURER:
LOOKOUT
Shutters, Inc.
1268 MAULDIN ROAD
CALHOUN, GA 30701
Tel.: (877) 200-0234
Fax: (706) 602-6922

PRODUCT:
LOOKOUT
CLEAR STORM PANEL
LEXAN CORRUGATED SHEET

Engineering:
EngCo Inc.
CR 11234
6971 W. Sunrise Blvd. 104
Plantation, Fl. 33313
ENGCO@AOL.COM

STATE OF TEXAS
PEDRO FIGUEIREDO
102937
LICENSED
PROFESSIONAL ENGINEER

Engineer Seal
Pedro De Figueiredo
TEXAS - PE 102937

DRAFTING:
PK DRAFTING & MORE

Date: 7/19/09
Scale: NA
Design by: PPMF

Drawing Number
09-174

TYPICAL SECTIONS AND ANCHORAGE SPACING

SECTION D
"F" TRACK MOUNT

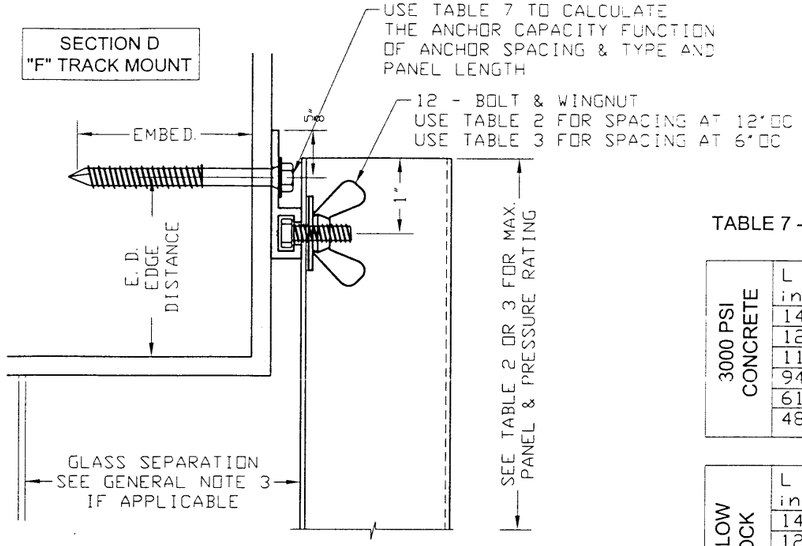

**: SIDE, TOP OR BOTTOM
ALTERNATE INSTALLATION APPLICABLE

EXAMPLE:
PANEL HEIGHT: L=144"
MAXIMUM PRESSURE: Pd= ±75 PSF
MOUNT TYPE: D or E
ANCHOR TYPE C6 - SEE TABLE 4
ANCHOR SPACING: 6" OC
EDGE DISTANCE - 4"
EMBEDMENT: 1.625"

TABLE 7 - MOUNT TYPE D or E - MAXIMUM ANCHOR CAPACITY (PSF) X ANCHOR SPACING X PANEL LENGTH

	L	12" OC								8" OC								6" OC							
	in	C1	C2	C3	C4	C5	C6	C7	C9	C1	C2	C3	C4	C5	C6	C7	C9	C1	C2	C3	C4	C5	C6	C7	C9
3000 PSI CONCRETE	144	36	41	39	39	43	41	35	40	54	62	59	59	64	62	53	60	72	75	75	75	75	75	71	75
	127	41	46	44	44	48	47	40	45	61	70	66	67	72	70	60	68	80	80	80	80	80	80	80	80
	111	47	53	51	51	55	54	46	52	71	80	76	77	83	81	70	78	85	85	85	85	85	85	85	85
	94	55	63	60	60	65	63	54	61	83	90	90	90	90	90	82	90	90	90	90	90	90	90	90	90
	61	85	97	92	93	100	98	84	95	100	100	100	100	100	100	100	100	100	100	100	100	100	100	100	100
	48	104	104	104	104	104	104	104	104	104	104	104	104	104	104	104	104	104	104	104	104	104	104	104	104

	L	8" OC								6" OC								4" OC							
	in	HB1	HB2	HB3	HB4	HB5	HB6	HB7	HB9	HB1	HB2	HB3	HB4	HB5	HB6	HB7	HB9	HB1	HB2	HB3	HB4	HB5	HB6	HB7	HB9
HOLLOW BLOCK	144	20	22	18	25	35	45	37	20	26	29	24	33	46	60	49	26	40	44	36	50	70	75	74	40
	127	22	25	20	28	39	51	41	22	30	33	27	38	52	68	55	30	45	50	41	57	79	80	80	45
	111	26	29	23	33	45	59	48	26	34	38	31	44	60	78	64	34	52	58	47	66	85	85	85	52
	94	30	34	28	38	53	69	56	30	41	45	37	51	71	90	75	41	61	68	56	77	90	90	90	61
	61	47	52	43	59	82	100	87	47	63	70	57	79	100	100	100	63	94	100	86	100	100	100	100	94
	48	60	67	55	76	104	104	104	60	80	89	73	101	104	104	104	80	104	104	104	104	104	104	104	104

	L	12" OC						8" OC						6" OC						4" OC					
	in	W1	W2	W4	W5	M1	M2	W1	W2	W4	W5	M1	M2	W1	W2	W4	W5	M1	M2	W1	W2	W4	W5	M1	M2
WOOD G>=0.55 METAL STRUC.	144	47	38	21	17	19	16	71	57	32	26	29	24	75	75	42	35	39	32	75	75	64	53	59	48
	127	53	43	24	20	22	18	80	64	36	30	33	27	80	80	48	40	45	36	80	80	72	60	67	55
	111	61	49	27	23	25	21	85	74	41	34	38	31	85	85	55	46	51	42	85	85	83	69	77	63
	94	72	58	32	27	30	24	90	87	49	40	45	37	90	90	65	54	60	49	90	90	90	81	90	74
	61	100	90	50	41	46	38	100	100	75	62	70	57	100	100	100	83	93	76	100	100	100	100	100	100
	48	104	104	64	53	59	48	104	104	96	79	89	73	104	104	104	104	104	97	104	104	104	104	104	104

L - PANEL LENGTH IN INCHES
USE TABLE 4 TO SELECT ANCHOR TYPE

EXAMPLE:
PANEL HEIGHT: L=48"
MAXIMUM PRESSURE: Pd= ±89 PSF
MOUNT TYPE: D or E
ANCHOR TYPE M1 - SEE TABLE 4
ANCHOR SPACING: 8" OC
EDGE DISTANCE - 1/2"
EMBEDMENT: INTO 1/8" ALUM.

SECTION E
"F" BUILT-OUT
TRACK MOUNT

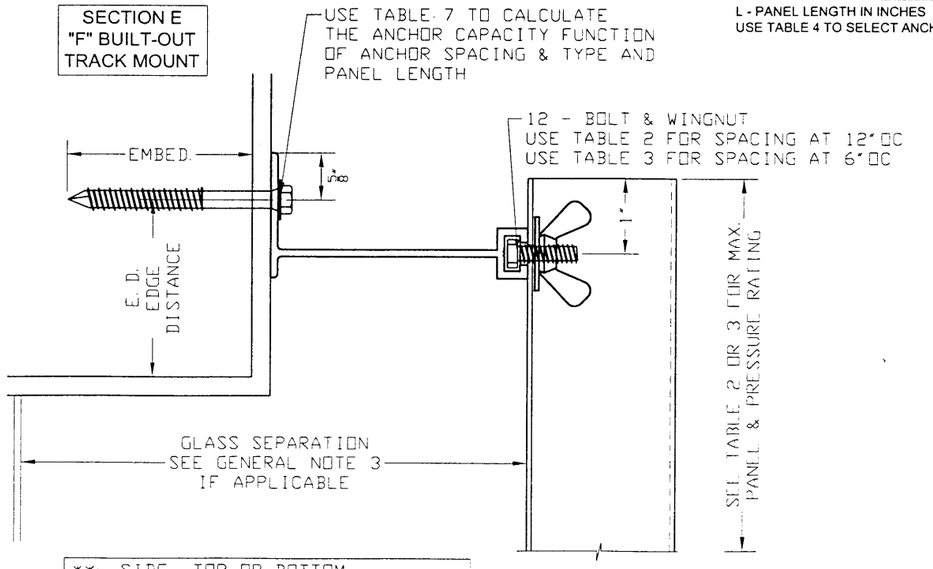

** SIDE, TOP OR BOTTOM
ALTERNATE INSTALLATION APPLICABLE

MANUFACTURER:
LOOKOUT
Shutters, Inc.
1268 MAULDIN ROAD
CALHOUN, GA 30701
Tel.: (877) 200-0234
Fax: (706) 602-6922

PRODUCT:
LOOKOUT
CLEAR STORM PANEL
LEXAN CORRUGATED SHEET

Engineering:
EngCo Inc.
CR 11234
6971 W. Sunrise Blvd. 104
Plantation, Fl. 33313
ENGCO@AOL.COM

JUL 28 2009

Engineer Seal
Pedro De Figueiredo
TEXAS - PE 102937

DRAFTING
PK DRAFTING & MORE

Date: 7/19/09
Scale: NA
Design by: PPMF

Drawing Number
09-174

TYPICAL SECTIONS AND ANCHORAGE SPACING

SECTION F
"F" ANGLE TRACK
MOUNT

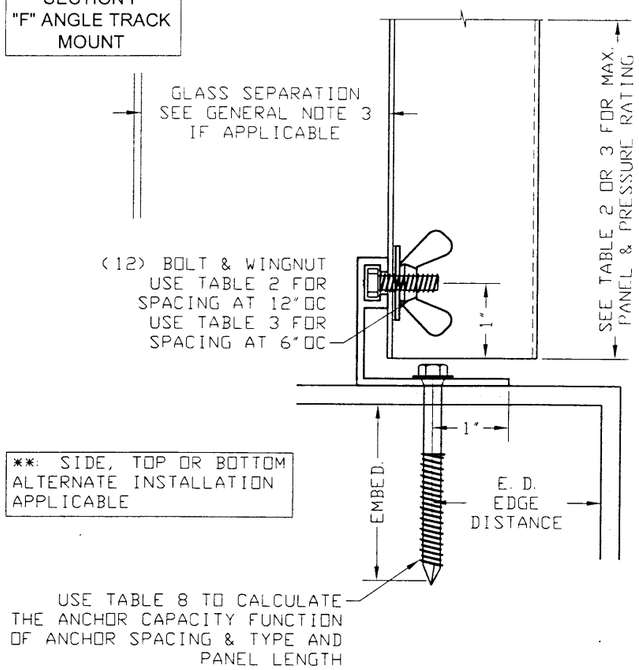

**: SIDE, TOP OR BOTTOM
ALTERNATE INSTALLATION
APPLICABLE

SECTION G
"F" ANGLE TRACK
REVERSED MOUNT

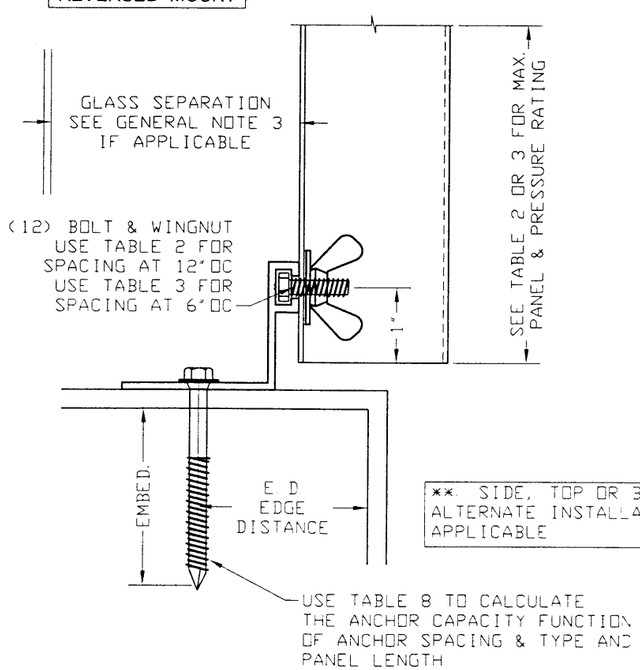

**: SIDE, TOP OR BOTTOM
ALTERNATE INSTALLATION
APPLICABLE

EXAMPLE:
PANEL HEIGHT: L=144"
MAXIMUM PRESSURE: Pd= ±64 PSF
MOUNT TYPE: D or E
ANCHOR TYPE C1 - SEE TABLE 4
ANCHOR SPACING: 6" OC
EDGE DISTANCE - 2-1/2"
EMBEDMENT: 1-3/4"

TABLE 8 - MOUNT TYPE F or G - MAXIMUM ANCHOR CAPACITY (PSF) X ANCHOR SPACING X PANEL LENGTH

	L	12"OC								8"OC								6"OC							
	in	C1	C2	C3	C4	C5	C6	C7	C9	C1	C2	C3	C4	C5	C6	C7	C9	C1	C2	C3	C4	C5	C6	C7	C9
3000 PSI CONCRETE	144	32	31	33	35	39	38	32	30	48	47	50	53	59	58	48	45	64	62	67	70	75	75	64	60
	127	36	35	38	40	45	43	36	34	55	53	57	60	67	65	54	51	73	70	76	80	80	80	72	68
	111	42	40	44	46	51	50	41	39	63	61	66	69	77	75	62	59	84	81	85	85	85	85	83	78
	94	49	47	51	54	60	59	49	46	74	71	77	81	90	88	73	69	90	90	90	90	90	90	90	90
	61	76	73	79	83	93	91	75	71	100	100	100	100	100	100	100	100	100	100	100	100	100	100	100	100
	48	97	94	101	104	104	104	96	91	104	104	104	104	104	104	104	104	104	104	104	104	104	104	104	104

	L	12"OC								8"OC								6"OC							
	in	HB1	HB2	HB3	HB4	HB5	HB6	HB7	HB9	HB1	HB2	HB3	HB4	HB5	HB6	HB7	HB9	HB1	HB2	HB3	HB4	HB5	HB6	HB7	HB9
HOLLOW BLOCK	144	15	15	13	16	22	27	25	14	23	23	20	25	33	41	38	21	47	46	41	50	66	75	75	42
	127	17	17	15	18	25	31	28	15	26	26	23	28	37	47	43	23	53	52	46	56	75	80	80	47
	111	20	20	17	21	28	36	33	18	30	30	26	32	43	54	49	27	61	60	53	65	85	85	85	54
	94	24	23	20	25	33	42	39	21	36	35	31	38	50	63	58	32	72	70	62	76	90	90	90	64
	61	37	36	32	39	52	65	60	33	55	54	48	58	78	98	90	49	100	100	96	100	100	100	100	99
	48	47	46	41	50	66	83	76	42	71	69	61	75	99	104	104	63	104	104	104	104	104	104	104	104

	L	12"OC					8"OC					6"OC					4"OC				
	in	W1	W2	W5	M1	M2	W1	W2	W5	M1	M2	W1	W2	W5	M1	M2	W1	W2	W5	M1	M2
WOOD G>=0.55 METAL STRUC.	144	21	25	16	24	20	32	38	24	37	31	43	51	32	49	41	64	75	48	74	62
	127	24	29	18	28	23	36	43	27	42	35	48	58	36	56	47	73	80	55	80	71
	111	27	33	21	32	27	41	50	31	48	40	55	66	42	64	54	83	85	63	85	81
	94	32	39	24	37	31	49	59	37	56	47	65	78	49	75	63	90	90	74	90	90
	61	50	60	38	58	49	76	90	57	87	73	100	100	76	100	98	100	100	100	100	100
	48	64	77	48	74	62	97	104	73	104	94	104	104	97	104	104	104	104	104	104	104

L - PANEL LENGTH IN INCHES
USE TABLE 4 TO SELECT ANCHOR TYPE

EXAMPLE:
PANEL HEIGHT: L=48"
MAXIMUM PRESSURE: Pd= ±64 PSF
MOUNT TYPE: F or G
ANCHOR TYPE W1 - SEE TABLE 4
ANCHOR SPACING: 12" OC
EDGE DISTANCE - 3/4"
EMBEDMENT: 1-1/2"

MANUFACTURER:
LOOKOUT
Shutters, Inc.
1268 MAULDIN ROAD
CALHOUN, GA 30701
Tel.: (877) 200-0234
Fax: (706) 602-6922

PRODUCT:
LOOKOUT
CLEAR STORM PANEL
LEXAN CORRUGATED SHEET

Engineering:
EngCo Inc.
CR 11234
6971 W. Sunrise Blvd. 104
Plantation, Fl. 33313
ENGCO@AOL.COM

Engineer Seal
Pedro De Figueiredo
TEXAS - PE 102937

DRAFTING:
PK DRAFTING & MORE

Date: 7/19/09
Scale: NA
Design by: PPMF

Drawing Number
09-174

SHEET
8 of 12

TYPICAL SECTIONS AND ANCHORAGE SPACING

SECTION H
DIRECT MOUNT

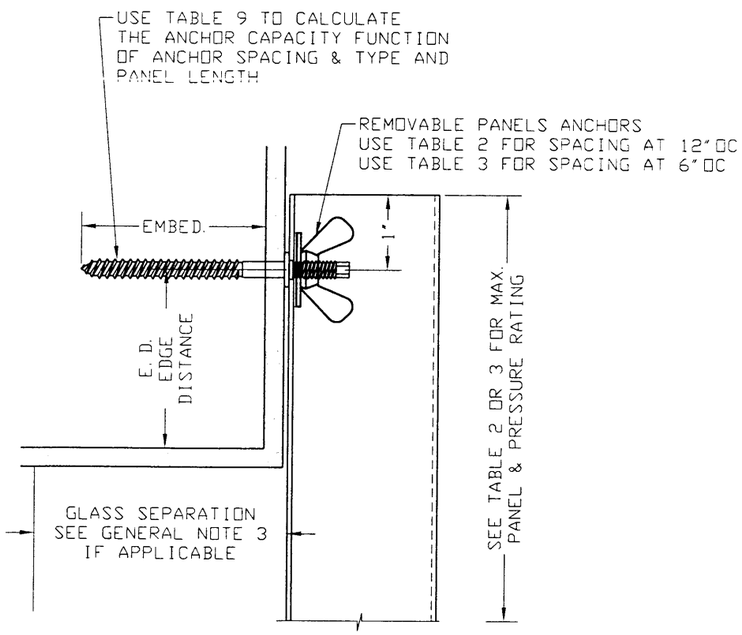

**: SIDE, TOP OR BOTTOM
ALTERNATE INSTALLATION APPLICABLE

TABLE 9 - MOUNT TYPE H
MAXIMUM ANCHOR CAPACITY (PSF) X ANCHOR SPACING X PANEL LENGTH

	L	12"OC					6"OC				
	in	C6	C7	C8	C9	C10	C6	C7	C8	C9	C10
3000 PSI CONCRETE	144	75	75	73	75	75	75	75	75	75	75
	127	80	80	80	80	80	80	80	80	80	80
	111	85	85	85	85	85	85	85	85	85	85
	94	90	90	90	90	90	90	90	90	90	90
	61	100	100	100	100	100	100	100	100	100	100
	48	104	104	104	104	104	104	104	104	104	104

	L	12"OC					6"OC				
	in	HB6	HB7	HB8	HB9	HB10	HB6	HB7	HB8	HB9	HB10
HOLLOW BLOCK	144	65	53	35	29	75	75	75	70	58	75
	127	74	60	39	32	80	80	80	79	65	80
	111	85	69	45	37	85	85	85	85	75	85
	94	90	81	53	44	90	90	90	90	89	90
	61	100	100	82	68	100	100	100	100	100	100
	48	104	104	104	87	104	104	104	104	104	104

	L	12"OC			6"OC		
	in	W3	W4	W5	W3	W4	W5
WOOD G>=0.55	144	75	46	38	75	75	75
	127	80	52	43	80	80	80
	111	85	60	49	85	85	85
	94	90	70	58	90	90	90
	61	100	100	90	100	100	100
	48	104	104	104	104	104	104

L - PANEL LENGTH IN INCHES
USE TABLE 4 TO SELECT ANCHOR TYPE

MANUFACTURER:
LOOKOUT
Shutters, Inc.
1268 MAULDIN ROAD
CALHOUN, GA 30701
Tel.: (877) 200-0234
Fax: (706) 602-6922

PRODUCT:
LOOKOUT
CLEAR STORM PANEL
LEXAN CORRUGATED SHEET

Engineering:
EngCo Inc.
CR 11234
6971 W. Sunrise Blvd. 104
Plantation, Fl. 33313
ENGCO@AOL.COM

Engineer Seal
Pedro De Figueiredo
TEXAS - PE 102937

DRAFTING:
PK DRAFTING & MORE

Date: 7/19/09
Scale: NA
Design by: PPMF

Drawing Number
09-174

SHEET
9 of 12

TYPICAL SECTIONS AND ANCHORAGE SPACING

SECTION I
"F" TRACK MOUNT

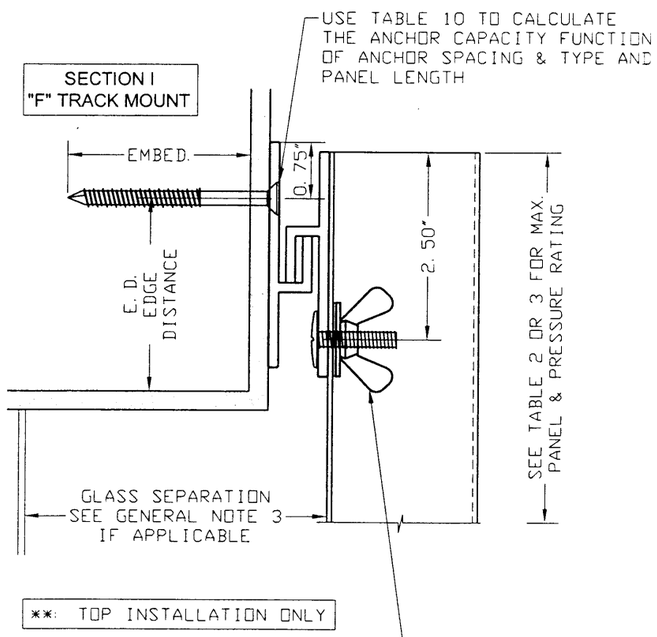

**: TOP INSTALLATION ONLY

EXAMPLE:
PANEL HEIGHT: L=144"
MAXIMUM PRESSURE: Pd= ±75 PSF
MOUNT TYPE: I
ANCHOR TYPE C6 - SEE TABLE 4
ANCHOR SPACING: 6" OC
EDGE DISTANCE - 4"
EMBEDMENT: 1.625"

TABLE 10 - MOUNT TYPE I
- MAXIMUM ANCHOR CAPACITY (PSF) X ANCHOR SPACING X PANEL LENGTH

	L	12" OC								8" OC								6" OC							
	in	C1	C2	C3	C4	C5	C6	C7	C9	C1	C2	C3	C4	C5	C6	C7	C9	C1	C2	C3	C4	C5	C6	C7	C9
3000 PSI CONCRETE	144	38	43	41	41	44	43	37	42	57	64	61	62	67	65	56	63	75	75	75	75	75	75	75	75
	127	43	48	46	46	50	49	42	47	64	73	69	70	76	73	63	71	80	80	80	80	80	80	80	80
	111	49	56	53	53	58	56	48	54	74	84	80	80	85	84	73	82	85	85	85	85	85	85	85	85
	94	58	66	62	63	68	66	57	64	87	90	90	90	90	90	85	90	90	90	90	90	90	90	90	90
	61	89	100	96	97	100	100	88	99	100	100	100	100	100	100	100	100	100	100	100	100	100	100	100	100
	48	104	104	104	104	104	104	104	104	104	104	104	104	104	104	104	104	104	104	104	104	104	104	104	104

	L	8" OC								6" OC								4" OC							
	in	HB1	HB2	HB3	HB4	HB5	HB6	HB7	HB9	HB1	HB2	HB3	HB4	HB5	HB6	HB7	HB9	HB1	HB2	HB3	HB4	HB5	HB6	HB7	HB9
HOLLOW BLOCK	144	21	23	19	26	36	47	38	21	28	31	25	35	48	63	51	28	42	46	38	53	73	75	75	42
	127	23	26	21	30	41	53	43	23	31	35	28	40	55	71	58	31	47	52	43	60	80	80	80	47
	111	27	30	24	34	47	61	50	27	36	40	33	45	63	82	67	36	54	60	49	68	85	85	85	54
	94	32	35	29	40	55	72	59	32	42	47	39	54	74	90	78	42	64	71	58	81	90	90	90	64
	61	49	55	45	62	86	100	91	49	65	73	60	83	100	100	100	65	98	100	90	100	100	100	100	98
	48	63	70	57	79	104	104	104	63	84	93	76	104	104	104	104	84	104	104	104	104	104	104	104	104

	L	12" OC						8" OC						6" OC						4" OC					
	in	W1	W2	W4	W5	M1	M2	W1	W2	W4	W5	M1	M2	W1	W2	W4	W5	M1	M2	W1	W2	W4	W5	M1	M2
WOOD G>=0.55 METAL STRUC.	144	49	39	22	18	20	16	74	59	33	27	31	25	75	75	44	37	41	33	75	75	67	55	62	50
	127	56	45	25	20	23	19	80	67	37	31	35	28	80	80	50	41	47	38	80	80	75	62	70	57
	111	64	51	29	24	27	22	85	77	43	36	40	33	85	85	58	48	54	44	85	85	85	72	81	66
	94	75	61	34	28	31	25	90	90	51	42	47	38	90	90	68	56	63	51	90	90	90	84	90	77
	61	100	94	52	43	48	39	100	100	78	65	73	59	100	100	100	87	97	79	100	100	100	100	100	100
	48	104	104	67	55	62	50	104	104	100	83	93	76	104	104	104	104	104	101	104	104	104	104	104	104

L - PANEL LENGTH IN INCHES
USE TABLE 4 TO SELECT ANCHOR TYPE

EXAMPLE:
PANEL HEIGHT: L=48"
MAXIMUM PRESSURE: Pd= ±93 PSF
MOUNT TYPE: I
ANCHOR TYPE M1 - SEE TABLE 4
ANCHOR SPACING: 8" OC
EDGE DISTANCE - 1/2"
EMBEDMENT: INTO 1/8" ALUM.

MANUFACTURER:
LOOKOUT
Shutters, Inc.
1268 MAULDIN ROAD
CALHOUN, GA 30701
Tel.: (877) 200-0234
Fax: (706) 602-6922

PRODUCT:
LOOKOUT
CLEAR STORM PANEL
LEXAN CORRUGATED SHEET

Engineering:
EngCo Inc.
CR 11234
6971 W. Sunrise Blvd. 104
Plantation, Fl. 33313
ENGCO@AOL.COM

STATE OF TEXAS
PEDRO FIGUEIREDO
102937
LICENSED PROFESSIONAL ENGINEER

JUL 2 8 2009

Engineer Seal
Pedro De Figueiredo
TEXAS - PE 102937

DRAFTING:
PK DRAFTING & MORE

Date: 7/19/09
Scale: NA
Design by: PPMF

Drawing Number
09-174

TYPICAL SIDE CLOSURES

SECTION J
BUILT-OUT SIDE CLOSURE

THIS OPTION IT WILL REQUIRE GLASS SEPARATION AS PER GENERAL NOTE #3 FOR GAPS GREATER THAN 1/4"

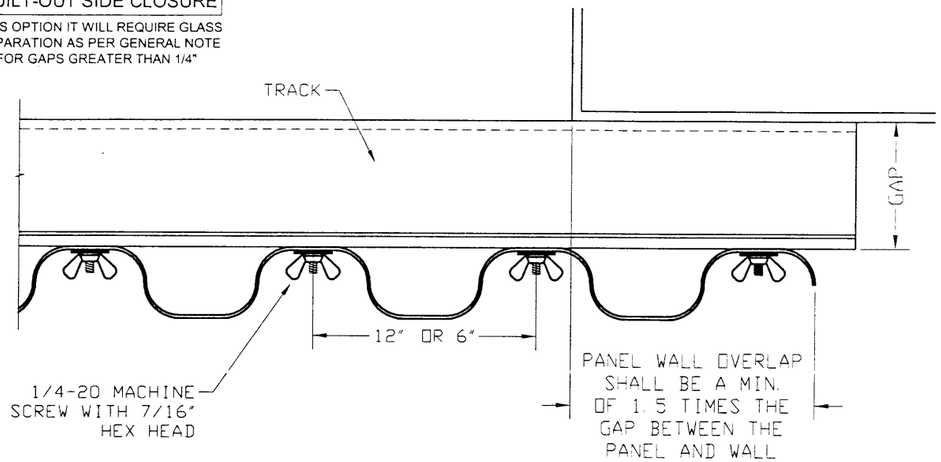

SECTION J
ALTERNATE
BUILT-OUT SIDE CLOSURE

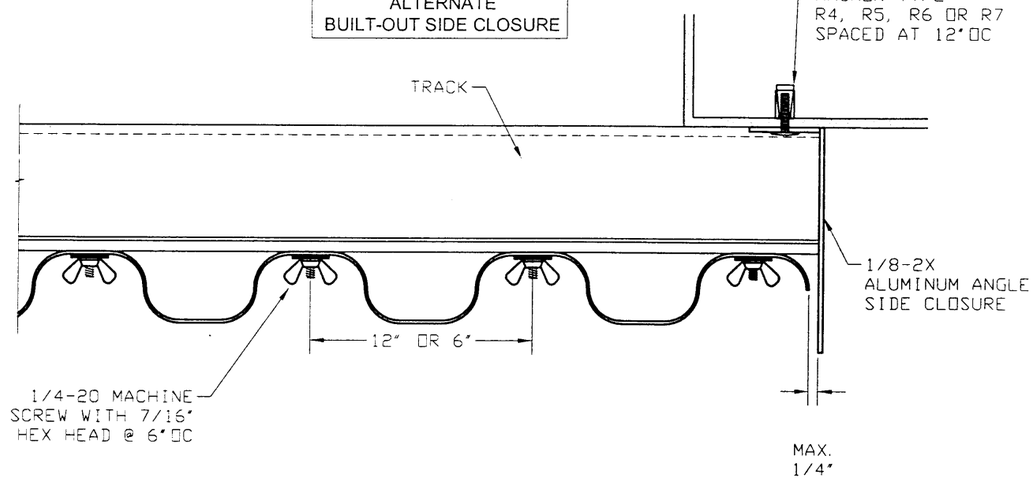

SECTION K
INSET SIDE CLOSURE

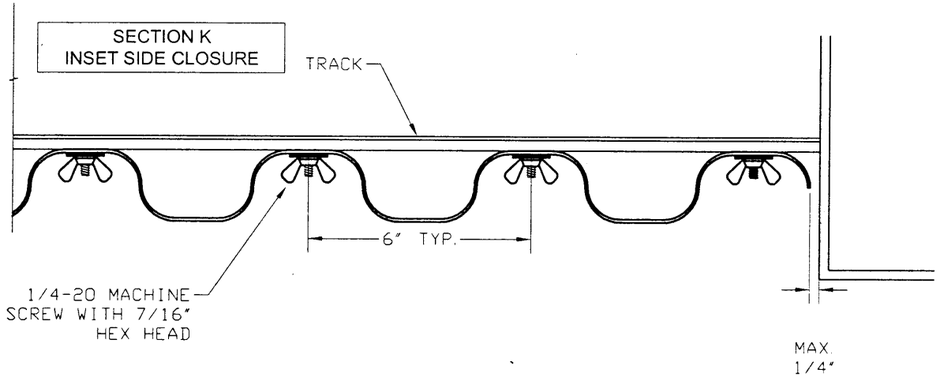

SECTION K
ALTERNATE
INSET SIDE CLOSURE

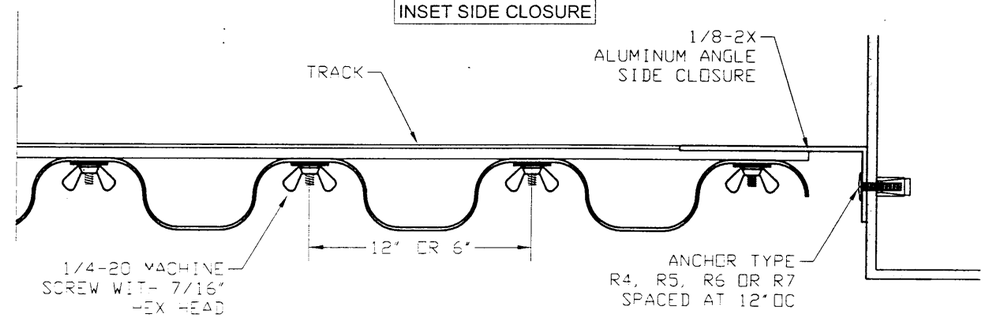

SECTION L
CORNER CLOSURE

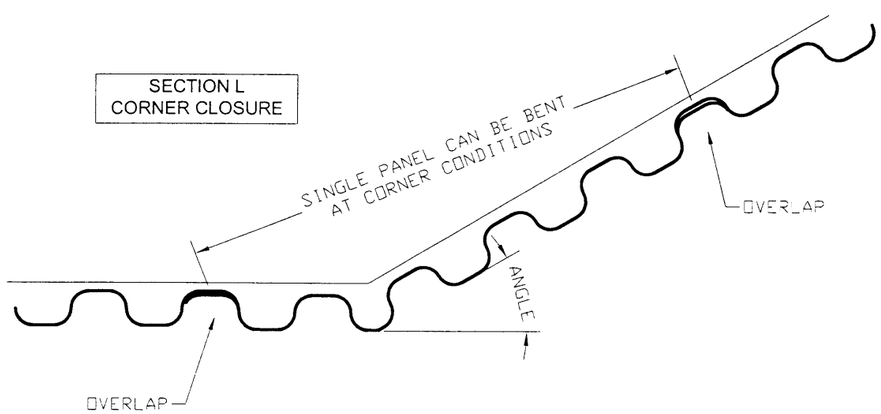

MANUFACTURER:
LOOKOUT
Shutters, Inc.
1268 MAULDIN ROAD
CALHOUN, GA 30701
Tel.: (877) 200-0234
Fax: (706) 602-6922

PRODUCT:
LOOKOUT
CLEAR STORM PANEL
LEXAN CORRUGATED SHEET

Engineering:
EngCo Inc.
CR 11234
6971 W. Sunrise Blvd. 104
Plantation, Fl. 33313
ENGCO@AOL.COM

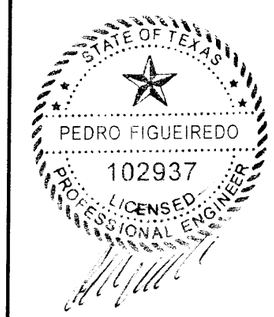

Engineer Seal
Pedro De Figueiredo
TEXAS - PE 102937

DRAFTING:
PK DRAFTING & MORE

Date: 7/19/09
Scale: NA
Design by: PPMF

Drawing Number
09-174

SHEET
11 of 12

INSTALLATION WITH 1/8-1X4 ALUMINUM TUBE OVER WALL STUDS AND UNDER ROOF TRUSS

INSTALLATION WITH 1/8-1X4 ALUMINUM TUBE
UNDER ROOF TRUSS SPACED AT MAX. 24"OC
APPLICABLE ONLY FOR VALUES ON TABLE 1 AND 2

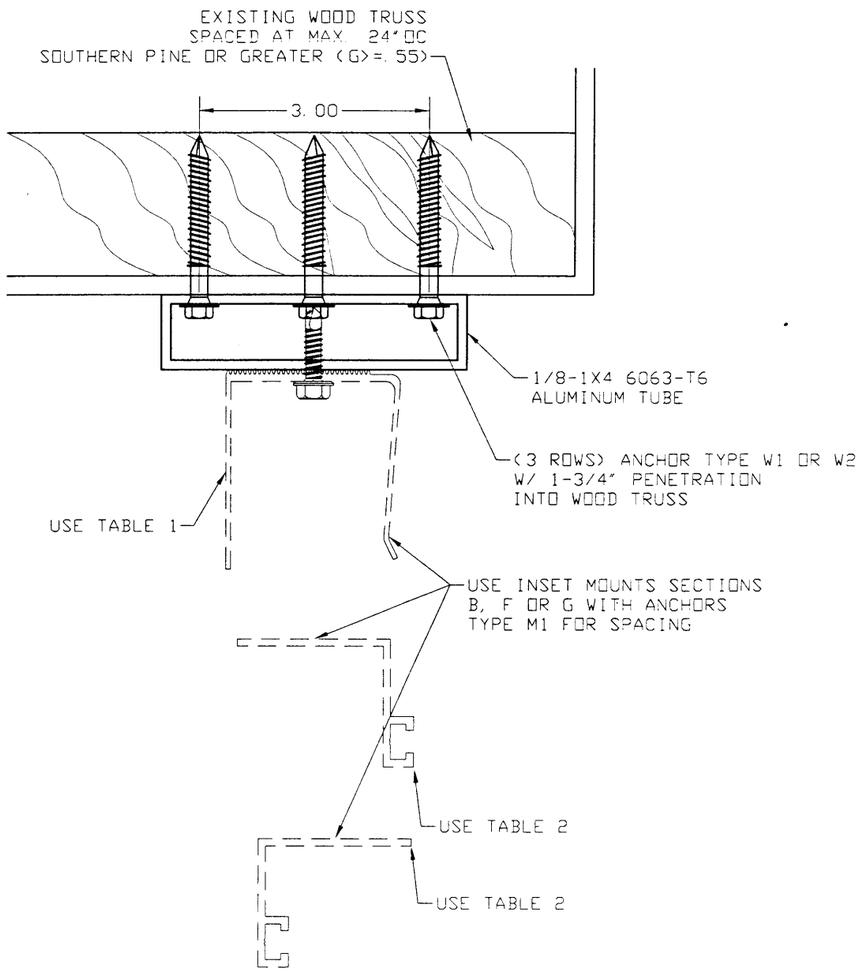

INSTALLATION WITH 1/8-1X4 ALUMINUM TUBE
OVER WALL STUDS SPACED AT MAX. 16"OC
APPLICABLE FOR VALUES ON TABLE 1, 2 AND 3

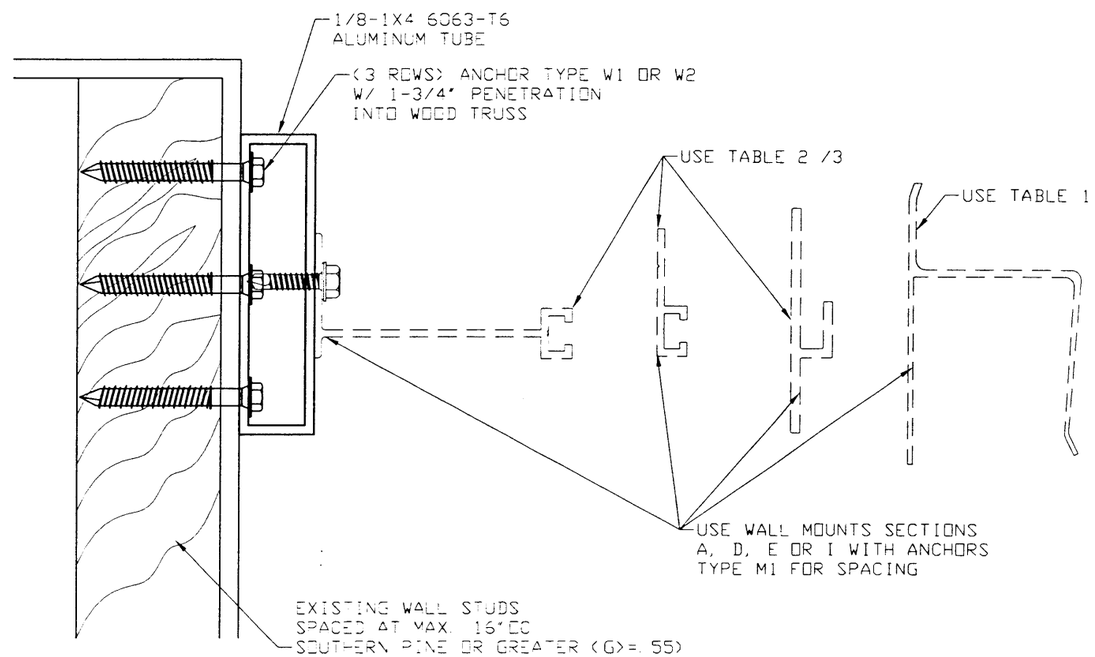

MANUFACTURER:
LOOKOUT
Shutters, Inc.
1268 MAULDIN ROAD
CALHOUN, GA 30701
Tel.: (877) 200-0234
Fax: (706) 602-6922

PRODUCT:
LOOKOUT
CLEAR STORM PANEL
LEXAN CORRUGATED SHEET

Engineering:
EngCo Inc.
CR 11234
6971 W. Sunrise Blvd. 104
Plantation, Fl. 33313
ENGCO@AOL.COM

STATE OF TEXAS
PEDRO FIGUEIREDO
102937
LICENSED
PROFESSIONAL ENGINEER

Engineer Seal
Pedro De Figueiredo
TEXAS - PE 102937

DRAFTING:
PK DRAFTING & MORE

Date: 7/19/09
Scale: NA
Design by: PPMF

Drawing Number
09-174

SHEET
12 of 12