GENERAL NOTES:

1. 0.050" BERTHA ALUMINUM STORM PANEL SHOWN ON THIS PRODUCT EVALUATION DOCUMENT (P. E. D.) HAS BEEN VERIFIED FOR COMPLIANCE IN ACCORDANCE WITH THE 2003 EDITIONS OF THE INTERNATIONAL BUILDING CODE, (I.B.C.) AND INTERNATIONAL RESIDENTIAL CODE, (I.R.C.) WITH THE 2003 TEXAS REVISIONS, EFFECTIVE JANUARY 1, 2005.
0.050" BERTHA ALUMINUM STORM PANEL SHALL BE INSTALLED AT SEAWARD AND INLAND AREAS, AS DEFINED BY THE TEXAS DEPARTMENT OF INSURANCE.
DESIGN WIND LOADS SHALL BE DETERMINED AS PER SECTION 1609 OF THE INTERNATIONAL BUILDING CODE, FOR A BASIC WIND SPEED AS REQUIRED BY THE JURISDICTION WHERE SHUTTER WILL BE INSTALLED, AND FOR A DIRECTIONALITY FACTOR Kd=0.85, IN ACCORDANCE W/ ASCE 7–02 STANDARD.
0.050" BERTHA ALUMINUM STORM PANEL ADEQUACY FOR IMPACT AND CYCLIC RESISTANCE HAS BEEN VERIFIED IN ACCORDANCE WITH SECTIONS 1609.1.4 AND R301.2.1.2 OF THE ABOVE MENTIONED CODES, RESPECTIVELY, AS PER AMERICAN TEST LAB REPORT # 0321.01–05, # 0812.01–05 AND # 0119.01–06, PER ASTM E–1886, E–1996 AND E–330 STANDARDS.

2. ALL ALUMINUM SHEET METAL PANELS SHALL HAVE 5052–H32 ALLOY OR 3004–H34 ALLOY.

3. ALL ALUMINUM EXTRUSIONS SHALL BE ALUMINUM ASSOCIATION 6063–T6 ALLOY AND TEMPER, WITH Fy = 25.0 ksi MINIMUM (UNLESS OTHERWISE NOTED). THE THICKNESS OF ALL EXTRUSIONS SHALL BE AS SHOWN ON THIS DRAWING WITH STANDARD TOLERANCES IN ACCORDANCE WITH THE "ALUMINUM STANDARDS AND DATA 2003 EDITION", ALUMINUM ASSOCIATION INCORPORATED, WASHINGTON D.C.

4. ALL SCREWS & BOLTS INSTALLED AT SEAWARD AREAS TO BE STAINLESS STEEL 304 OR 316 AISI SERIES AND MEET ASTM A167, OR HOT DIPPED GALVANIZED (AFTER FABRICATION) CARBON STEEL AS PER ASTM A123 OR ASTM A153, OR HOT DIPPED GALVANIZED OR GALVANNEALED (PRIOR TO FABRICATION) AND MEET ASTM A653 WITH 50 ksi YIELD STRENGTH AND 90 ksi TENSILE STRENGTH, PER 2003 TEXAS REVISIONS TO SECTION 1716.1.1 OF THE 2003 I.B.C. AND SECTION R324.1.1 OF THE 2003 I.R.C.

5. ALL SCREWS & BOLTS INSTALLED AT INLAND I AREAS TO BE STAINLESS STEEL 304 OR 316 AISI SERIES AND MEET ASTM A167, OR HOT DIPPED GALVANIZED (AFTER FABRICATION) CARBON STEEL AS PER ASTM A123 OR ASTM A153, OR HOT DIPPED GALVANIZED OR GALVANNEALED (PRIOR TO FABRICATION) AND MEET ASTM A653; HOT DIP GALVANIZED OR ELECTRO GALVANIZED PER ASTM A641, MECHANICALLY DEPOSITED ZINC COATINGS PER ASTM B695 OR ELECTRO DEPOSITED ZINC COATINGS PER ASTM B633, PER THE 2003 TEXAS REVISIONS TO SECTION 1716.1.2 OF THE 2003 I.B.C. AND TO SECTION R324.1.2 OF THE 2003 I.R.C.

6. ANCHORS TO WALL SHALL BE AS FOLLOWS: (UNLESS OTHERWISE NOTED)

(A) TO EXISTING POURED CONCRETE:

–1/4"ø TAPCON ANCHORS AS MANUFACTURED BY I.T.W./BUILDEX AND ELCO TEXTRON.
–1/4"ø S.G. TAPCONS AS MANUFACTURED BY ITW/ BUILDEX.
–1/4"ø PANEL MATES ANCHORS MALE OR TVAS AS MANUFACTURED BY ELCO TEXTRON.
–1/4"ø x 3/4" SOLID SET ANCHORS, AS DISTRIBUTED BY ALL POINTS SCREW, BOLT & SPECIALTY COMPANY.

NOTES:
A.1) MINIMUM EMBEDMENT INTO POURED CONCRETE OF TAPCON ANCHORS AND S.G. TAPCONS IS 1 3/4";
FOR ELCO PANELMATE AND ELCO TVAS IS 2".

A.2) 3/4"ø SOLID SET ANCHORS SHALL BE ENTIRELY EMBEDDED INTO THE POURED CONCRETE. NO EMBEDMENT INTO STUCCO SHALL BE PERMITTED.
–1/4"ø–20 SCREWS USED SHALL BE 1 1/2" LONG MINIMUM SHOULD STUCCO EXIST, AND 1" MINIMUM FOR WALLS WITH NO STUCCO.

A.3) IN CASE THAT PRECAST STONE, PRECAST CONCRETE PANELS, OR PAVERS BE FOUND ON THE EXISTING WALL OR FLOOR, ANCHORS SHALL BE LONG ENOUGH TO REACH THE MAIN STRUCTURE BEHIND SUCH PANELS, ANCHORAGE SHALL BE AS INDICATED ON NOTES A.1) & A.2) ABOVE.

(B) TO EXISTING CONCRETE BLOCK WALL:

–1/4"ø TAPCON ANCHORS AS MANUFACTURED BY I.T.W./BUILDEX AND ELCO TEXTRON.
–1/4"ø S.G. TAPCONS AS MANUFACTURED BY ITW/ BUILDEX.
–1/4"ø PANEL MATES ANCHORS MALE OR TVAS AS MANUFACTURED BY ELCO TEXTRON.
–1/4"ø x 3/4" SOLID SET ANCHORS, AS DISTRIBUTED BY ALL POINTS SCREW, BOLT & SPECIALTY COMPANY.

NOTES:
B.1) MINIMUM EMBEDMENT OF TAPCON ANCHORS, S.G. TAPCONS, ELCO PANELMATE, ELCO TVAS.
INTO THE CONCRETE BLOCK UNIT SHALL BE 1 1/4".

B.2) –3/4"ø SOLID SET ANCHORS SHALL BE ENTERILY EMBEDDED INTO THE CONCRETE BLOCK UNIT
NO EMBEDMENT INTO STUCCO SHALL BE PERMITTED.
–1/4"ø–20 SCREWS USED SHALL BE 1 1/2" LONG MINIMUM SHOULD STUCCO EXIST, AND 1" MINIMUM FOR WALLS WITH NO STUCCO.

B.3) IN CASE THAT PRECAST STONE OR PRECAST CONCRETE PANELS BE FOUND ON THE EXISTING WALL, ANCHORS SHALL BE LONG ENOUGH TO REACH THE MAIN STRUCTURE BEHIND SUCH PANELS. ANCHORAGE SHALL BE AS INDICATED ON NOTES IN B.1) & B.2) ABOVE.

(C) TO EXISTING WOOD FRAME BUILDINGS, SEE SPECIFICATIONS ON SHEETS 12, 13, 14 & 15. ANCHORAGE SHALL BE PERFORMED BEYOND ANY FINISH MATERIAL AT WALL LIKE BRICK VENEER, STUCCO OR ANY OTHER FINISH.

(D) ANCHORS SHALL BE INSTALLED FOLLOWING ALL OF THE RECOMMENDATIONS AND SPECIFICATIONS OF THE ANCHOR'S MANUFACTURER.

7. PANELS MAY ALSO BE INSTALLED HORIZONTALLY FOLLOWING INSTALLATION DETAILS SHOWN ON SECTIONS 1 THRU 13 (SHEET 4 THRU 8) EXCEPT THAT HEADERS 2, 3, 3A & 4 SHALL NOT BE USED.

8. IT SHALL BE THE RESPONSIBILITY OF THE CONTRACTOR TO VERIFY THE SOUNDNESS OF THE STRUCTURE WHERE SHUTTER IS TO BE ATTACHED TO INSURE PROPER ANCHORAGE. CONTRACTOR TO SEAL/CAULK ALL SHUTTER COMPONENT EDGES WHICH REMAIN IN CONTINUOUS CONTACT WITH THE BUILDING DUE TO THEIR FASTENING TO IT, TO PREVENT WIND/RAIN INTRUSION. CAULK AND SEAL SHUTTER TRACKS ALL AROUND FULL LENGTH.

9. 0.050" BERTHA ALUMINUM STORM PANEL SHALL COMPLY WITH SPECIFICATIONS INDICATED IN THIS DRAWING PLUS ANY BUILDING AND ZONING REGULATIONS PROVIDED BY THE JURISDICTION WHERE PERMIT IS APPLIED TO.

10. (a) THIS PRODUCT EVALUATION DOCUMENT (P. E. D.) PREPARED BY THIS ENGINEER IS GENERIC AND DOES NOT PROVIDE INFORMATION FOR A SITE SPECIFIC PROJECT; i. e. WHERE THE SITE CONDITIONS DEVIATE FROM THE P. E. D.

(b) CONTRACTOR TO BE RESPONSIBLE FOR THE SELECTION, PURCHASE AND INSTALLATION INCLUDING LIFE SAFETY OF THIS PRODUCT, BASED ON THIS PRODUCT EVALUATION DOCUMENT, PROVIDED HE/SHE DOES NOT DEVIATE FROM THE CONDITIONS DETAILED ON THIS DOCUMENT. CONSTRUCTION SAFETY AT SITE IS THE CONTRACTOR'S RESPONSIBILITY.

(c) THIS PRODUCT EVALUATION DOCUMENT WILL BE CONSIDERED INVALID IF ALTERED BY ANY MEANS.

(d) SITE SPECIFIC PROJECTS SHALL BE PREPARED BY A REGISTERED ENGINEER OR ARCHITECT WHICH WILL BECOME THE ENGINEER OF RECORD (E.O.R.) FOR THE PROJECT AND WHO WILL BE RESPONSIBLE FOR THE PROPER USE OF THE P.E.D. ENGINEER OF RECORD, ACTING AS A DELEGATED ENGINEER TO THE P.E.D. ENGINEER, SHALL SUBMIT TO THIS LATTER THE SITE SPECIFIC DRAWINGS FOR REVIEW.

(e) THIS P.E.D. SHALL BEAR THE DATE AND ORIGINAL SEAL AND SIGNATURE OF THE PROFESSIONAL ENGINEER OF RECORD THAT PREPARED IT.

T.D.I. 2003

TILTECO INC.
TILLIT TESTING & ENGINEERING COMPANY
6355 N.W. 36th. St., Ste. 305, VIRGINIA GARDENS, Fl. 33166
Phone : (305)871–1530 . Fax : (305)871–1531
EB–0006719
WALTER A. TILLIT Jr., P. E.
FLORIDA Lic. 44167

0.050" BERTHA ALUMINUM STORM PANEL (2.00" DEEP)

EASTERN METAL SUPPLY, INC
9400 TELGE ROAD
HOUSTON,TX. 77095

REV. NO	DESCRIPTION	DATE	REV. No	DESCRIPTION	DATE
1	OLD DWG 05–175	6/26/06	3		
2			4		

L.G.
DRAWN BY:

6/26/06
DATE

06–171
DRAWING No

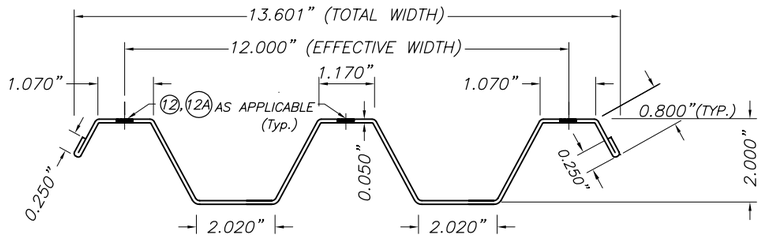

FULL PANEL W/ HEMMED EDGES

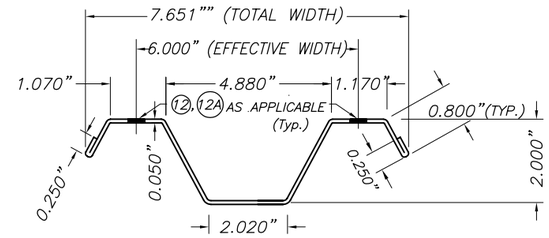

HALF PANEL W/ HEMMED EDGES

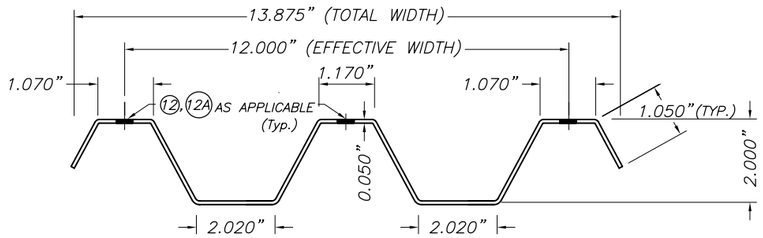

OPTIONAL FULL PANEL W/O HEMMED EDGES

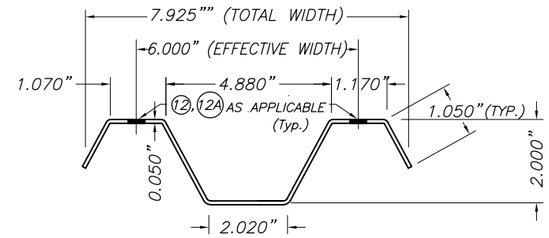

OPTIONAL HALF PANEL W/O HEMMED EDGES

1 STORM PANEL

SCALE : 1/4" = 1"

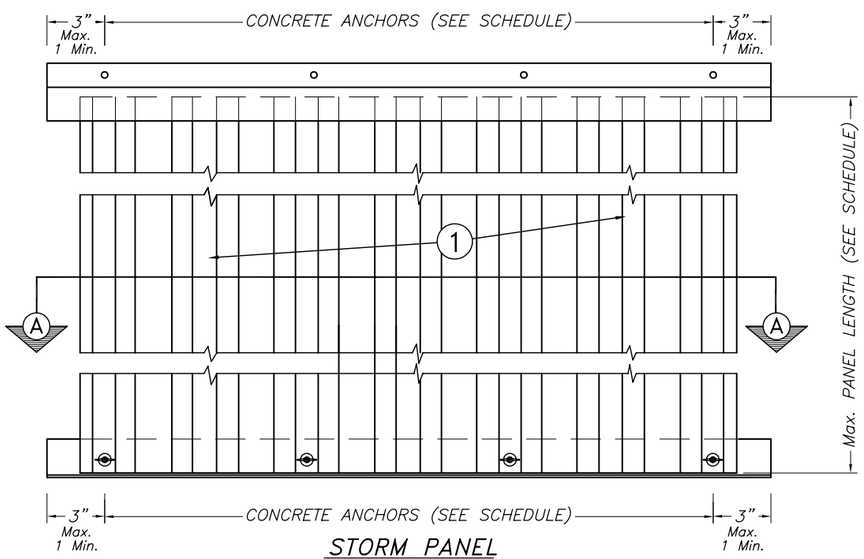

STORM PANEL
TYPICAL ELEVATION

N. T. S.

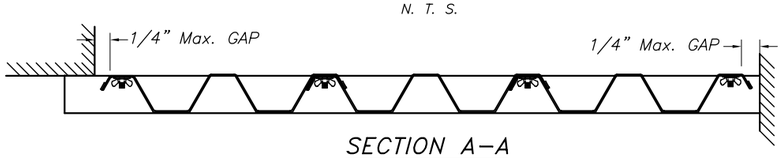

SECTION A–A

N. T. S.

MAXIMUM DESIGN PRESSURE RATING "W" (p.s.f.) AND CORRESPONDING MAXIMUM PANEL LENGTH "L" SCHEDULE

PANELS RETAINED AT BOTH ENDS WITH TRACKS ⑤⑥⑦⑧⑨⑩⑪⑭ OR DIRECT MOUNTED ✱

MAXIMUM DESIGN PRESSURE RATING W (p.s.f.)	Max. PANEL LENGTH L (ft.)
+30.0, −30.0	13'–0"
+35.0, −35.0	12'–8"
+40.0, −40.0	12'–4"
+45.0, −45.0	12'–0"
+50.0, −50.0	11'–0"
+55.0, −55.0	10'–0"
+60.0, −60.0	9'–4"
+70.0, −70.0	8'–0"
+80.0, −80.0	7'–0"
+90.0, −90.0	6'–3"
+90.0, −100.0	5'–7"
+90.0, −110.0	5'–1"
+90.0, −120.0	4'–8"
+90.0, −130.0	4'–0"

PANELS RETAINED AT LEAST IN ONE OF THEIR ENDS WITH TRACKS ②③③A OR ④✱

MAXIMUM DESIGN PRESSURE RATING W (p.s.f.)	Max. PANEL LENGTH L (ft.)
+30.0, −30.0	13'–0"
+35.0, −35.0	12'–0"
+40.0, −40.0	11'–3"
+45.0, −45.0	10'–0"
+50.0, −50.0	9'–0"
+55.0, −55.0	8'–2"
+60.0, −60.0	7'–6"
+70.0, −70.0	6'–5"
+80.0, −80.0	5'–8"
+90.0, −90.0	5'–0"
+90.0, −100.0	5'–0"
+90.0, −110.0	5'–0"
+90.0, −120.0	4'–9"
+90.0, −130.0	4'–4 1/2"

✱ NOTE:

MAX. DESIGN LOAD & MAXIMUM PANEL LENGTH FOR INTERNALLY REMOVABLE PANELS AS PER MOUNTING INSTALLATIONS ON SHEET 7 OF 17 IS + 50.0, − 50.0 p.s.f. W/ 88" MAX. PANEL LENGTH.

MAX. DESIGN LOAD & MAXIMUM PANEL LENGTH FOR MOUNTING AS PER ALTERNATIVE #11 AND 14 ON SHEET 14A AND 15 OF 17, RESPECTIVELY, ARE +50.0,−60.0 p.s.f. FOR 78" Max. PANEL LENGTH, AND +50.0, −50.0 p.s.f. FOR UP TO 108" PANEL LENGTH.

T.D.I. 2003

TILLECO INC.
TILLIT TESTING & ENGINEERING COMPANY
6355 N.W. 36th. St., Ste. 305, VIRGINIA GARDENS, Fl. 33166
Phone : (305)871–1530 . Fax : (305)871–1531
EB–0006719
WALTER A. TILLIT Jr., P. E.
FLORIDA Lic. 44167

0.050" BERTHA ALUMINUM STORM PANEL (2.00" DEEP)

EASTERN METAL SUPPLY, INC
9400 TELGE ROAD
HOUSTON,TX. 77095

REV. NO	DESCRIPTION	DATE	REV. No	DESCRIPTION	DATE
1	OLD DWG 05–175	6/26/06	3		
2	PANEL LIP	8/21/07	4		

L.G.
DRAWN BY:

6/26/06
DATE

06–171
DRAWING No

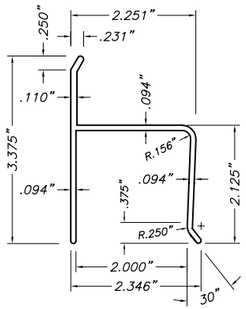

② "h" HEADER
SCALE : 3/8" = 1"

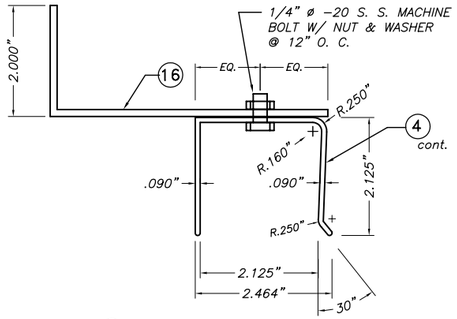

③ 3" Max. "U" BUILD OUT
SCALE : 3/8" = 1"

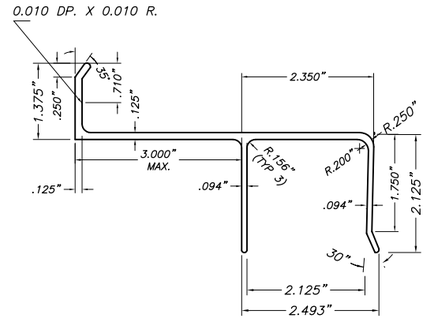

3A OPTIONAL 3" Max. "U" BUILD OUT HEADER
SCALE : 3/8" = 1"

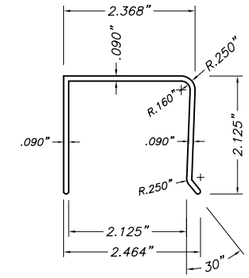

④ "U" HEADER
SCALE : 3/8" = 1"

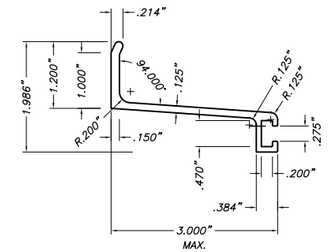

⑤ 3" MAX. ANGLE BUILD OUT BRACKET
SCALE : 3/8" = 1"

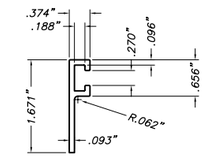

⑥ "F" TRACK
SCALE : 3/8" = 1"

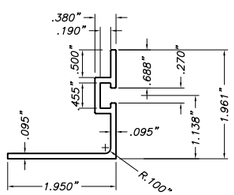

⑦ REVERSED "F" ANGLE TRACK
SCALE : 3/8" = 1"

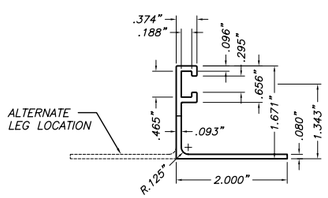

⑧ "F" TRACK ANGLE
SCALE : 3/8" = 1"

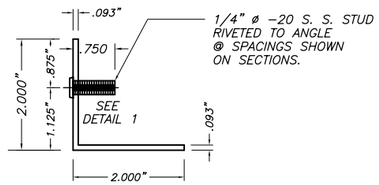

⑨ STUDDED ANGLE
6063-T5 Alum. ALLOY
SCALE : 3/8" = 1"

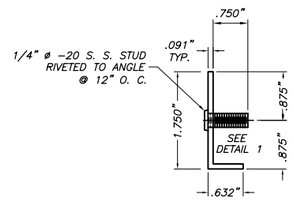

⑩ MINI WALL 1.75"x0.632" ANGLE WITH STUD
SCALE: 1/2" = 1"

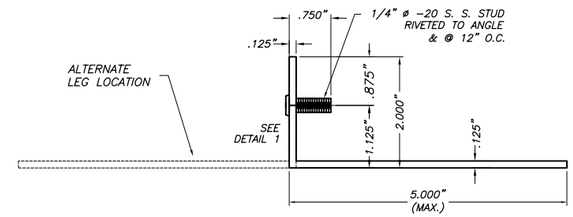

⑪ 2"x5"(MAX.)x1/8" ANGLE WITH STUD
SCALE: 3/8" = 1"

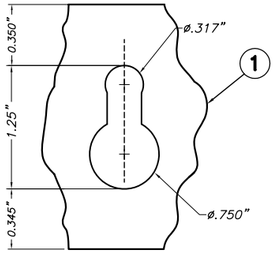

LARGE KEY HOLE (OPTION 1)
SCALE : 3/8" = 1"

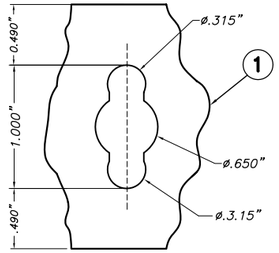

SMALL KEY HOLE (OPTION 2)
SCALE : 3/8" = 1"

⑫ KEY HOLE AT PANEL

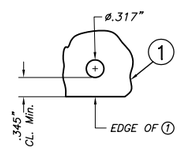

12A ROUND HOLE AT PANEL

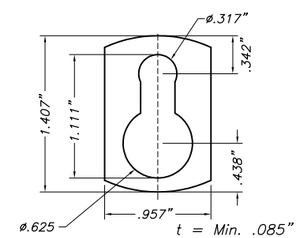

⑬ KEY HOLE WASHER
3105-H154 Alum. ALLOY
SCALE : 3/4" = 1"

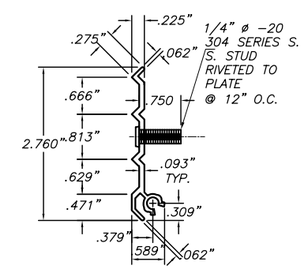

⑭ STUDDED PLATE
6063-T6 ALLOY
SCALE: 3/8" = 1"

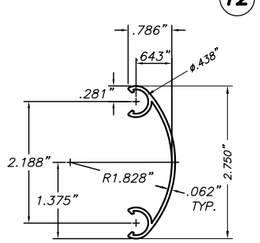

⑮ SNAP CAP
6063-T6 ALLOY
SCALE: 3/8" = 1"

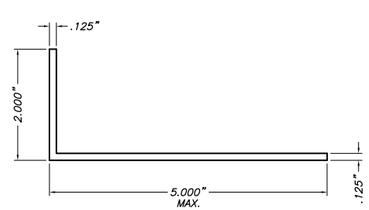

⑯ B.O. ANGLE
SCALE : 3/4" = 1"

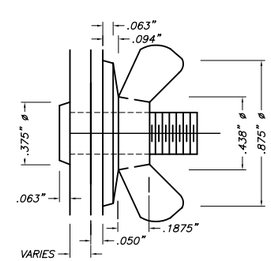

DETAIL 1: STUD W/ WING NUT

COMPONENTS

T.D.I. 2003

TILTECO INC.
TILLIT TESTING & ENGINEERING COMPANY
6355 N.W. 36th. St., Ste. 305, VIRGINIA GARDENS, Fl. 33166
Phone : (305)871-1530 . Fax : (305)871-1531
EB-0006719
WALTER A. TILLIT Jr., P. E.
FLORIDA Lic. 44167

0.050" BERTHA ALUMINUM STORM PANEL (2.00" DEEP)

EASTERN METAL SUPPLY, INC
9400 TELGE ROAD
HOUSTON,TX. 77095

REV. NO	DESCRIPTION	DATE	REV. No	DESCRIPTION	DATE
1	OLD DWG 05-175	6/26/06	3		
2			4		

L.G.
DRAWN BY:

6/26/06
DATE

06-171
DRAWING No

SHEET 3 OF 17

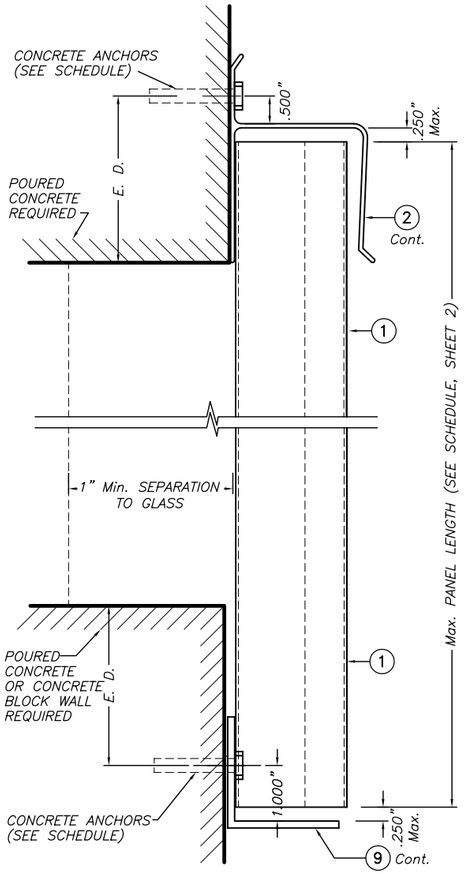

SECTION @ ANCHOR

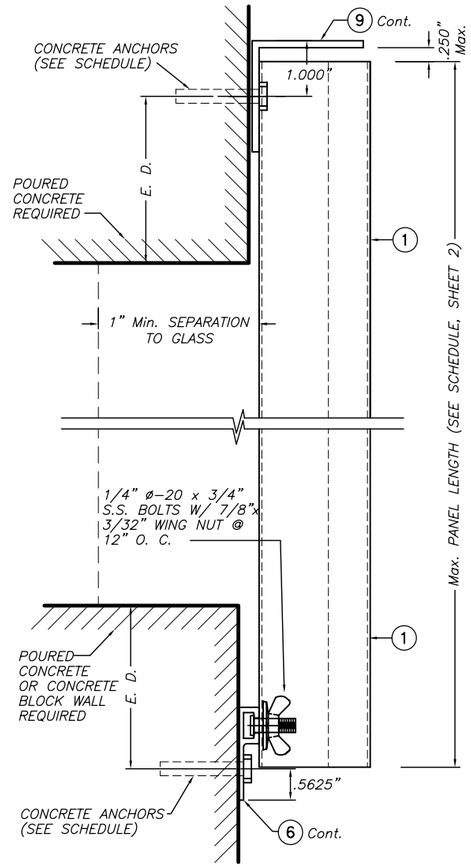

WALL MOUNTING INSTALLATION
SECTION 2

SCALE : 1/2" = 1"

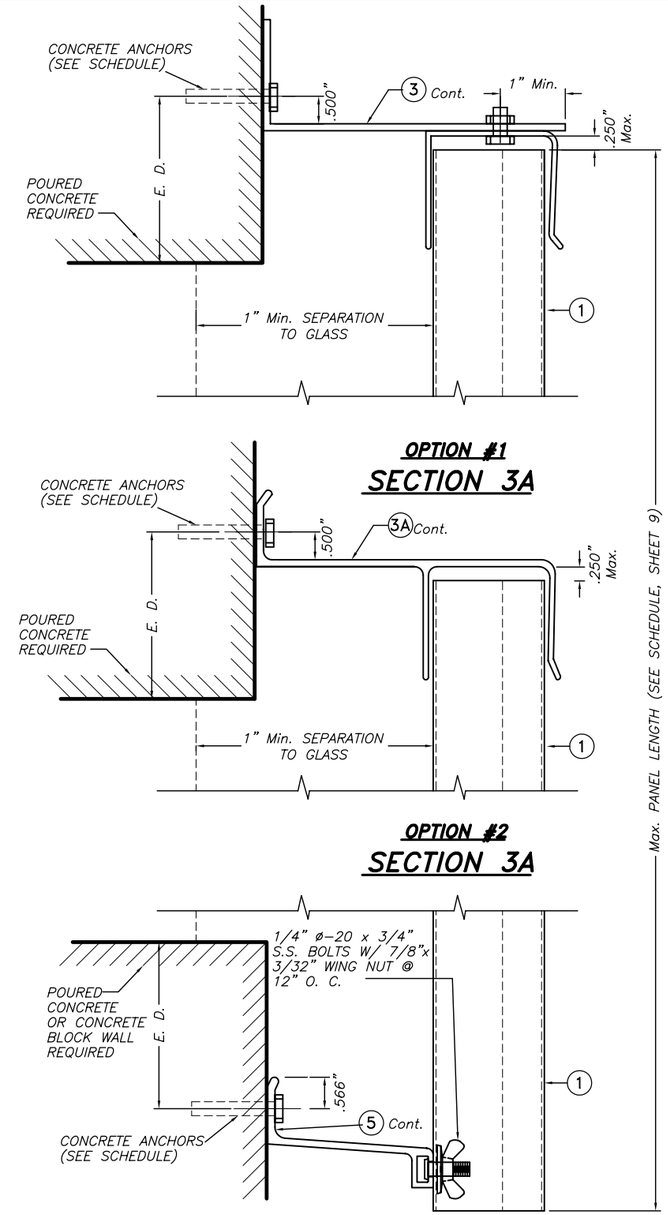

BUILD OUT INSTALLATION
SECTION 3

SCALE : 1/2" = 1"

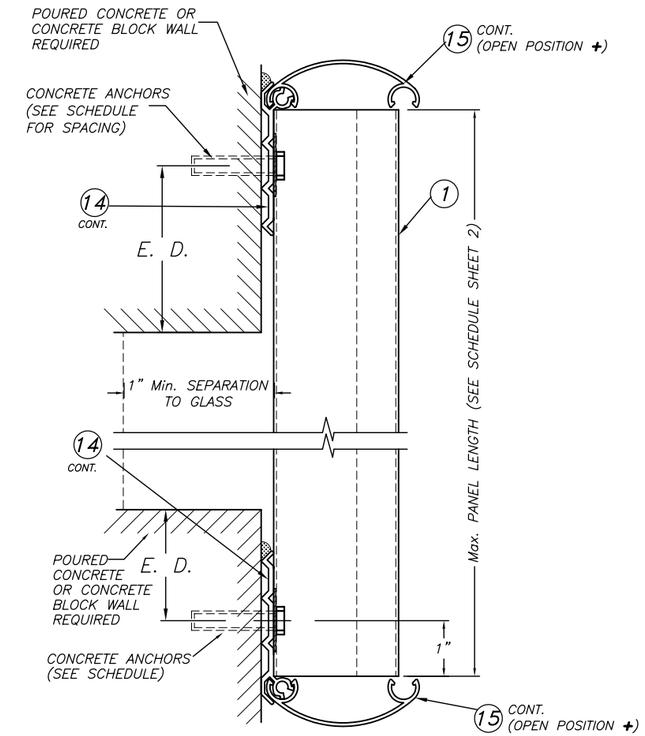

SECTION @ ANCHOR

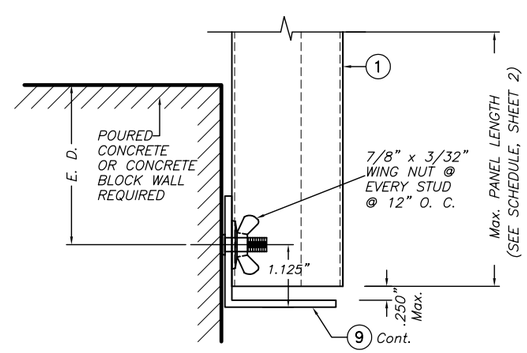

SECTION @ STUD

WALL MOUNTING INSTALLATION
SECTION 1

SCALE : 1/2" = 1"

NOTE : DETAIL OF SECTION @ STUD VALID ALSO FOR WALL MOUNTING INSTALLATION – SECTION 2 (TOP)

E. D. = EDGE DISTANCE (SEE SCHEDULE ON SHEETS 9 & 10 & 11)

NOTE FOR COMBINATION OF SECTIONS :

WALL MOUNTING SECTIONS CAN BE COMBINED IN ANY WAY TO SUIT ANY INSTALLATION.

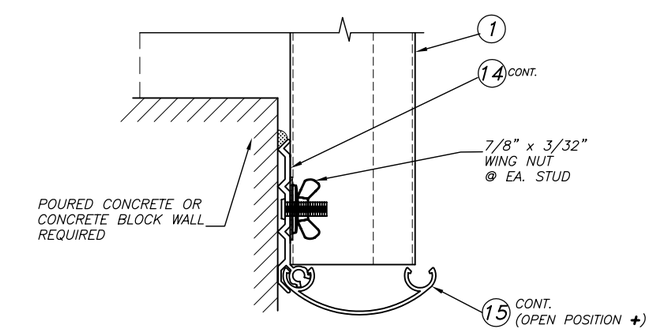

SECTION @ STUD
TYP. TOP/BOTTOM

WALL MOUNTING INSTALLATION
SECTION 4

SCALE : 1/2" = 1"

+ NOTE: SNAP CAP 15 TO REMAIN CLOSED AT NON HURRICANE CONDITIONS.

T.D.I. 2003

TILTECO INC.
TILLIT TESTING & ENGINEERING COMPANY
6355 N.W. 36th. St., Ste. 305, VIRGINIA GARDENS, Fl. 33166
Phone : (305)871-1530 , Fax : (305)871-1531
EB-0006719
WALTER A. TILLIT Jr., P. E.
FLORIDA Lic. 44167

0.050" BERTHA ALUMINUM STORM PANEL (2.00" DEEP)

EASTERN METAL SUPPLY, INC
9400 TELGE ROAD
HOUSTON,TX. 77095

REV. NO	DESCRIPTION	DATE	REV. No	DESCRIPTION	DATE
1	OLD DWG 05-175	6/26/06	3		
2			4		

L.G. DRAWN BY:
6/26/06 DATE
06-171 DRAWING No
SHEET 4 OF 17

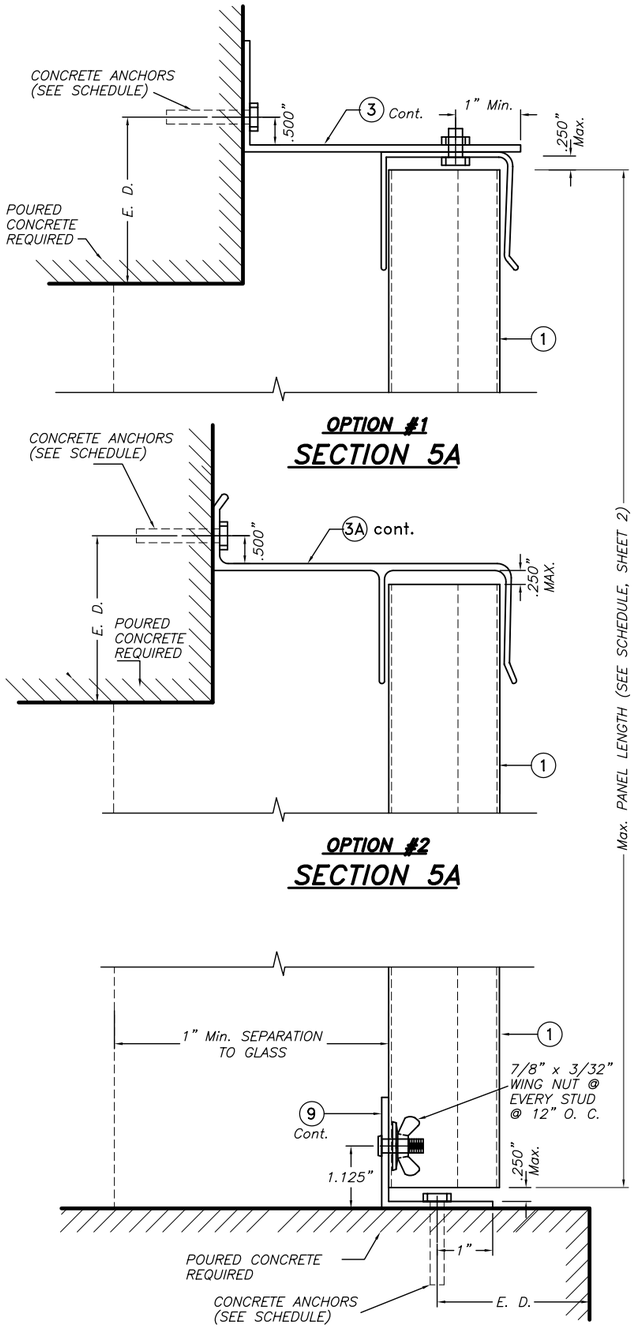

BUILD-OUT & FLOOR MOUNTING INSTALLATION – SECTION 5

SCALE : 1/2" = 1"

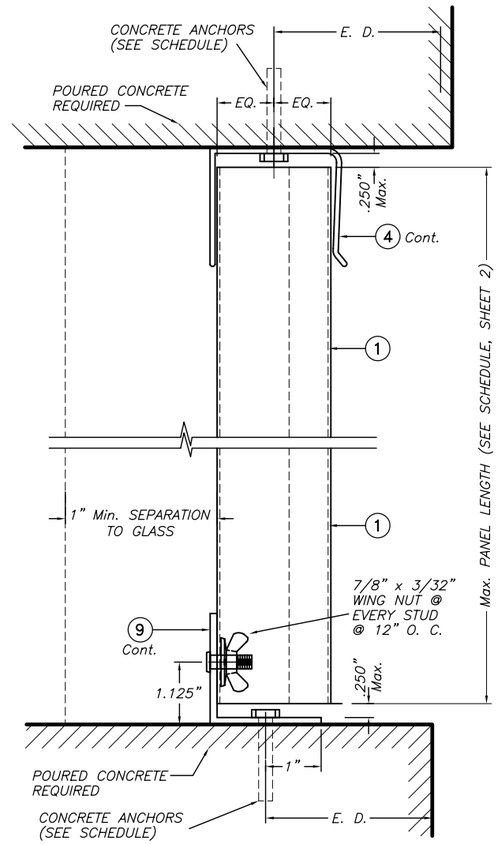

CEILING & FLOOR MOUNTING INSTALLATION – SECTION 6

SCALE : 1/2" = 1"

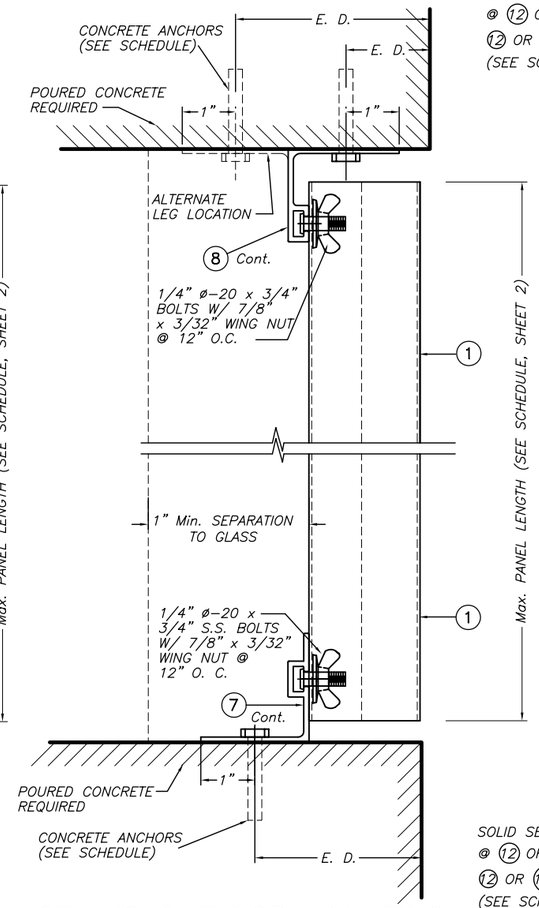

CEILING & FLOOR MOUNTING INSTALLATION – SECTION 7

SCALE : 1/2" = 1"

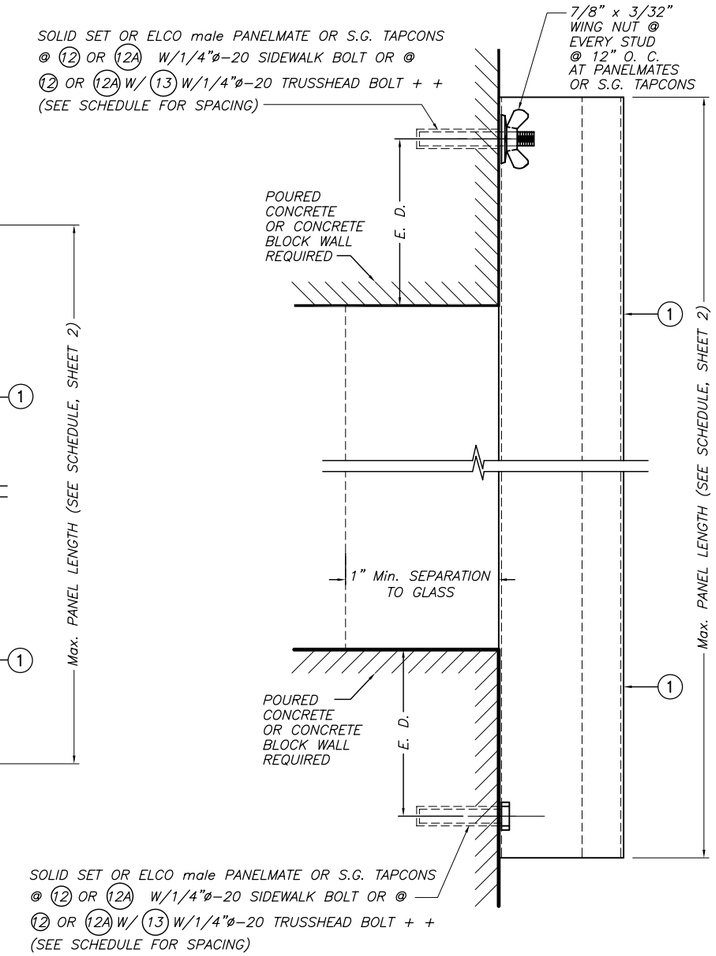

DIRECT WALL MOUNTING INSTALLATION (D. M.) – SECTION 8

SCALE : 1/2" = 1"

E. D. = EDGE DISTANCE (SEE SCHEDULE ON SHEETS 9 & 10 & 11)

NOTE FOR COMBINATION OF SECTIONS :

WALL/FLOOR/CEILING MOUNTING SECTIONS CAN BE COMBINED IN ANY WAY TO SUIT ANY INSTALLATION.

T.D.I. 2003

TILTECO INC.
TILLIT TESTING & ENGINEERING COMPANY
6355 N.W. 36th. St., Ste. 305, VIRGINIA GARDENS, Fl. 33166
Phone : (305)871-1530 . Fax : (305)871-1531
EB-0006719
WALTER A. TILLIT Jr., P. E.
FLORIDA Lic. 44167

0.050" BERTHA ALUMINUM STORM PANEL (2.00" DEEP)

EASTERN METAL SUPPLY, INC
9400 TELGE ROAD
HOUSTON,TX. 77095

REV. NO	DESCRIPTION	DATE	REV. No	DESCRIPTION	DATE
1	OLD DWG 05-175	6/26/06	3		
2			4		

L.G.
DRAWN BY:

6/26/06
DATE

06-171
DRAWING No

SHEET 5 OF 17

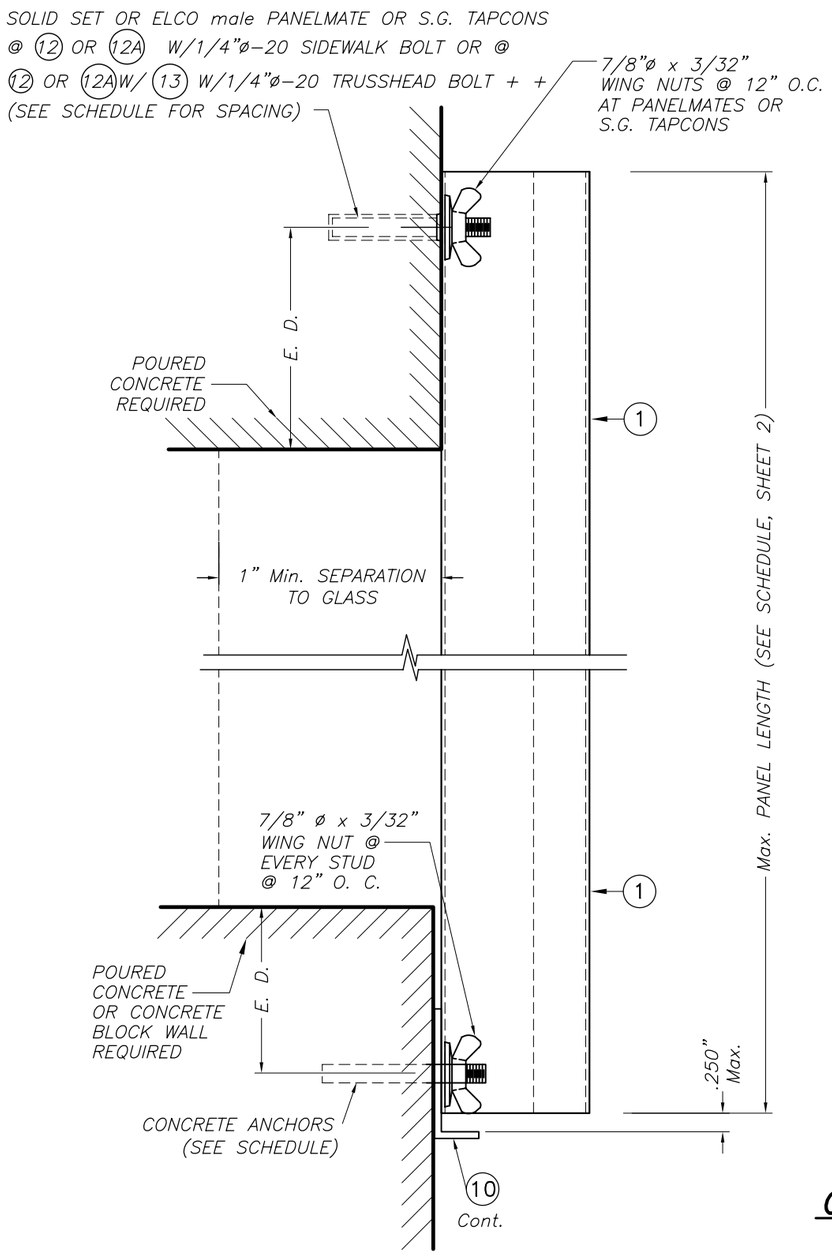

WALL MOUNTING INSTALLATION

SECTION 9

SCALE : 1/2" = 1"

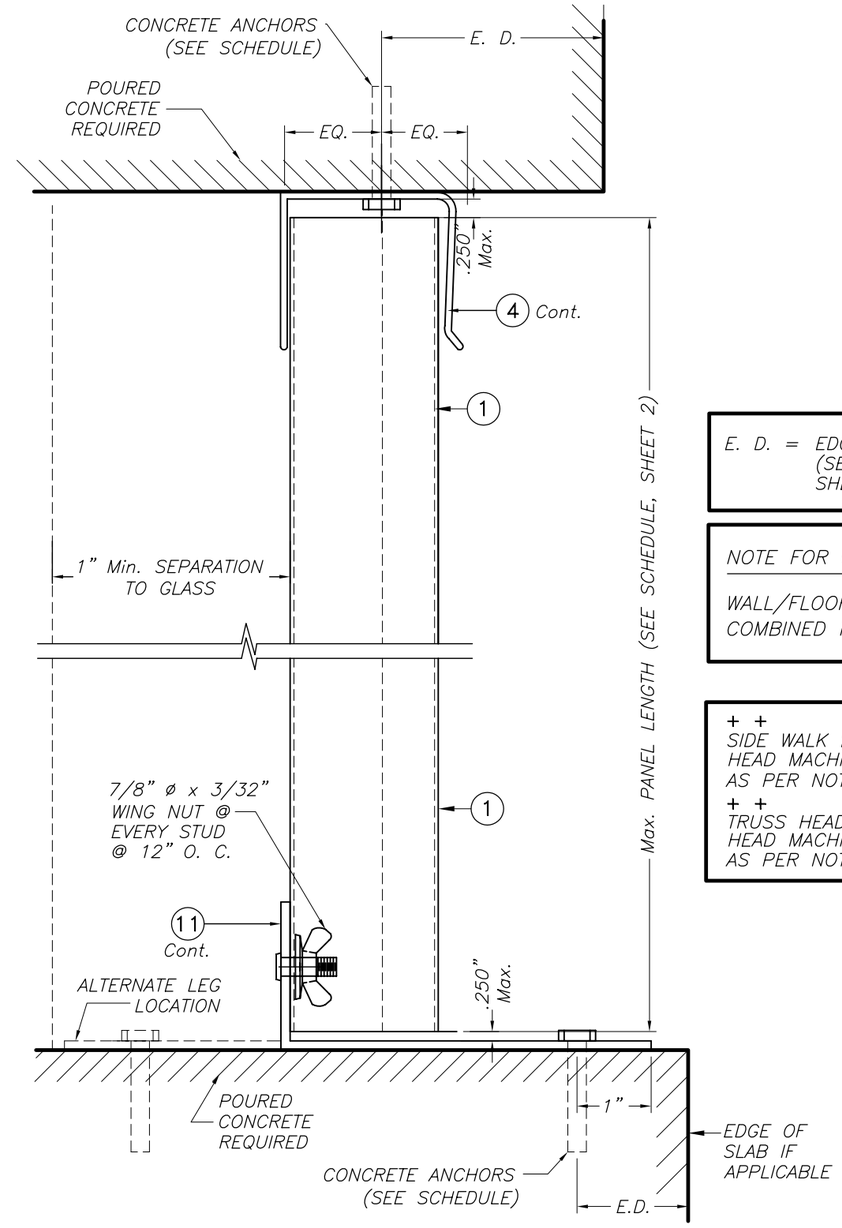

CEILING & FLOOR MOUNTING INSTALLATION

SECTION 10

SCALE : 1/2" = 1"

E. D. = EDGE DISTANCE
(SEE SCHEDULE ON
SHEETS 9 & 10 & 11)

NOTE FOR COMBINATION OF SECTIONS :

WALL/FLOOR/CEILING MOUNTING SECTIONS CAN BE COMBINED IN ANY WAY TO SUIT ANY INSTALLATION.

+ +
SIDE WALK BOLTS ARE 3/4"ø x 3/32" THICK
HEAD MACHINE SCREW W/LENGTH
AS PER NOTES A.2 & B.2 (SHEET 1)
+ +
TRUSS HEAD BOLTS ARE 1/2"ø x 1/8" THICK
HEAD MACHINE SCREW W/LENGTH
AS PER NOTES A.2 & B.2 (SHEET 1)

T.D.I. 2003

TILTECO INC.
TILLIT TESTING & ENGINEERING COMPANY
6355 N.W. 36th. St., Ste. 305, VIRGINIA GARDENS, Fl. 33166
Phone : (305)871-1530 . Fax : (305)871-1531
EB-0006719
WALTER A. TILLIT Jr., P. E.
FLORIDA Lic. 44167

0.050" BERTHA ALUMINUM STORM PANEL (2.00" DEEP)

EASTERN METAL SUPPLY, INC
9400 TELGE ROAD
HOUSTON,TX. 77095

REV. NO	DESCRIPTION	DATE	REV. No	DESCRIPTION	DATE
1	OLD DWG 05-175	6/26/06	3		
2			4		

L.G.
DRAWN BY:

6/26/06
DATE

06-171
DRAWING No

SHEET 6 OF 17

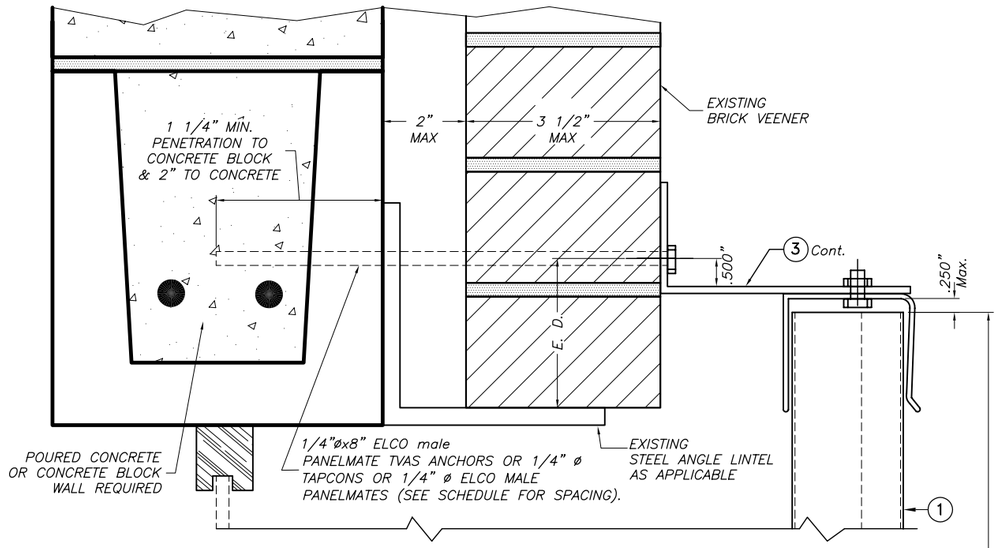

OPTION #1

SECTION 11A

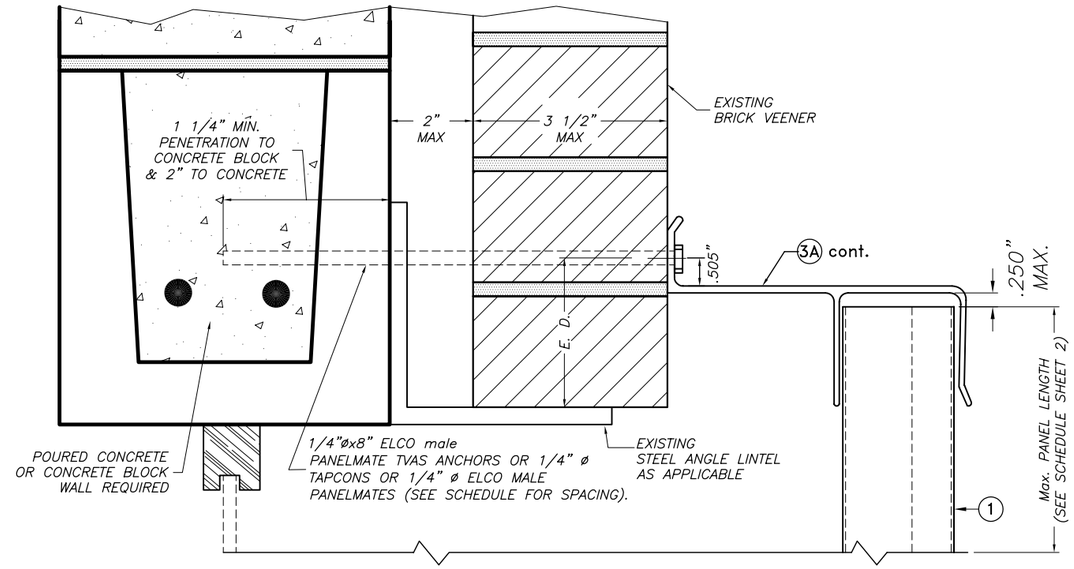

OPTION #2

SECTION 11A

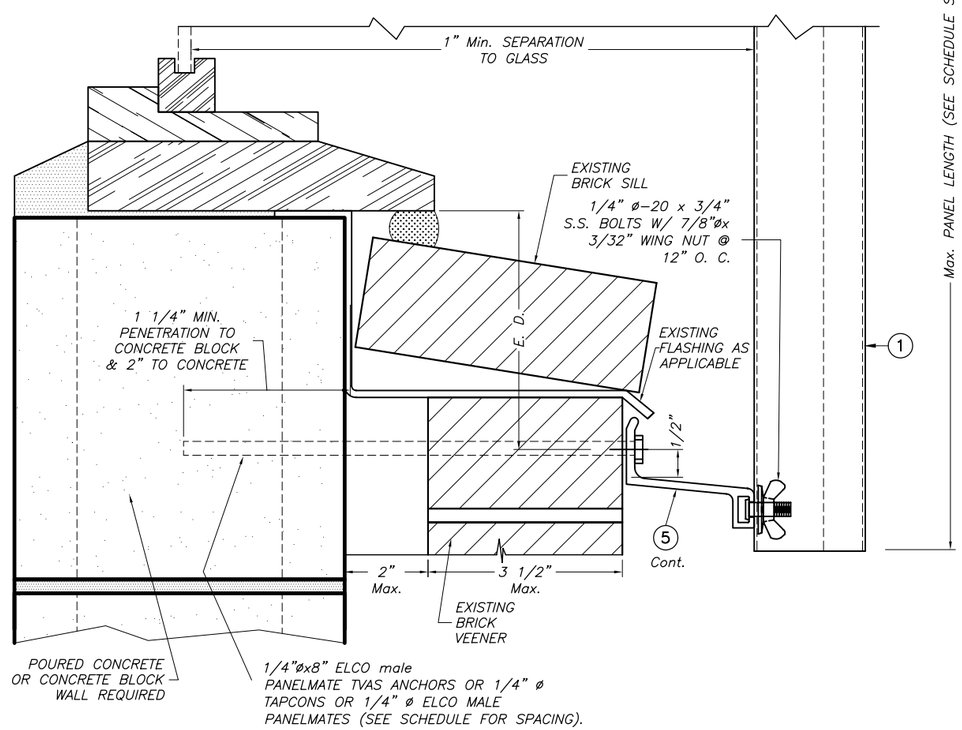

BUILD OUT INSTALLATION
SECTION 11

SCALE : 3/8" = 1"

E. D. = EDGE DISTANCE
(SEE SCHEDULE ON
SHEETS 9 & 10 & 11)

NOTE FOR COMBINATION OF SECTIONS :

WALL/FLOOR/CEILING MOUNTING SECTIONS CAN BE COMBINED IN ANY WAY TO SUIT ANY INSTALLATION.

+ +
SIDE WALK BOLTS ARE 3/4"øx3/32"THICK
HEAD MACHINE SCREW W/LENGTH
AS PER NOTES A.2 & B.2 (SHEET 1)
+ +
TRUSS HEAD BOLTS ARE 1/2"øx1/8"THICK
HEAD MACHINE SCREW W/LENGTH
AS PER NOTES A.2 & B.2 (SHEET 1)

T.D.I. 2003

TILTECO INC.
TILLIT TESTING & ENGINEERING COMPANY
6355 N.W. 36th. St., Ste. 305, VIRGINIA GARDENS, Fl. 33166
Phone : (305)871-1530 . Fax : (305)871-1531
EB-0006719
WALTER A. TILLIT Jr., P. E.
FLORIDA Lic. 44167

0.050" BERTHA ALUMINUM STORM PANEL (2.00" DEEP)

EASTERN METAL SUPPLY, INC

9400 TELGE ROAD
HOUSTON,TX. 77095

REV. NO	DESCRIPTION	DATE	REV. No	DESCRIPTION	DATE
1	OLD DWG 05-175	6/26/06	3		
2			4		

L.G.
DRAWN BY:

6/26/06
DATE

06-171
DRAWING No

SHEET 6A OF 17

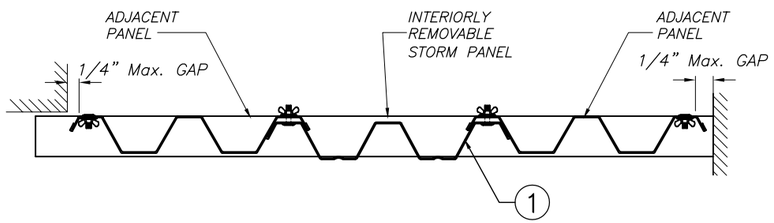

SECTION B–B

SCALE : 1 1/2" = 1"

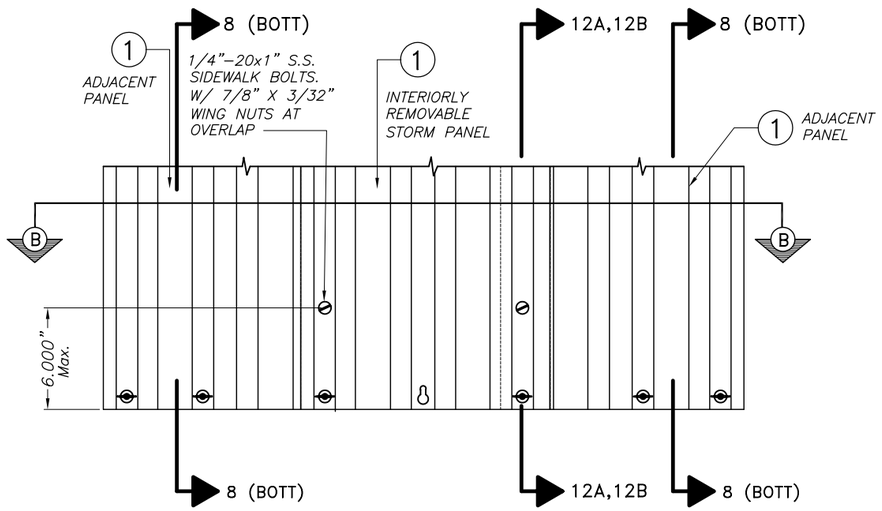

INTERIORLY REMOVABLE STORM PANEL PARTIAL ELEVATION

SCALE : 1 1/2" = 1"

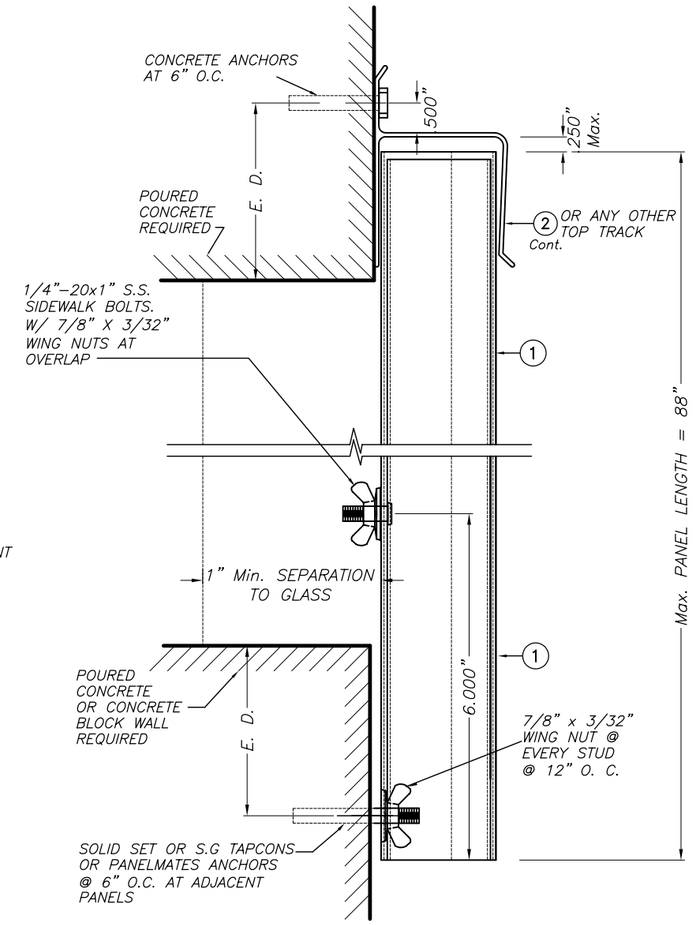

WALL MOUNTING INSTALLATION SECTION 12A

SCALE : 1/2" = 1"

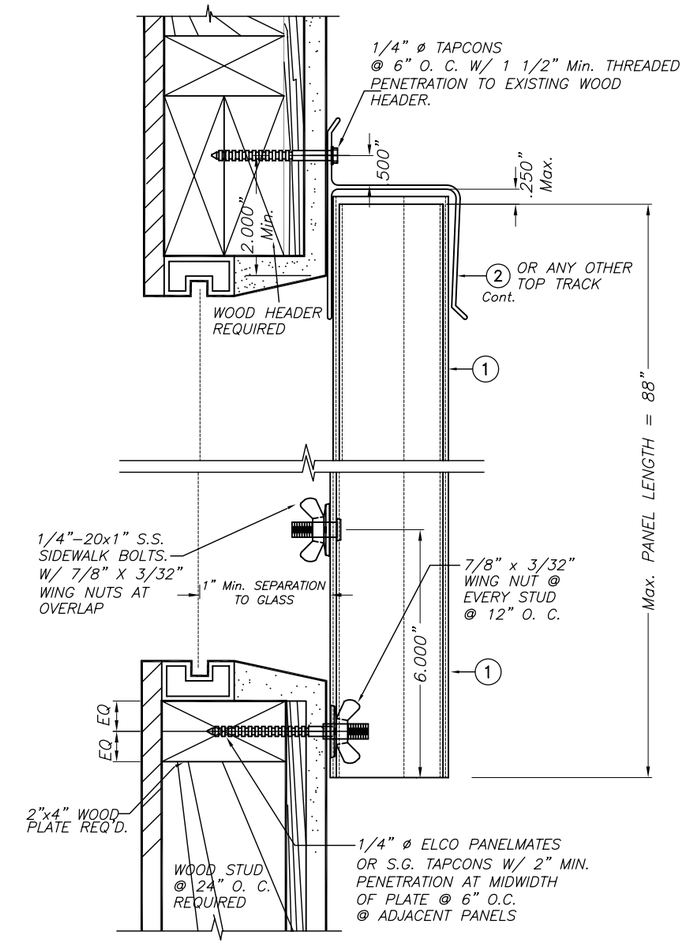

WALL MOUNTING INSTALLATION SECTION 12B

SCALE : 1/2" = 1"

INTERIORLY REMOVABLE STORM PANEL SECTIONS

MAX. DESIGN LOAD = +50.0, −50.0 p.s.f.

T.D.I. 2003

TILTECO INC.
TILLIT TESTING & ENGINEERING COMPANY
6355 N.W. 36th. St., Ste. 305, VIRGINIA GARDENS, Fl. 33166
Phone : (305)871–1530 . Fax : (305)871–1531
EB–0006719
WALTER A. TILLIT Jr., P. E.
FLORIDA Lic. 44167

0.050" BERTHA ALUMINUM STORM PANEL (2.00" DEEP)

EASTERN METAL SUPPLY, INC

9400 TELGE ROAD
HOUSTON,TX. 77095

REV. NO	DESCRIPTION	DATE	REV. No	DESCRIPTION	DATE
1	OLD DWG 05–175	6/26/06	3		
2	PANEL LIP	8/21/07	4		

L.G.
DRAWN BY:

6/26/06
DATE

06–171
DRAWING No

SHEET 7 OF 17

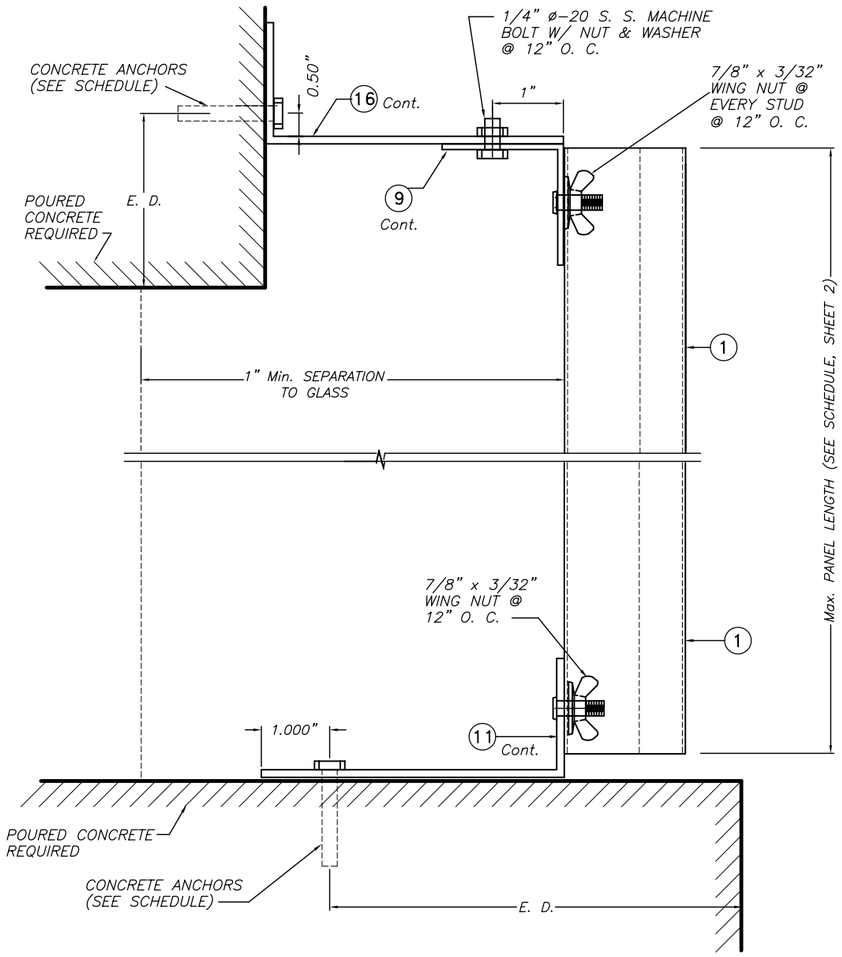

CEILING & FLOOR MOUNTING INSTALLATION – SECTION 13

SCALE : 1/2" = 1"

E. D. = EDGE DISTANCE (SEE SCHEDULE ON SHEETS 9,10 & 11)

NOTE FOR COMBINATION OF SECTIONS :

WALL/FLOOR/CEILING MOUNTING SECTIONS CAN BE COMBINED IN ANY WAY TO SUIT ANY INSTALLATION.

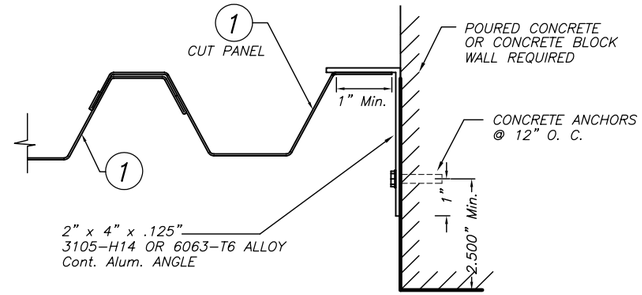

CASE A (Plan)

SCALE: 1/4" = 1"

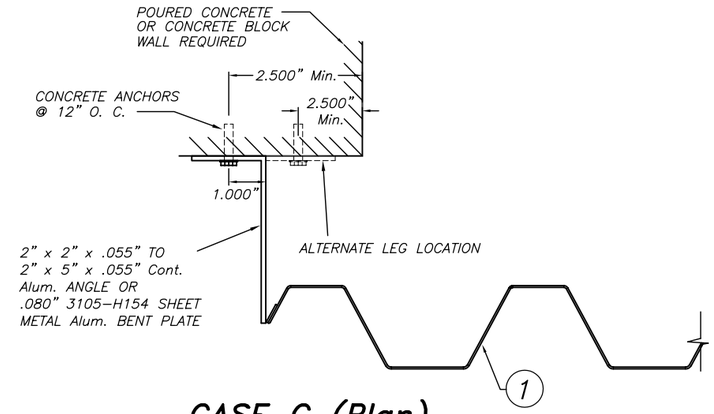

CASE C (Plan)

SCALE: 1/4" = 1"

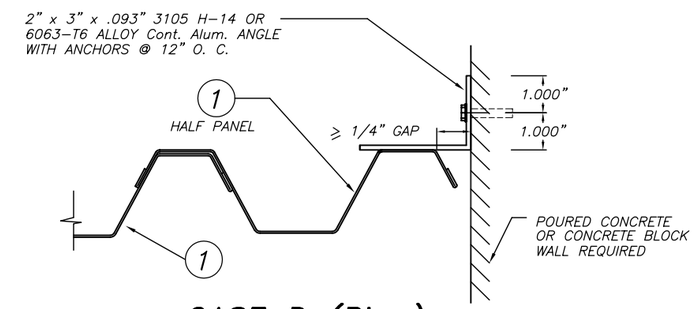

CASE D (Plan)

SCALE: 1/4" = 1"

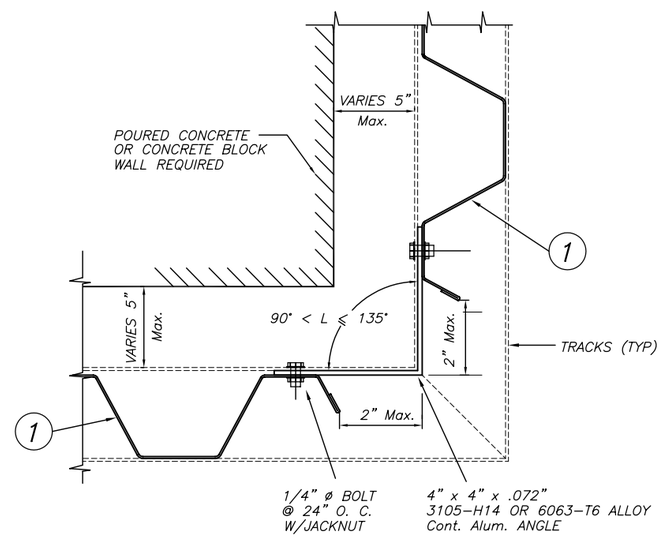

CASE B (Plan)

SCALE: 1/4" = 1"

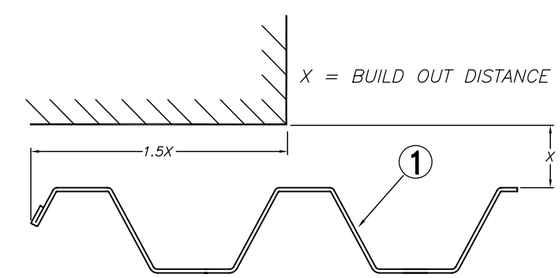

CASE E (Plan)

SCALE: 1/4" = 1"

END CLOSURES DETAILS

T.D.I. 2003

TILTECO INC.
TILLIT TESTING & ENGINEERING COMPANY
6355 N.W. 36th. St., Ste. 305, VIRGINIA GARDENS, Fl. 33166
Phone : (305)871–1530 . Fax : (305)871–1531
EB–0006719
WALTER A. TILLIT Jr., P. E.
FLORIDA Lic. 44167

0.050" BERTHA ALUMINUM STORM PANEL (2.00" DEEP)

EASTERN METAL SUPPLY, INC
9400 TELGE ROAD
HOUSTON,TX. 77095

REV. NO	DESCRIPTION	DATE	REV. No	DESCRIPTION	DATE
1	OLD DWG 05–175	6/26/06	3		
2	PANEL LIP	8/21/07	4		

L.G. DRAWN BY:

6/26/06 DATE

06–171 DRAWING No

MAXIMUM DESIGN PRESSURE RATING "W" (p.s.f.) AND CORRESPONDING MAXIMUM ANCHOR SPACING SCHEDULE FOR INSTALLATIONS IN CONCRETE AND CONCRETE BLOCK STRUCTURES

MAXIMUM DESIGN LOAD W (p.s.f.)	MAXIMUM ANCHORS SPACING FOR E. D. = 3 1/2"**										APPLICABLE TO SECTIONS # & ANY COMBINATION OF THEM	MAXIMUM PANEL LENGTH "L" (ft.)
	REGULAR TAPCONS		SOLID SET		S.G.TAPCON		PANELMATES		PANELMATE TVAS			
	TO CONCRETE	TO MASONRY	TO CONCRETE	TO MASONRY	TO CONCRETE	TO MASONRY	TO CONCRETE	TO MASONRY	TO CONCRETE	TO MASONRY		
+40.0, −40.0 OR LESS	12"	N/A	12"	N/A	12"	N/A	12"	N/A	12"	N/A	1 (TOP)	8'−0" OR LESS
	12"	11"	12"	12"	12"	12"	12"	12"	12"	12"	1 (BOTTOM)	
	12"	N/A	12"	N/A	12"	N/A	12"	N/A	12"	N/A	2 (TOP)	
	9"	9"	9"	9"	9"	9"	9"	9"	9"	9"	2 (BOTTOM)	
	9"	N/A	9"	N/A	9"	N/A	9"	N/A	9"	N/A	3A (TOP)	
	9"	9"	9"	9"	9"	9"	9"	9"	9"	9"	3 (BOTTOM)	
	12"	11"	12"	12"	12"	12"	12"	12"	12"	12"	4 (TOP)	
	12"	11"	12"	12"	12"	12"	12"	12"	12"	12"	4 (BOTTOM)	
	9"	N/A	9"	N/A	9"	N/A	9"	N/A	9"	N/A	5A (TOP)	
	12"	N/A	12"	N/A	12"	N/A	12"	N/A	N/A	N/A	5 (BOTTOM)	
	12"	N/A	12"	N/A	12"	N/A	12"	N/A	N/A	N/A	6 (TOP)	
	12"	N/A	12"	N/A	12"	N/A	12"	N/A	N/A	N/A	6 (BOTTOM)	
	12"	N/A	12"	N/A	12"	N/A	12"	N/A	N/A	N/A	7 (TOP)	
	12"	N/A	12"	N/A	12"	N/A	12"	N/A	N/A	N/A	7 (BOTTOM)	
	N/A	N/A	12"	12"	12"	12"	12"	12"	12"	12"	8 (TOP)	
	N/A	N/A	12"	12"	12"	12"	12"	12"	12"	12"	8 (BOTTOM)	
	N/A	N/A	12"	12"	12"	12"	12"	12"	12"	12"	9 (TOP)	
	12"	11"	12"	12"	12"	12"	12"	12"	12"	12"	9 (BOTTOM)	
	12"	N/A	12"	N/A	12"	N/A	12"	N/A	N/A	N/A	10 (TOP)	
	6"	N/A	6"	N/A	6"	N/A	6"	N/A	N/A	N/A	10 (BOTTOM)	
	9"	N/A	9"	N/A	9"	N/A	9"	N/A	9"	N/A	11A (TOP)	
	9"	9"	9"	9"	9"	9"	9"	9"	9"	9'	11 (BOTTOM)	
	6"	N/A	6"	N/A	6"	N/A	6"	N/A	6"	N/A	13 (TOP)	
	6"	N/A	6"	N/A	6"	N/A	6"	N/A	N/A	N/A	13 (BOTTOM)	

MAXIMUM DESIGN LOAD W (p.s.f.)	MAXIMUM ANCHORS SPACING FOR E. D. = 3 1/2"**										APPLICABLE TO SECTIONS # & ANY COMBINATION OF THEM	MAXIMUM PANEL LENGTH "L" (ft.)
	REGULAR TAPCONS		SOLID SET		S.G.TAPCON		PANELMATES		PANELMATE TVAS			
	TO CONCRETE	TO MASONRY	TO CONCRETE	TO MASONRY	TO CONCRETE	TO MASONRY	TO CONCRETE	TO MASONRY	TO CONCRETE	TO MASONRY		
+40.0, −40.0 OR LESS	12"	N/A	12"	N/A	12"	N/A	12"	N/A	12"	N/A	1 (TOP)	> 8'−0" UP TO 13'−0"*
	12"	7"	12"	12"	12"	12"	12"	12"	12"	12"	1 (BOTTOM)	
	12"	N/A	12"	N/A	12"	N/A	12"	N/A	12"	N/A	2 (TOP)	
	9"	9"	9"	9"	9"	9"	9"	9"	9"	9"	2 (BOTTOM)	
	9"	N/A	9"	N/A	9"	N/A	9"	N/A	9"	N/A	3A (TOP)	
	9"	9"	9"	9"	9"	9"	9"	9"	9"	9"	3 (BOTTOM)	
	12"	7"	12"	12"	12"	12"	12"	12"	12"	12"	4 (TOP)	
	12"	7"	12"	12"	12"	12"	12"	12"	12"	12"	4 (BOTTOM)	
	9"	N/A	9"	N/A	9"	N/A	9"	N/A	9"	N/A	5A (TOP)	
	9"	N/A	11"	N/A	12"	N/A	12"	N/A	N/A	N/A	5 (BOTTOM)	
	9"	N/A	11 1/2"	N/A	12"	N/A	12"	N/A	N/A	N/A	6 (TOP)	
	9"	N/A	11"	N/A	12"	N/A	12"	N/A	N/A	N/A	6 (BOTTOM)	
	9"	N/A	11"	N/A	12"	N/A	12"	N/A	N/A	N/A	7 (TOP)	
	9"	N/A	11"	N/A	12"	N/A	12"	N/A	N/A	N/A	7 (BOTTOM)	
	N/A	N/A	12"*	12"*	12"*	12"*	12"*	12"*	12"*	12"*	8 (TOP)*	
	N/A	N/A	12"*	12"*	12"*	12"*	12"*	12"*	12"*	12"*	8 (BOTTOM)*	
	N/A	N/A	12"*	12"*	12"*	12"*	12"*	12"*	12"*	12"*	9 (TOP)*	
	12"	7"	12"	12"	12"	12"	12"	12"	12"	12"	9 (BOTTOM)	
	9"	N/A	11 1/2"	N/A	12"	N/A	12"	N/A	N/A	N/A	10 (TOP)	
	6"	N/A	6"	N/A	6"	N/A	6"	N/A	N/A"	N/A	10 (BOTTOM)	
	9"	N/A	9"	N/A	9"	N/A	9"	N/A	9"	N/A	11A (TOP)	
	9"	9"	9"	9"	9"	9"	9"	9"	9"	9"	11 (BOTTOM)	
	6"	N/A	6"	N/A	6"	N/A	6"	N/A	6"	N/A	13 (TOP)	
	6"	N/A	6"	N/A	6"	N/A	6"	N/A	6"	N/A	13 (BOTTOM)	

* USE 6" OC FOR PANEL LENGTHS LARGER THAN 10' – 0" AND USE 12" OC AS SHOWN ON SCHEDULE FOR PANELS LENGTHS EQUAL OR SHORTER THAN 10' – 0

** MAXIMUM ANCHOR SPACINGS ARE VALID FOR 3 1/2" EDGE DISTANCE. FOR E. D. LESS THAN 3 1/2", REDUCE ANCHOR SPACING BY MULTIPLYING SPACING SHOWN ON SCHEDULE BY THE FOLLOWING FACTORS. (NOTE: Min. E. D. FOR SOLIDSET ANCHORS IS 3")
FOR THIS OPERATION TO BE POSIBLE, REDUCED SPACING OBTAINED USING FACTOR SHALL NOT BE LESS THAN MINIMUM SPACING INDICATED FOR EACH ANCHOR TYPE AT ANCHORS LEGEND.

ACTUAL E. D.	FACTOR	
	TAPCON (REGULAR OR S.G.) PANELMATE OR PANELMATE TVAS	SOLID SET
3"	.86	.75
2 1/2"	.71	.50
2"	.50	–

ANCHORS LEGEND

ANCHOR TYPE	Min. ANCHOR SPACING
TAPCON (REGULAR OR S.G.) PANELMATE OR PANELMATE TVAS	3.0"
SOLID SET	2.5"

E. D. = EDGE DISTANCE

T.D.I. 2003

TILTECO INC.
TILLIT TESTING & ENGINEERING COMPANY
6355 N.W. 36th. St., Ste. 305, VIRGINIA GARDENS, Fl. 33166
Phone : (305)871–1530 . Fax : (305)871–1531
EB–0006719
WALTER A. TILLIT Jr., P. E.
FLORIDA Lic. 44167

0.050" BERTHA ALUMINUM STORM PANEL (2.00" DEEP)

EASTERN METAL SUPPLY, INC
9400 TELGE ROAD
HOUSTON,TX. 77095

REV. NO	DESCRIPTION	DATE	REV. No	DESCRIPTION	DATE
1	OLD DWG 05–175	6/26/06	3		
2			4		

L.G.
DRAWN BY:

6/26/06
DATE

06–171
DRAWING No

MAXIMUM DESIGN PRESSURE RATING "W" (p.s.f.) AND CORRESPONDING MAXIMUM ANCHOR SPACING SCHEDULE FOR INSTALLATIONS IN CONCRETE AND CONCRETE BLOCK STRUCTURES

MAXIMUM DESIGN LOAD W (p.s.f.)	MAXIMUM ANCHORS SPACING FOR E. D. = 3 1/2"*										APPLICABLE TO SECTIONS # & ANY COMBINATION OF THEM	MAXIMUM PANEL LENGTH "L" (ft.)
	REGULAR TAPCONS		SOLID SET		S.G.TAPCON		PANELMATES		PANELMATE TVAS			
	TO CONCRETE	TO MASONRY	TO CONCRETE	TO MASONRY	TO CONCRETE	TO MASONRY	TO CONCRETE	TO MASONRY	TO CONCRETE	TO MASONRY		
+40.0, −40.0 UP TO +60.0, −60.0	12"	N/A	12"	N/A	12"	N/A	12"	N/A	N/A	N/A	1 (TOP)	8'−0" OR LESS
	12"	7"	12"	12"	12"	12"	12"	12"	12"	12"	1 (BOTTOM)	
	12"	N/A	12"	N/A	12"	N/A	12"	N/A	12"	N/A	2 (TOP)	
	9"	7"	9"	9"	9"	9"	9"	9"	9"	9"	2 (BOTTOM)	
	9"	N/A	9"	N/A	9"	N/A	9"	N/A	9"	N/A	3A (TOP)	
	9"	7"	9"	9"	9"	9"	9"	9"	9"	9"	3 (BOTTOM)	
	12"	7"	12"	12"	12"	12"	12"	12"	12"	12"	4 (TOP)	
	12"	7"	12"	12"	12"	12"	12"	12"	12"	12"	4 (BOTTOM)	
	9"	N/A	9"	N/A	9"	N/A	9"	N/A	9"	N/A	5A (TOP)	
	10"	N/A	12"	N/A	12"	N/A	12"	N/A	N/A	N/A	5 (BOTTOM)	
	10"	N/A	12"	N/A	12"	N/A	12"	N/A	N/A	N/A	6 (TOP)	
	10"	N/A	12"	N/A	12"	N/A	12"	N/A	N/A	N/A	6 (BOTTOM)	
	10"	N/A	12"	N/A	12"	N/A	12"	N/A	N/A	N/A	7 (TOP)	
	10"	N/A	12"	N/A	12"	N/A	12"	N/A	N/A	N/A	7 (BOTTOM)	
	N/A	N/A	12"	12"	12"	12"	12"	12"	12"	12"	8 (TOP)	
	N/A	N/A	12"	12"	12"	12"	12"	12"	12"	12"	8 (BOTTOM)	
	N/A	N/A	12"	12"	12"	12"	12"	12"	12"	12"	9 (TOP)	
	12"	7"	12"	12"	12"	12"	12"	12"	12"	12"	9 (BOTTOM)	
	10"	N/A	12"	N/A	12"	N/A	12"	N/A	N/A	N/A	10 (TOP)	
	6"	N/A	6"	N/A	6"	N/A	6"	N/A	N/A	N/A	10 (BOTTOM)	
	9"	7"	N/A	N/A	N/A	N/A	9"	7"	9"	7"	11A (TOP)	
	9"	7"	N/A	N/A	N/A	N/A	9"	7"	9"	7"	11 (BOTTOM)	
	6"	N/A	6"	N/A	6"	N/A	6"	N/A	N/A	N/A	13 (TOP)	
	6"	N/A	6"	N/A	6"	N/A	6"	N/A	N/A	N/A	13 (BOTTOM)	

MAXIMUM DESIGN LOAD W (p.s.f.)	MAXIMUM ANCHORS SPACING FOR E. D. = 3 1/2"*										APPLICABLE TO SECTIONS # & ANY COMBINATION OF THEM	MAXIMUM PANEL LENGTH "L" (ft.)
	REGULAR TAPCONS		SOLID SET		S.G.TAPCON		PANELMATES		PANELMATE TVAS			
	TO CONCRETE	TO MASONRY	TO CONCRETE	TO MASONRY	TO CONCRETE	TO MASONRY	TO CONCRETE	TO MASONRY	TO CONCRETE	TO MASONRY		
+60.0, −60.0 UP TO +80.0, −90.0	11"	N/A	11"	N/A	11"	N/A	11"	N/A	11"	N/A	1 (TOP)	9'−0" OR LESS
	11"	4"	11"	11"	11"	11"	11"	7"	11"	7"	1 (BOTTOM)	
	11"	N/A	11"	N/A	11"	N/A	11"	N/A	11"	N/A	2 (TOP)	
	8"	4"	9"	9"	9"	9"	9"	7"	9"	7"	2 (BOTTOM)	
	9"	N/A	9"	N/A	9"	N/A	9"	N/A	9"	N/A	3A (TOP)	
	8"	4"	9"	9"	9"	9"	9"	7"	9"	7"	3 (BOTTOM)	
	11"	4"	11"	11"	11"	11"	11"	7"	11"	7"	4 (TOP)	
	11"	4"	11"	11"	11"	11"	11"	7"	11"	7"	4 (BOTTOM)	
	9"	N/A	9"	N/A	9"	N/A	9"	N/A	9"	N/A	5A (TOP)	
	5"	8"	7"	N/A	9"	N/A	8"	N/A	N/A	N/A	5 (BOTTOM)	
	9"	N/A	10"	N/A	12"	N/A	11"	N/A	N/A	N/A	6 (TOP)	
	8"	N/A	7"	N/A	9"	N/A	8"	N/A	N/A	N/A	6 (BOTTOM)	
	5"	N/A	7"	N/A	9"	N/A	8"	N/A	N/A	N/A	7 (TOP)	
	5"	N/A	7"	N/A	9"	N/A	8"	N/A	N/A	N/A	7 (BOTTOM)	
	N/A	N/A	12"	12"	12"	12"	12"	6"	12"	6"	8 (TOP)	
	N/A	N/A	12"	12"	12"	12"	12"	6"	12"	6"	8 (BOTTOM)	
	N/A	N/A	12"	12"	12"	12"	12"	6"	12"	6"	9 (TOP)	
	11"	4"	11"	11"	11"	11"	11"	7"	11"	7"	9 (BOTTOM)	
	9"	N/A	10"	N/A	12"	N/A	11"	N/A	N/A	N/A	10 (TOP)	
	6"	N/A	6"	N/A	6"	N/A	6"	N/A	N/A	N/A	10 (BOTTOM)	
	8"	4"	N/A	N/A	N/A	N/A	9"	7"	9"	7"	11A (TOP)	
	8"	4"	N/A	N/A	N/A	N/A	9"	7"	9"	7"	11 (BOTTOM)	
	6"	N/A	6"	N/A	6"	N/A	6"	N/A	N/A	N/A	13 (TOP)	
	6"	N/A	12""	N/A	6"	N/A	6"	N/A	N/A	N/A	13 (BOTTOM)	

* MAXIMUM ANCHOR SPACINGS ARE VALID FOR 3 1/2" EDGE DISTANCE. FOR E. D. LESS THAN 3 1/2", REDUCE ANCHOR SPACING BY MULTIPLYING SPACING SHOWN ON SCHEDULE BY THE FOLLOWING FACTORS. (NOTE: Min. E. D. FOR SOLIDSET ANCHORS IS 3")
FOR THIS OPERATION TO BE POSIBLE, REDUCED SPACING OBTAINED USING FACTOR SHALL NOT BE LESS THAN MINIMUM SPACING INDICATED FOR EACH ANCHOR TYPE AT ANCHORS LEGEND.

ACTUAL E. D.	FACTOR	
	TAPCON (REGULAR OR S.G.) PANELMATE OR PANELMATE TVAS	SOLID SET
3"	.86	.75
2 1/2"	.71	.50
2"	.50	–

ANCHORS LEGEND

ANCHOR TYPE	Min. ANCHOR SPACING
TAPCON (REGULAR OR S.G.) PANELMATE OR PANELMATE TVAS	3.0"
SOLID SET	2.5"

T.D.I. 2003

TILTECO INC.
TILLIT TESTING & ENGINEERING COMPANY
6355 N.W. 36th. St., Ste. 305, VIRGINIA GARDENS, Fl. 33166
Phone : (305)871−1530 . Fax : (305)871−1531
EB−0006719
WALTER A. TILLIT Jr., P. E.
FLORIDA Lic. 44167

0.050" BERTHA ALUMINUM STORM PANEL (2.00" DEEP)

EASTERN METAL SUPPLY, INC
9400 TELGE ROAD
HOUSTON,TX. 77095

REV. NO	DESCRIPTION	DATE	REV. No	DESCRIPTION	DATE
1	OLD DWG 05−175	6/26/06	3		
2			4		

L.G.
DRAWN BY:

6/26/06
DATE

06−171
DRAWING No

MAXIMUM DESIGN PRESSURE RATING "W" (p.s.f.) AND CORRESPONDING MAXIMUM ANCHOR SPACING SCHEDULE FOR INSTALLATIONS IN CONCRETE AND CONCRETE BLOCK STRUCTURES

MAXIMUM DESIGN LOAD W (p.s.f.)	MAXIMUM ANCHORS SPACING FOR E. D. = 3 1/2"**										APPLICABLE TO SECTIONS # & ANY COMBINATION OF THEM	MAXIMUM PANEL LENGTH "L" (ft.)
	REGULAR TAPCONS		SOLID SET		S.G.TAPCON		PANELMATES		PANELMATE TVAS			
	TO CONCRETE	TO MASONRY	TO CONCRETE	TO MASONRY	TO CONCRETE	TO MASONRY	TO CONCRETE	TO MASONRY	TO CONCRETE	TO MASONRY		
+40.0, −40.0 UP TO +60.0, −60.0	12"	N/A	12"	N/A	12"	N/A	12"	N/A	12"	N/A	1 (TOP)	>8'−0" UP TO 12'−6"
	12"	4 1/2"	12"	12"	12"	12"	12"	8 1/2"	12"	8 1/2"	1 (BOTTOM)	
	12"	N/A	12"	N/A	12"	N/A	12"	N/A	12"	N/A	2 (TOP)	
	9"	4 1/2"	9"	9"	9"	9"	9"	8 1/2"	9"	8 1/2"	2 (BOTTOM)	
	9"	N/A	9"	N/A	9"	N/A	9"	N/A	9"	N/A	3A (TOP)	
	9"	4 1/2"	9"	9"	9"	9"	9"	8 1/2"	9"	8 1/2"	3 (BOTTOM)	
	12"	4 1/2"	12"	12"	12"	12"	12"	8 1/2"	12"	8 1/2"	4 (TOP)	
	12"	4 1/2"	12"	12"	12"	12"	12"	8 1/2"	12"	8 1/2"	4 (BOTTOM)	
	9"	N/A	9"	N/A	9"	N/A	9"	N/A	9"	N/A	5A (TOP)	
	6 1/2"	N/A	7 1/2"	N/A	8"	N/A	7 1/2"	N/A	N/A	N/A	5 (BOTTOM)	
	9"	N/A	9 1/2"	N/A	10"	N/A	9 1/2"	N/A	N/A	N/A	6 (TOP)	
	6 1/2"	N/A	7 1/2"	N/A	8"	N/A	7 1/2"	N/A	N/A	N/A	6 (BOTTOM)	
	6"	N/A	6 1/2"	N/A	7"	N/A	6 1/2"	N/A	N/A	N/A	7 (TOP)	
	6"	N/A	6 1/2"	N/A	7"	N/A	6 1/2"	N/A	N/A	N/A	7 (BOTTOM)	
	N/A	N/A	12" *	12" *	12" *	12" *	12" *	6" *	12" *	6" *	8 (TOP) *	
	N/A	N/A	12" *	12" *	12" *	12" *	12" *	6" *	12" *	6" *	8 (BOTTOM) *	
	N/A	N/A	12" *	12" *	12" *	12" *	12" *	6" *	12" *	6" *	9 (TOP) *	
	12"	4 1/2"	12"	12"	12"	12"	12"	8 1/2"	12"	8 1/2"	9 (BOTTOM)	
	9"	N/A	9 1/2"	N/A	10"	N/A	9 1/2"	N/A	N/A	N/A	10 (TOP)	
	6"	N/A	6 "	N/A	6"	N/A	6"	N/A	N/A	N/A	10 (BOTTOM)	
	9"	4 1/2"	N/A	N/A	N/A	N/A	9"	4 1/2"	9"	4 1/2"	11A (TOP)	
	9"	4 1/2"	N/A	N/A	N/A	N/A	9"	4 1/2"	9"	4 1/2"	11 (BOTTOM)	
	6"	N/A	6 "	N/A	6"	N/A	6"	N/A	N/A	N/A	13 (TOP)	
	6"	N/A	6 "	N/A	6"	N/A	6"	N/A	N/A	N/A	13 (BOTTOM)	

MAXIMUM DESIGN LOAD W (p.s.f.)	MAXIMUM ANCHORS SPACING FOR E. D. = 3 1/2"**										APPLICABLE TO SECTIONS # & ANY COMBINATION OF THEM	MAXIMUM PANEL LENGTH "L" (ft.)
	REGULAR TAPCONS		SOLID SET		S.G.TAPCON		PANELMATES		PANELMATE TVAS			
	TO CONCRETE	TO MASONRY	TO CONCRETE	TO MASONRY	TO CONCRETE	TO MASONRY	TO CONCRETE	TO MASONRY	TO CONCRETE	TO MASONRY		
+90.0, −90.0 UP TO +100.0, −130.0	8 1/2"	N/A	9"	N/A	9"	N/A	9"	N/A	9"	N/A	1 (TOP)	7'−0" OR LESS
	9"	7"	9"	9"	9"	9"	9"	7"	9"	7"	1 (BOTTOM)	
	9"	N/A	9"	N/A	9"	N/A	9"	N/A	9"	N/A	2 (TOP)	
	9"	4"	9"	9"	9"	9"	9"	7"	9"	9"	2 (BOTTOM)	
	8"	N/A	9"	N/A	9"	N/A	9"	N/A	9"	N/A	3A (TOP)	
	9"	4"	9"	9"	9"	9"	9"	7"	9"	9"	3 (BOTTOM)	
	9"	7"	9"	9"	9"	9"	9"	7"	9"	7"	4 (TOP)	
	9"	7"	9"	9"	9"	9"	9"	7"	9"	7"	4 (BOTTOM)	
	8"	N/A	9"	N/A	9"	N/A	9"	N/A	9"	N/A	5A (TOP)	
	5"	N/A	6"	N/A	7"	N/A	7"	N/A	N/A	N/A	5 (BOTTOM)	
	7"	N/A	8"	N/A	10"	N/A	8"	N/A	N/A	N/A	6 (TOP)	
	5"	N/A	6"	N/A	7"	N/A	7"	N/A	N/A	N/A	6 (BOTTOM)	
	5"	N/A	6"	N/A	7"	N/A	7"	N/A	N/A	N/A	7 (TOP)	
	5"	N/A	6"	N/A	7"	N/A	7"	N/A	N/A	N/A	7 (BOTTOM)	
	N/A	N/A	12"	6"	12"	6"	12"	6"	12"	6"	8 (TOP)	
	N/A	N/A	12"	6"	12"	6"	12"	6"	12"	6"	8 (BOTTOM)	
	N/A	N/A	12"	6"	12"	6"	12"	6"	12"	6"	9 (TOP)	
	9"	7"	9"	9"	9"	9"	9"	7"	9"	7"	9 (BOTTOM)	
	7"	N/A	8"	N/A	10"	N/A	8"	N/A	N/A	N/A	10 (TOP)	
	5"	N/A	6"	N/A	6'	N/A	6"	N/A	N/A	N/A	10 (BOTTOM)	
	5"	4"	N/A	N/A	N/A	N/A	7"	7"	7"	7"	11A (TOP)	
	5"	4"	N/A	N/A	N/A	N/A	7"	7"	7"	7"	11 (BOTTOM)	
	6"	N/A	6"	N/A	6"	N/A	6"	N/A	N/A	N/A	13 (TOP)	
	5	N/A	6"	N/A	6"	N/A	6"	N/A	N/A	N/A	13 (BOTTOM)	

* USE 6" OC FOR PANEL LENGHTS LARGER THAN 10'−0" AND USE 12" AS SHOWN ON SCHEDULE FOR PANELS LENGHTS EQUAL OR SORTER THAN 10'−0"

** MAXIMUM ANCHOR SPACINGS ARE VALID FOR 3 1/2" EDGE DISTANCE. FOR E. D. LESS THAN 3 1/2", REDUCE ANCHOR SPACING BY MULTIPLYING SPACING SHOWN ON SCHEDULE BY THE FOLLOWING FACTORS. (NOTE: Min. E. D. FOR SOLIDSET ANCHORS IS 3")
FOR THIS OPERATION TO BE POSIBLE, REDUCED SPACING OBTAINED USING FACTOR SHALL NOT BE LESS THAN MINIMUM SPACING INDICATED FOR EACH ANCHOR TYPE AT ANCHORS LEGEND.

ACTUAL E. D.	FACTOR	
	TAPCON (REGULAR OR S.G.) PANELMATE OR PANELMATE TVAS	SOLID SET
3"	.86	.75
2 1/2"	.71	.50
2"	.50	−

ANCHORS LEGEND

ANCHOR TYPE	Min. ANCHOR SPACING
TAPCON (REGULAR OR S.G.) PANELMATE OR PANELMATE TVAS	3.0"
SOLID SET	2.5"

E. D. = EDGE DISTANCE

T.D.I. 2003

TILTECO INC.
TILLIT TESTING & ENGINEERING COMPANY
6355 N.W. 36th. St., Ste. 305, VIRGINIA GARDENS, Fl. 33166
Phone : (305)871−1530 . Fax : (305)871−1531
EB−0006719
WALTER A. TILLIT Jr., P. E.
FLORIDA Lic. 44167

0.050" BERTHA ALUMINUM STORM PANEL (2.00" DEEP)

EASTERN METAL SUPPLY, INC
9400 TELGE ROAD
HOUSTON,TX. 77095

REV. NO	DESCRIPTION	DATE	REV. No	DESCRIPTION	DATE
1	OLD DWG 05−175	6/26/06	3		
2			4		

L.G.
DRAWN BY:

6/26/06
DATE

06−171
DRAWING No

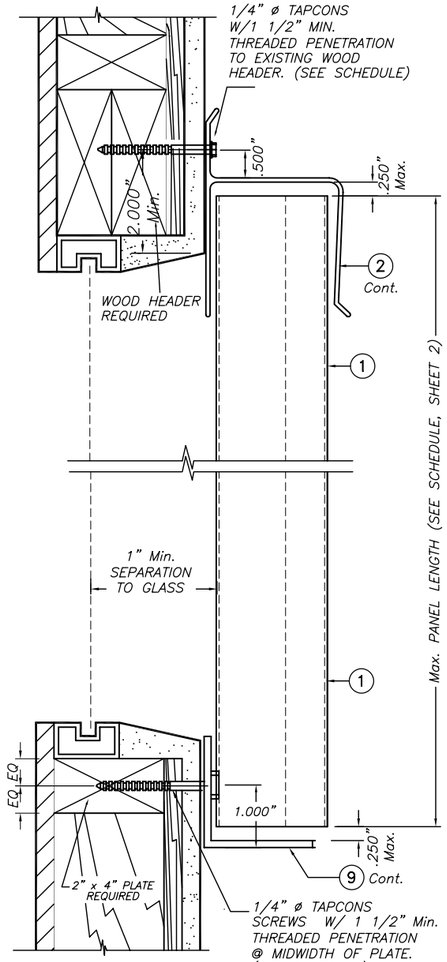

SECTION @ ANCHOR

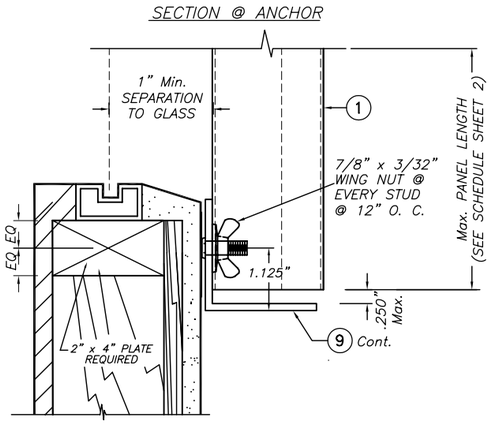

SECTION @ STUD

ALTERNATIVE 1

SCALE : 1/2" = 1"

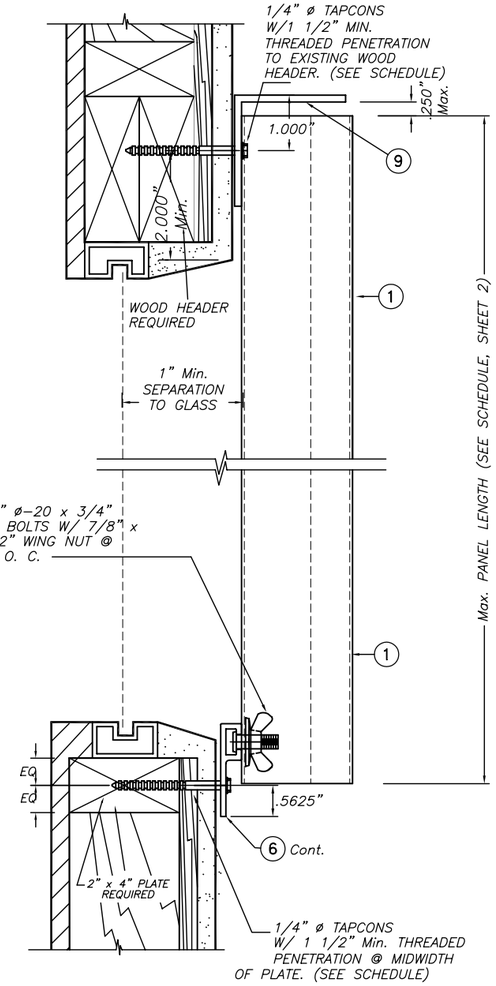

ALTERNATIVE 2

SCALE : 1/2" = 1"

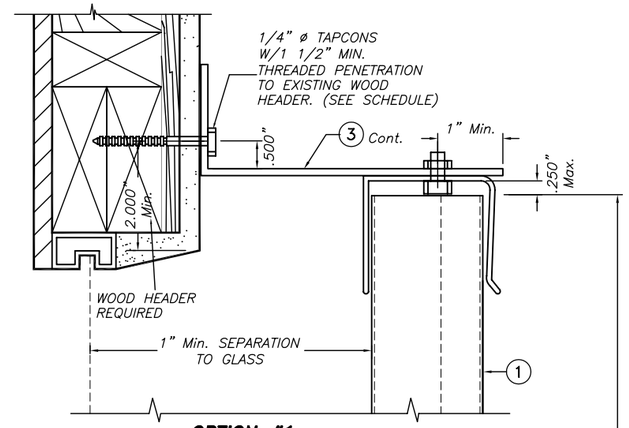

OPTION #1

ALTERNATIVE 3A

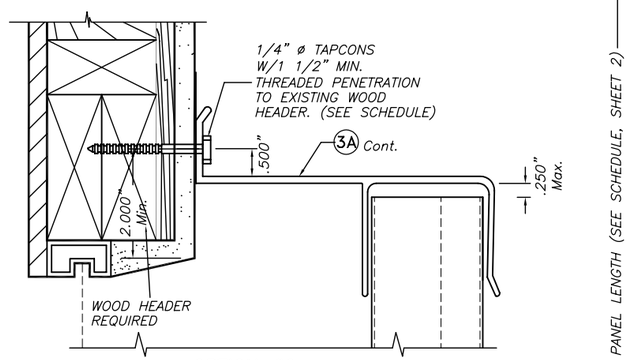

OPTION #2

ALTERNATIVE 3A

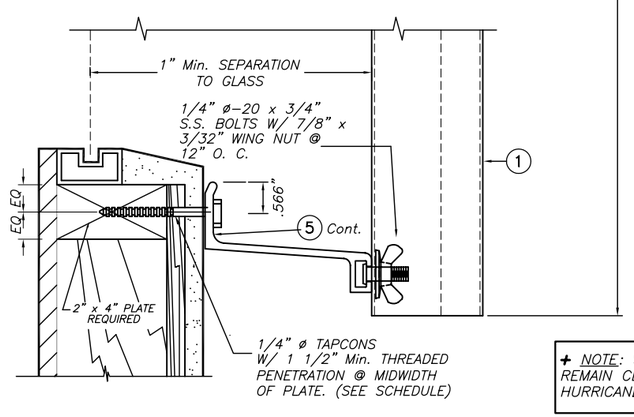

ALTERNATIVE 3

SCALE : 1/2" = 1"

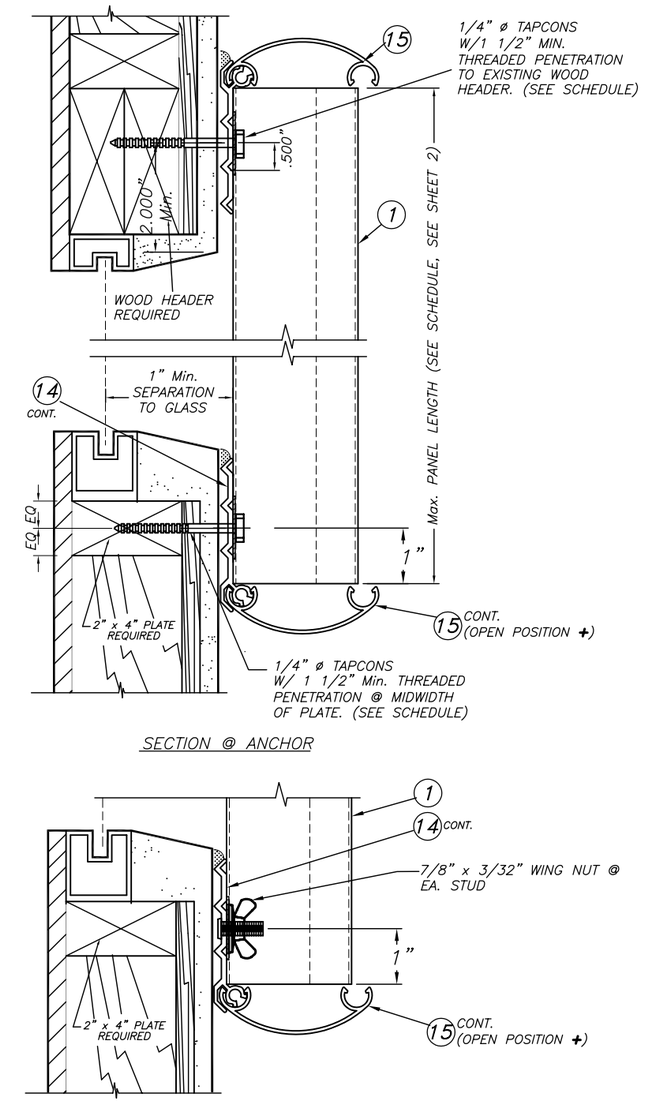

SECTION @ ANCHOR

SECTION @ STUD

ALTERNATIVE 4

SCALE : 1/2" = 1"

NOTE FOR COMBINATION OF SECTIONS :

WALL MOUNTING SECTIONS CAN BE COMBINED IN ANY WAY TO SUIT ANY INSTALLATION.

NOTES:

1. INSTALLATIONS ARE ONLY VALID FOR DESIGN WIND LOADS AND PANEL LENGTHS AS PER SCHEDULES ON SHEET 2
2. SEE ANCHOR SCHEDULE ON SHEETS 16 & 17.
3. FOR NEW WOOD FRAME CONSTRUCTION: WOOD MEMBERS TO BE SOUTHERN PINE No. 2, W/ SPECIFIC DENSITY OF 0.55 OR EQUAL.

+ NOTE: SNAP CAP 15 TO REMAIN CLOSED AT NON HURRICANE CONDITIONS.

T.D.I. 2003

TILTECO INC.
TILLIT TESTING & ENGINEERING COMPANY
6355 N.W. 36th. St., Ste. 305, VIRGINIA GARDENS, Fl. 33166
Phone : (305)871-1530 . Fax : (305)871-1531
EB-0006719
WALTER A. TILLIT Jr., P. E.
FLORIDA Lic. 44167

0.050" BERTHA ALUMINUM STORM PANEL (2.00" DEEP)

EASTERN METAL SUPPLY, INC

9400 TELGE ROAD
HOUSTON,TX. 77095

REV. NO	DESCRIPTION	DATE	REV. No	DESCRIPTION	DATE
1	OLD DWG 05-175	6/26/06	3		
2			4		

L.G.
DRAWN BY:

6/26/06
DATE

06-171
DRAWING No

SHEET 12 OF 17

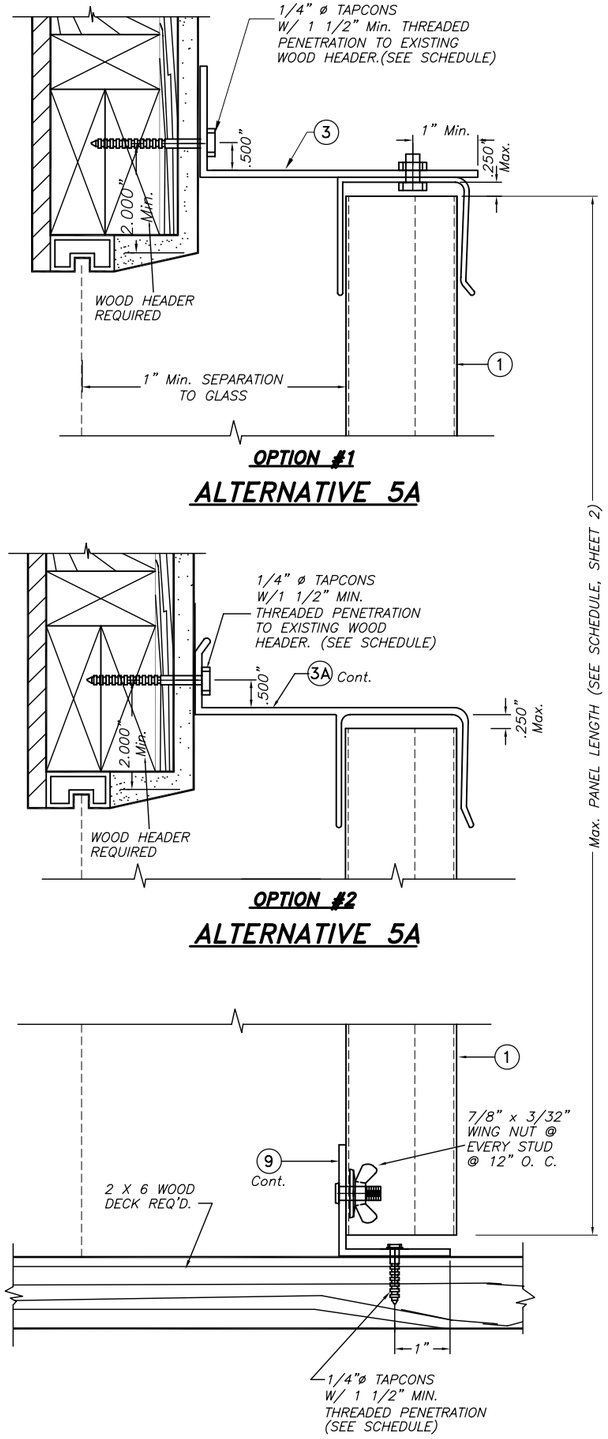

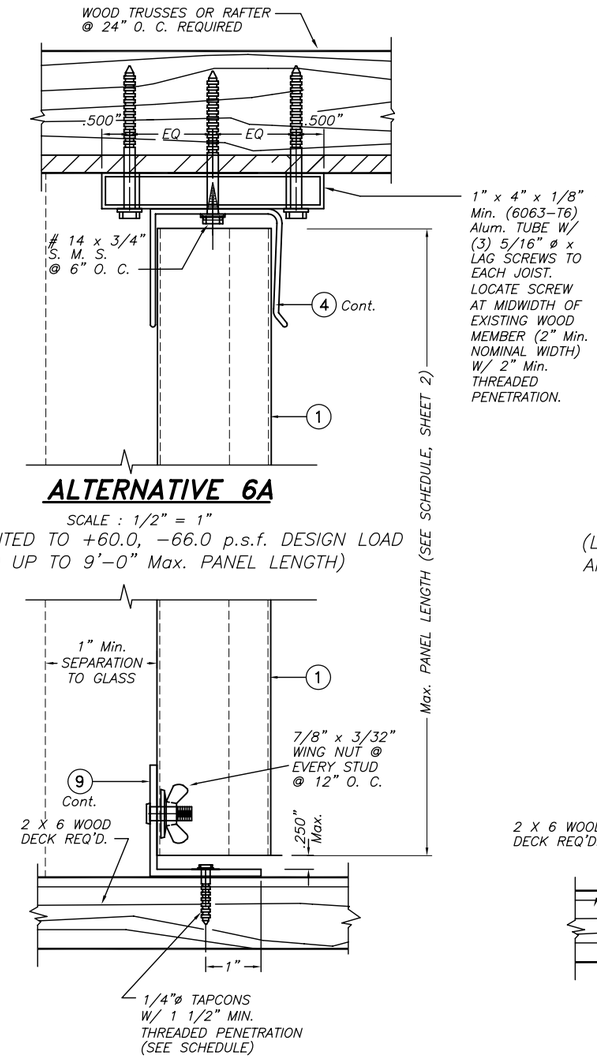

1" x 4" x 1/8"
Min. (6063−T6)
Alum. TUBE W/
(3) 5/16" ø x
LAG SCREWS TO
EACH JOIST.
LOCATE SCREW
AT MIDWIDTH OF
EXISTING WOOD
MEMBER (2" Min.
NOMINAL WIDTH)
W/ 2" Min.
THREADED
PENETRATION.

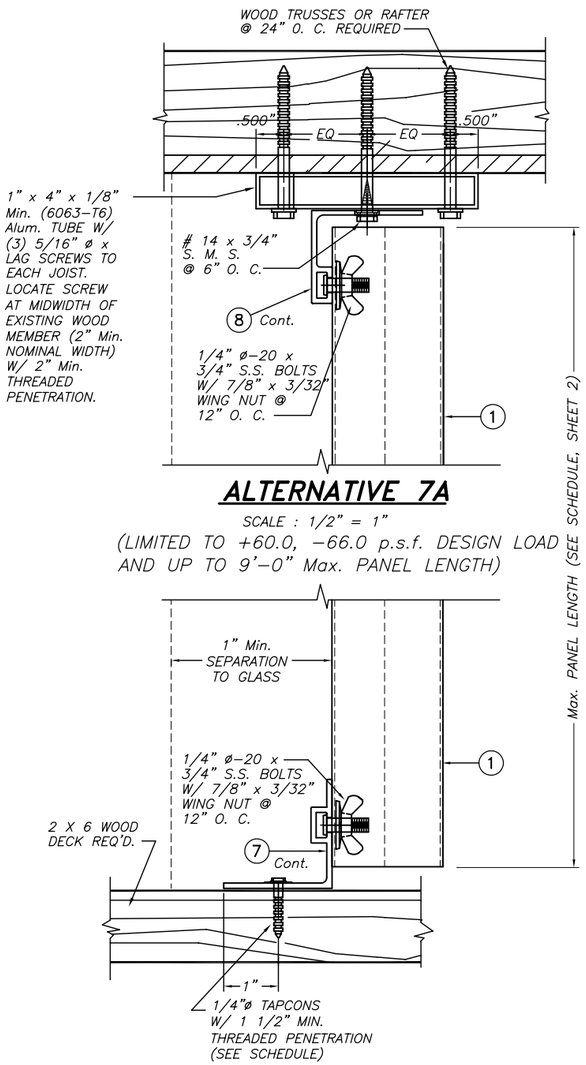

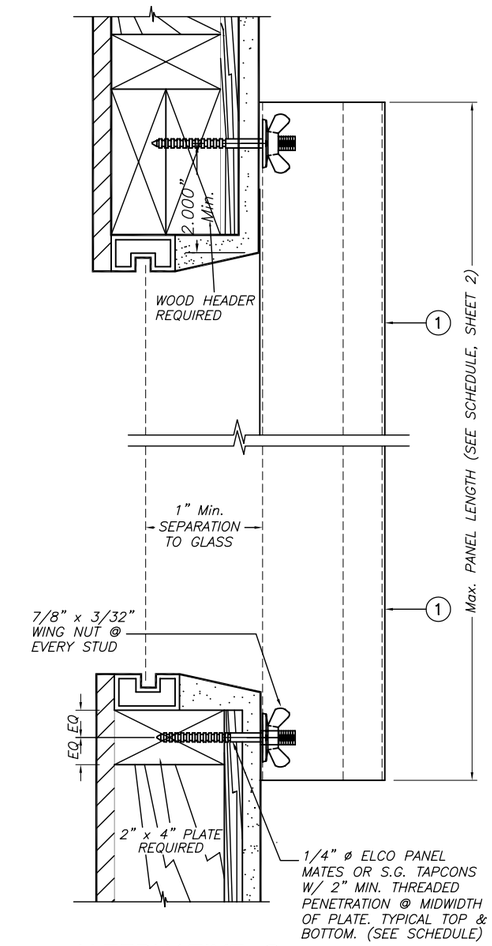

NOTES:

1. INSTALLATIONS ARE ONLY VALID FOR DESIGN WIND LOADS AND PANEL'S LENGTHS AS PER SCHEDULES ON SHEET 2 (EXCEPT AS NOTED)
2. SEE ANCHOR SCHEDULE ON SHEET 16 & 17.
3. FOR NEW WOOD FRAME CONSTRUCTION: WOOD MEMBERS TO BE SOUTHERN PINE No. 2, W/ SPECIFIC DENSITY OF 0.55 OR EQUAL.

NOTE FOR COMBINATION OF SECTIONS :

WALL/FLOOR/CEILING MOUNTING SECTIONS CAN BE COMBINED IN ANY WAY TO SUIT ANY INSTALLATION.

T.D.I. 2003

TILTECO INC.
TILLIT TESTING & ENGINEERING COMPANY
6355 N.W. 36th. St., Ste. 305, VIRGINIA GARDENS, Fl. 33166
Phone : (305)871−1530 . Fax : (305)871−1531
EB−0006719
WALTER A. TILLIT Jr., P. E.
FLORIDA Lic. 44167

0.050" BERTHA ALUMINUM STORM PANEL (2.00" DEEP)

EASTERN METAL SUPPLY, INC
9400 TELGE ROAD
HOUSTON,TX. 77095

REV. NO	DESCRIPTION	DATE	REV. No	DESCRIPTION	DATE
1	OLD DWG 05−175	6/26/06	3		
2			4		

L.G.
DRAWN BY:

6/26/06
DATE

06−171
DRAWING No

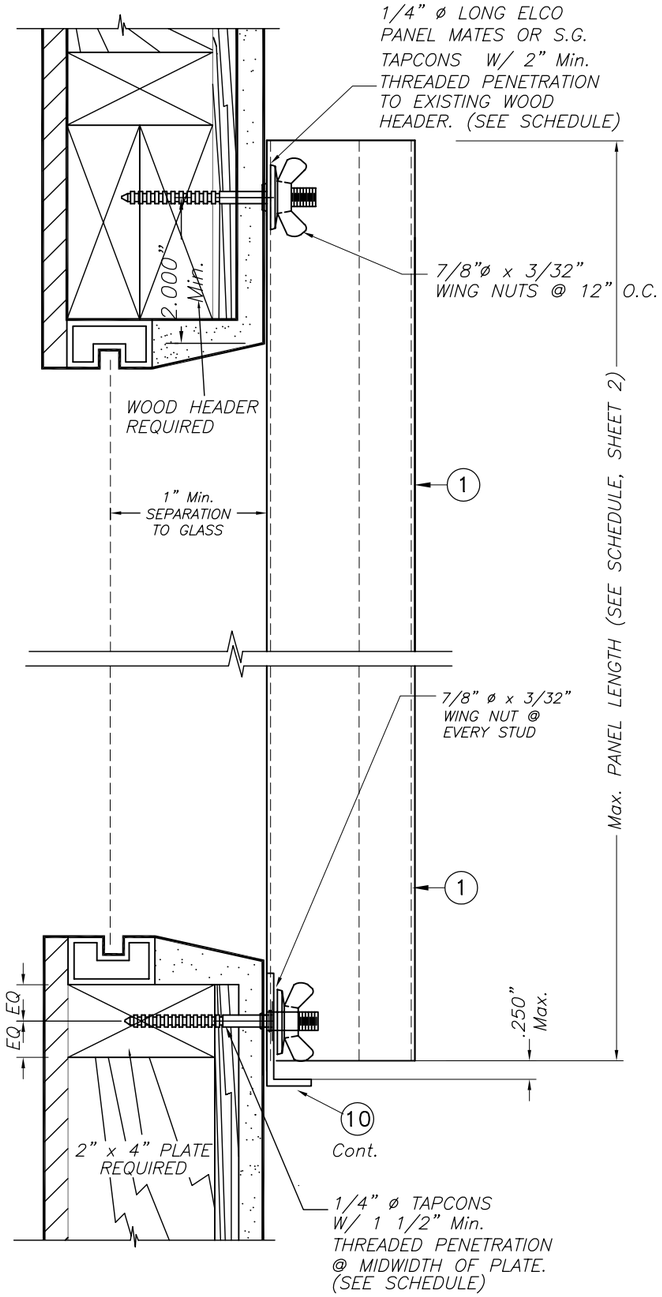

ALTERNATIVE 9

SCALE : 1/2" = 1"

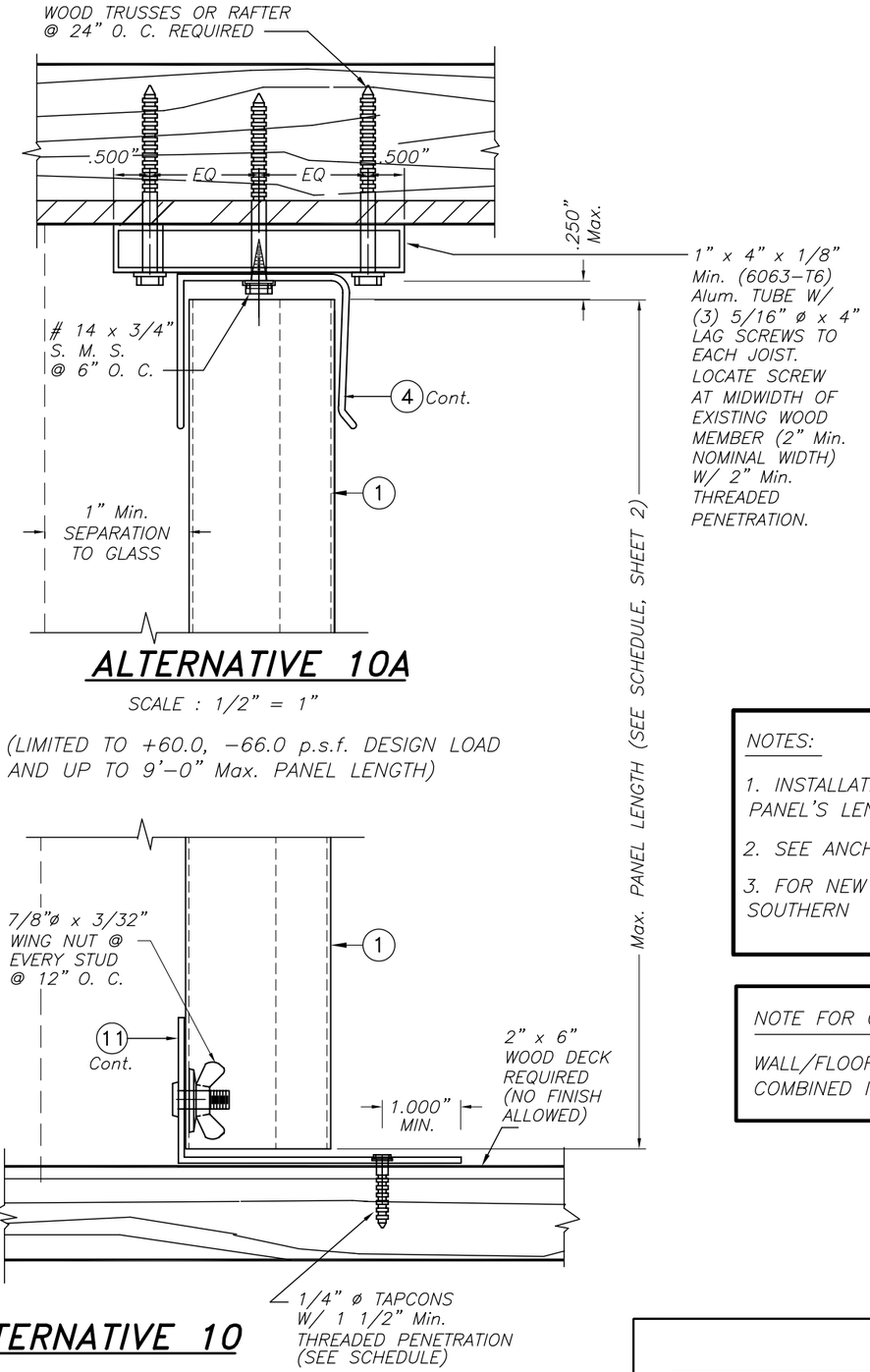

ALTERNATIVE 10A

SCALE : 1/2" = 1"

(LIMITED TO +60.0, −66.0 p.s.f. DESIGN LOAD AND UP TO 9'−0" Max. PANEL LENGTH)

ALTERNATIVE 10

SCALE : 1/2" = 1"

NOTES:

1. INSTALLATIONS ARE ONLY VALID FOR DESIGN WIND LOADS AND PANEL'S LENGTHS AS PER SCHEDULES ON SHEET 2 (EXCEPT AS NOTED)
2. SEE ANCHOR SCHEDULE ON SHEET 16 & 17.
3. FOR NEW WOOD FRAME CONSTRUCTION: WOOD MEMBERS TO BE SOUTHERN PINE No. 2, W/ SPECIFIC DENSITY OF 0.55 OR EQUAL.

NOTE FOR COMBINATION OF SECTIONS :

WALL/FLOOR/CEILING MOUNTING SECTIONS CAN BE COMBINED IN ANY WAY TO SUIT ANY INSTALLATION.

INSTALLATION DETAILS ON EXISTING WOOD BUILDINGS

T.D.I. 2003

TILTECO INC.
TILLIT TESTING & ENGINEERING COMPANY
6355 N.W. 36th. St., Ste. 305, VIRGINIA GARDENS, Fl. 33166
Phone : (305)871-1530 . Fax : (305)871-1531
EB-0006719
WALTER A. TILLIT Jr., P. E.
FLORIDA Lic. 44167

0.050" BERTHA ALUMINUM STORM PANEL (2.00" DEEP)

EASTERN METAL SUPPLY, INC
9400 TELGE ROAD
HOUSTON,TX. 77095

REV. NO	DESCRIPTION	DATE	REV. No	DESCRIPTION	DATE
1	OLD DWG 05-175	6/26/06	3		
2			4		

L.G.
DRAWN BY:

6/26/06
DATE

06-171
DRAWING No

SHEET 14 OF 17

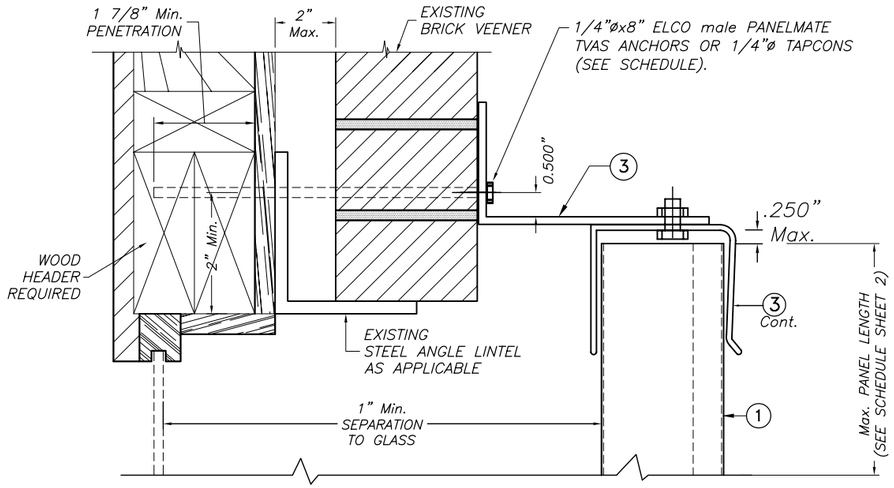

OPTION #1

ALTERNATIVE 11A

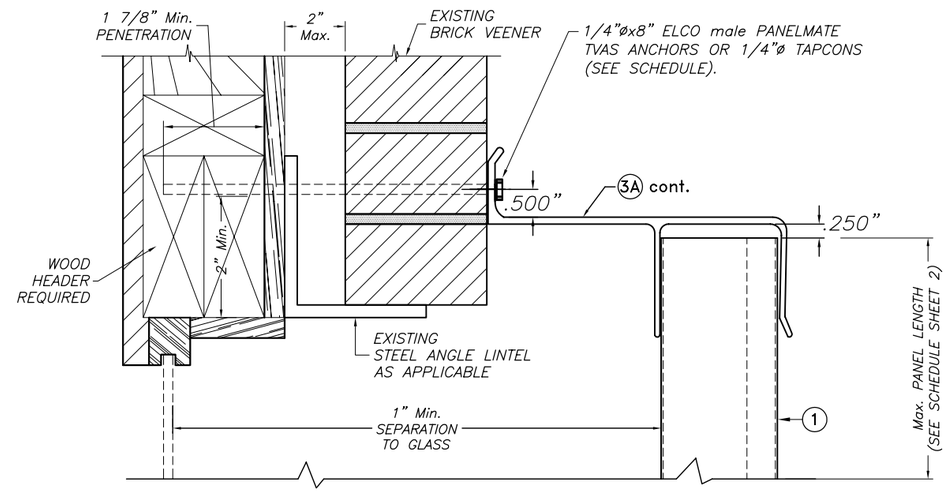

OPTION #2

ALTERNATIVE 11A

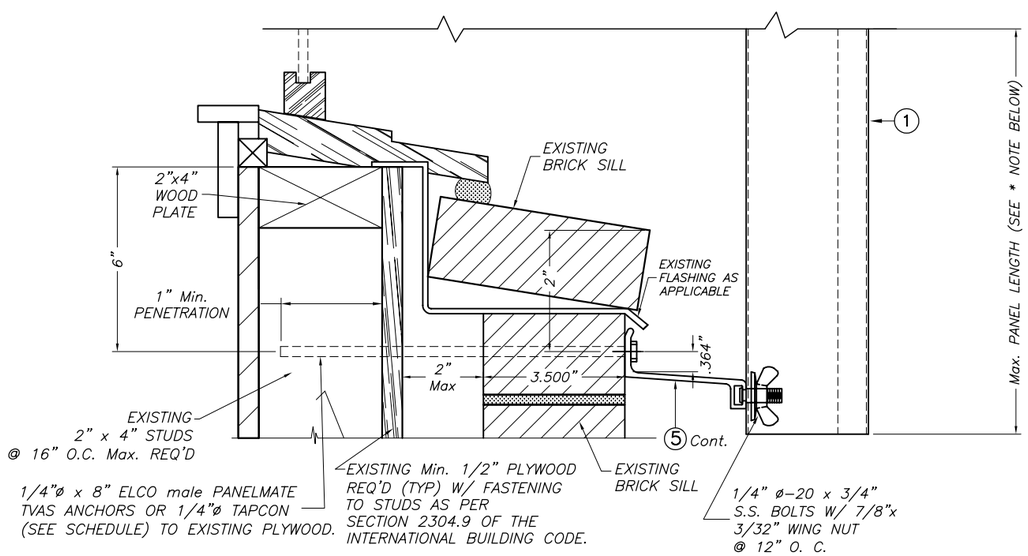

ALTERNATIVE 11

BUILD-OUT INSTALLATION

SCALE : 1/2" = 1"

* VALID FOR Max. +50.0, -60.0 p.s.f. DESIGN LOAD, FOR UP TO 78" PANELS LENGTHS, AND FOR +50.0, -50.0 p.s.f., FOR PANEL LENGTHS GREATER THAN 78" UP TO 108"

NOTES:

1. INSTALLATIONS ARE ONLY VALID FOR DESIGN WIND LOADS AND PANEL'S LENGTHS AS PER SCHEDULES ON SHEET 2 (EXCEPT AS NOTED)
2. SEE ANCHOR SCHEDULE ON SHEET 16 & 17.
3. FOR NEW WOOD FRAME CONSTRUCTION: WOOD MEMBERS TO BE SOUTHERN PINE No. 2, W/ SPECIFIC DENSITY OF 0.55 OR EQUAL.

NOTE FOR COMBINATION OF SECTIONS :

WALL/FLOOR/CEILING MOUNTING SECTIONS CAN BE COMBINED IN ANY WAY TO SUIT ANY INSTALLATION.

INSTALLATION DETAILS ON EXISTING WOOD BUILDINGS

T.D.I. 2003

TILLECO INC.
TILLIT TESTING & ENGINEERING COMPANY
6355 N.W. 36th. St., Ste. 305, VIRGINIA GARDENS, Fl. 33166
Phone : (305)871-1530 . Fax : (305)871-1531
EB-0006719
WALTER A. TILLIT Jr., P. E.
FLORIDA Lic. 44167

0.050" BERTHA ALUMINUM STORM PANEL (2.00" DEEP)

EASTERN METAL SUPPLY, INC
9400 TELGE ROAD
HOUSTON,TX. 77095

REV. NO	DESCRIPTION	DATE	REV. No	DESCRIPTION	DATE
1	OLD DWG 05-175	6/26/06	3		
2			4		

L.G.
DRAWN BY:

6/26/06
DATE

06-171
DRAWING No

SHEET 14A OF 17

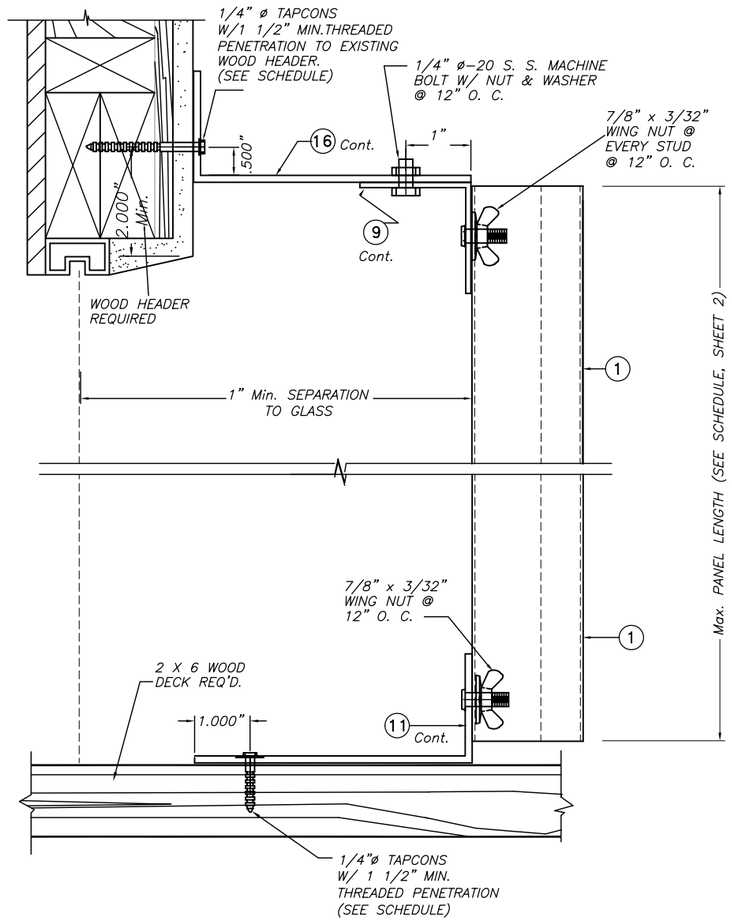

ALTERNATIVE 13

SCALE : 1/2" = 1"

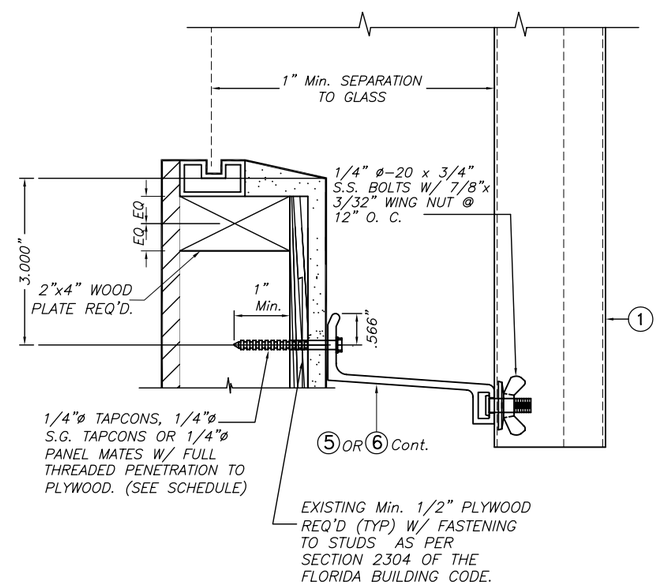

ALTERNATIVE 14

SCALE : 1/2" = 1"

* VALID FOR Max. +50.0, −60.0 p.s.f. DESIGN LOAD, FOR UP TO 78" PANELS LENGTHS, AND FOR +50.0, −50.0 p.s.f., FOR PANEL LENGTHS GREATER THAN 78" UP TO 108"

NOTES:

1. INSTALLATIONS ARE ONLY VALID FOR DESIGN WIND LOADS AND PANEL'S LENGTHS AS PER SCHEDULES ON SHEET 2
2. SEE ANCHOR SCHEDULE ON SHEET 16 & 17.
3. FOR NEW WOOD FRAME CONSTRUCTION: WOOD MEMBERS TO BE SOUTHERN PINE No. 2, W/ SPECIFIC DENSITY OF 0.55 OR EQUAL.

NOTE FOR COMBINATION OF SECTIONS :

WALL MOUNTING SECTIONS CAN BE COMBINED IN ANY WAY TO SUIT ANY INSTALLATION.

T.D.I. 2003

TILTECO INC.
TILLIT TESTING & ENGINEERING COMPANY
6355 N.W. 36th. St., Ste. 305, VIRGINIA GARDENS, Fl. 33166
Phone : (305)871-1530 . Fax : (305)871-1531
EB-0006719
WALTER A. TILLIT Jr., P. E.
FLORIDA Lic. 44167

0.050" BERTHA ALUMINUM STORM PANEL (2.00" DEEP)

EASTERN METAL SUPPLY, INC
9400 TELGE ROAD
HOUSTON,TX. 77095

REV. NO	DESCRIPTION	DATE	REV. No	DESCRIPTION	DATE
1	OLD DWG 05-175	6/26/06	3		
2			4		

L.G.
DRAWN BY:

6/26/06
DATE

06-171
DRAWING No

SHEET 15 OF 17

MAXIMUM DESIGN PRESSURE RATING "W" (p.s.f.) AND CORRESPONDING MAXIMUM ANCHOR SPACING SCHEDULE FOR INSTALLATIONS INTO WOOD FRAME BUILDINGS

MAXIMUM DESIGN LOAD W (p.s.f.)	WOOD FASTENERS			APPLICABLE TO ALTERNATIVES # & ANY COMBINATION OF THEM	MAXIMUM PANEL LENGTH "L" (ft.)
	REGULAR TAPCONS	S.G.TAPCON	PANELMATES OR PANELMATE TVAS		
+40.0, −40.0 OR LESS	12"	N/A	N/A	1 (TOP)	8'−0" OR LESS
	12"	N/A	N/A	1 (BOTTOM)	
	12"	N/A	N/A	2 (TOP)	
	9"	N/A	N/A	2 (BOTTOM)	
	9"	N/A	N/A	3A (TOP)	
	9"	N/A	N/A	3 (BOTTOM)	
	12"	N/A	N/A	4 (TOP)	
	12"	N/A	N/A	4 (BOTTOM)	
	9"	N/A	N/A	5A (TOP)	
	9"	N/A	N/A	5 (BOTTOM)	
	9"	N/A	N/A	6 (BOTTOM)	
	8 1/2"	N/A	N/A	7 (BOTTOM)	
	N/A	12"	12"	8 (TOP)	
	N/A	12"	12"	8 (BOTTOM)	
	N/A	12"	12"	9 (TOP)	
	12"	N/A	N/A	9 (BOTTOM)	
	6"	N/A	N/A	10 (BOTTOM)	
	9"	N/A	9"	11A (TOP)	
	4"	N/A	4"	11 (BOTTOM)	
	6"	N/A	N/A	13 (TOP)	
	6"	N/A	N/A	13 (BOTTOM)	
	4"	4"	4"	14 (BOTTOM)	

MAXIMUM DESIGN LOAD W (p.s.f.)	WOOD FASTENERS			APPLICABLE TO ALTERNATIVES # & ANY COMBINATION OF THEM	MAXIMUM PANEL LENGTH "L" (ft.)
	REGULAR TAPCONS	S.G.TAPCON	PANELMATES OR PANELMATE TVAS		
+40.0, −40.0 OR LESS	12"	N/A	N/A	1 (TOP)	>8'−0" UP TO 13'−0" *
	12"	N/A	N/A	1 (BOTTOM)	
	12"	N/A	N/A	2 (TOP)	
	9"	N/A	N/A	2 (BOTTOM)	
	9"	N/A	N/A	3A (TOP)	
	9"	N/A	N/A	3 (BOTTOM)	
	12"	N/A	N/A	4 (TOP)	
	12"	N/A	N/A	4 (BOTTOM)	
	9"	N/A	N/A	5A (TOP)	
	5 1/2"	N/A	N/A	5 (BOTTOM)	
	5 1/2"	N/A	N/A	6 (BOTTOM)	
	5 "	N/A	N/A	7 (BOTTOM)	
	N/A	12"	12"	8 (TOP) *	
	N/A	12" *	12" *	8 (BOTTOM) *	
	N/A	12" *	12" *	9 (TOP)	
	12"	N/A	N/A	9 (BOTTOM)	
	5 1/2"	N/A	N/A	10 (BOTTOM)	
	9"	N/A	9"	11A (TOP)	
	4" **	N/A	4" **	11 (BOTTOM) **	
	6"	N/A	N/A	13 (TOP)	
	5 1/2"	N/A	N/A	13 (BOTTOM)	
	4" **	4" **	4" **	14 (BOTTOM)**	

* USE 6" OC SPACING FOR PANEL LENGTHS LARGER THAN 10' − 0" AND USE 12" OC AS SHOWN ON SCHEDULE FOR PANELS LENGTHS EQUAL OR SHORTER THAN 10' − 0"

** VALID ONLY FOR UP TO 108" PANELS LENGTHS.

MAXIMUM DESIGN LOAD W (p.s.f.)	WOOD FASTENERS			APPLICABLE TO ALTERNATIVES # & ANY COMBINATION OF THEM	MAXIMUM PANEL LENGTH "L" (ft.)
	REGULAR TAPCONS	S.G.TAPCON	PANELMATES OR PANELMATE TVAS		
+40.0, −40.0 UP TO +60.0, −60.0	12"	N/A	N/A	1 (TOP)	8'−0" OR LESS
	12"	N/A	N/A	1 (BOTTOM)	
	12"	N/A	N/A	2 (TOP)	
	9"	N/A	N/A	2 (BOTTOM)	
	9"	N/A	N/A	3A (TOP)	
	9"	N/A	N/A	3 (BOTTOM)	
	12"	N/A	N/A	4 (TOP)	
	12"	N/A	N/A	4 (BOTTOM)	
	9"	N/A	N/A	5A (TOP)	
	8"	N/A	N/A	5 (BOTTOM)	
	8"	N/A	N/A	6 (BOTTOM)	
	5 1/2"	N/A	N/A	7 (BOTTOM)	
	N/A	12"	12"	8 (TOP)	
	N/A	12"	12"	8 (BOTTOM)	
	N/A	12"	12"	9 (TOP)	
	12"	N/A	N/A	9 (BOTTOM)	
	6"	N/A	N/A	10 (BOTTOM)	
	9"	N/A	9"	11A (TOP)	
	4" *	N/A	4" *	11 (BOTTOM) *	
	6"	N/A	N/A	13 (TOP)	
	6"	N/A	N/A	13 (BOTTOM)	
	4" *	4" *	4" *	14 (BOTTOM) *	

* VALID ONLY FOR UP TO +50.0, −60.0 p.s.f. DESIGN LOAD WITH 78" Max. PANEL LENGTHS OR FOR UP TO +50.0, −50.0 p.s.f. DESIGN LOAD WITH 96" Max. PANEL LENGTHS.

T.D.I. 2003

TILLECO INC.
TILLIT TESTING & ENGINEERING COMPANY
6355 N.W. 36th. St., Ste. 305, VIRGINIA GARDENS, Fl. 33166
Phone : (305)871−1530 . Fax : (305)871−1531
EB−0006719
WALTER A. TILLIT Jr., P. E.
FLORIDA Lic. 44167

0.050" BERTHA ALUMINUM STORM PANEL (2.00" DEEP)

EASTERN METAL SUPPLY, INC
9400 TELGE ROAD
HOUSTON,TX. 77095

REV. NO	DESCRIPTION	DATE	REV. No	DESCRIPTION	DATE
1	OLD DWG 05−175	6/26/06	3		
2			4		

L.G.
DRAWN BY:

6/26/06
DATE

06−171
DRAWING No

MAXIMUM DESIGN PRESSURE RATING "W" (p.s.f.) AND CORRESPONDING MAXIMUM ANCHOR SPACING SCHEDULE FOR INSTALLATIONS INTO WOOD FRAME BUILDINGS

MAXIMUM DESIGN LOAD W (p.s.f.)	WOOD FASTENERS			APPLICABLE TO ALTERNATIVES # & ANY COMBINATION OF THEM	MAXIMUM PANEL LENGTH "L" (ft.)
	REGULAR TAPCONS	S.G.TAPCON	PANELMATES OR PANELMATE TVAS		
+60.0, −60.0 UP TO +80.0, −90.0	11"	N/A	N/A	1 (TOP)	9'−0" OR LESS
	11"	N/A	N/A	1 (BOTTOM)	
	11"	N/A	N/A	2 (TOP)	
	9"	N/A	N/A	2 (BOTTOM)	
	9"	N/A	N/A	3A (TOP)	
	9"	N/A	N/A	3 (BOTTOM)	
	11"	N/A	N/A	4 (TOP)	
	11"	N/A	N/A	4 (BOTTOM)	
	9"	N/A	N/A	5A (TOP)	
	3 1/2"	N/A	N/A	5 (BOTTOM)	
	3 1/2"	N/A	N/A	6 (BOTTOM)	
	3 1/2"	N/A	N/A	7 (BOTTOM)	
	N/A	12"	6"	8 (TOP)	
	N/A	12"	6"	8 (BOTTOM)	
	N/A	12"	6"	9 (TOP)	
	11"	N/A	N/A	9 (BOTTOM)	
	3 1/2"	N/A	N/A	10 (BOTTOM)	
	9"	N/A	9"	11A (TOP)	
	N/A	N/A	N/A	11 (BOTTOM)	
	6"	N/A	N/A	13 (TOP)	
	3 1/2"	N/A	N/A	13 (BOTTOM)	
	N/A	N/A	N/A	14 (BOTTOM)	

MAXIMUM DESIGN LOAD W (p.s.f.)	WOOD FASTENERS			APPLICABLE TO ALTERNATIVES # & ANY COMBINATION OF THEM	MAXIMUM PANEL LENGTH "L" (ft.)
	REGULAR TAPCONS	S.G.TAPCON	PANELMATES OR PANELMATE TVAS		
+40.0, −40.0 UP TO +60.0, −60.0	12"	N/A	N/A	1 (TOP)	>8'−0" UP TO 12'−6"
	12"	N/A	N/A	1 (BOTTOM)	
	12"	N/A	N/A	2 (TOP)	
	12"	N/A	N/A	2 (BOTTOM)	
	12"	N/A	N/A	3A (TOP)	
	12"	N/A	N/A	3 (BOTTOM)	
	12"	N/A	N/A	4 (TOP)	
	12"	N/A	N/A	4 (BOTTOM)	
	12"	N/A	N/A	5A (TOP)	
	4"	N/A	N/A	5 (BOTTOM)	
	4"	N/A	N/A	6 (BOTTOM)	
	3 1/2"	N/A	N/A	7 (BOTTOM)	
	N/A	12" *	6" *	8 (TOP) *	
	N/A	12" *	6" *	8 (BOTTOM) *	
	N/A	12"	6"	9 (TOP)	
	12"	N/A	N/A	9 (BOTTOM)	
	4"	N/A	N/A	10 (BOTTOM)	
	12"	N/A	10 1/2"	11A (TOP)	
	4" **	N/A	4" **	11 (BOTTOM) **	
	12"	N/A	N/A	13 (TOP)	
	4"	N/A	N/A	13 (BOTTOM)	
	4" **	4" **	4" **	14 (BOTTOM) **	

MAXIMUM DESIGN LOAD W (p.s.f.)	WOOD FASTENERS			APPLICABLE TO ALTERNATIVES # & ANY COMBINATION OF THEM	MAXIMUM PANEL LENGTH "L" (ft.)
	REGULAR TAPCONS	S.G.TAPCON	PANELMATES OR PANELMATE TVAS		
+90.0, −90.0 UP TO +100.0, −130.0	8 1/2"	N/A	N/A	1 (TOP)	7'−0" OR LESS
	9"	N/A	N/A	1 (BOTTOM)	
	9"	N/A	N/A	2 (TOP)	
	9"	N/A	N/A	2 (BOTTOM)	
	8"	N/A	N/A	3A (TOP)	
	9"	N/A	N/A	3 (BOTTOM)	
	9"	N/A	N/A	4 (TOP)	
	9"	N/A	N/A	4 (BOTTOM)	
	8"	N/A	N/A	5A (TOP)	
	3"	N/A	N/A	5 (BOTTOM)	
	3"	N/A	N/A	6 (BOTTOM)	
	3"	N/A	N/A	7 (BOTTOM)	
	N/A	12"	6"	8 (TOP)	
	N/A	12"	6"	8 (BOTTOM)	
	N/A	12"	6"	9 (TOP)	
	9"	N/A	N/A	9 (BOTTOM)	
	3"	N/A	N/A	10 (BOTTOM)	
	5"	N/A	6"	11A (TOP)	
	N/A	N/A	N/A	11 (BOTTOM)	
	6"	N/A	N/A	13 (TOP)	
	3"	N/A	N/A	13 (BOTTOM)	
	N/A	N/A	N/A	14 (BOTTOM)	

* USE 6" OC SPACING FOR PANEL LENGTHS LARGER THAN 10' − 0" AND USE 12" OC AS SHOWN ON SCHEDULE FOR PANELS LENGTHS EQUAL OR SHORTER THAN 10' − 0"

** VALID ONLY FOR UP TO +50.0, −50.0 p.s.f. DESIGN LOAD WITH 108" Max. PANEL LENGTHS.

T.D.I. 2003

TILTECO INC.
TILLIT TESTING & ENGINEERING COMPANY
6355 N.W. 36th. St., Ste. 305, VIRGINIA GARDENS, Fl. 33166
Phone : (305)871−1530 . Fax : (305)871−1531
EB−0006719
WALTER A. TILLIT Jr., P. E.
FLORIDA Lic. 44167

0.050" BERTHA ALUMINUM STORM PANEL (2.00" DEEP)

EASTERN METAL SUPPLY, INC
9400 TELGE ROAD
HOUSTON,TX. 77095

REV. NO	DESCRIPTION	DATE	REV. No	DESCRIPTION	DATE
1	OLD DWG 05−175	6/26/06	3		
2			4		

L.G.
DRAWN BY:

6/26/06
DATE

06−171
DRAWING No

SHEET 17 OF 17