GENERAL NOTES:

1. 0.050" SOLID BERTHA ALUMINUM STORM PANEL SHOWN ON THIS PRODUCT EVALUATION DOCUMENT (P. E. D.) HAS BEEN VERIFIED FOR COMPLIANCE IN ACCORDANCE WITH THE 2003 EDITIONS OF THE INTERNATIONAL BUILDING CODE, (I.B.C.) AND INTERNATIONAL RESIDENTIAL CODE, (I.R.C.) WITH THE 2003 TEXAS REVISIONS, EFFECTIVE JANUARY 1, 2005.
0.050" SOLID BERTHA ALUMINUM STORM PANEL SHALL BE INSTALLED AT SEAWARD AND INLAND AREAS, AS DEFINED BY THE TEXAS DEPARTMENT OF INSURANCE.
DESIGN WIND LOADS SHALL BE DETERMINED AS PER SECTION 1609 OF THE INTERNATIONAL BUILDING CODE, FOR A BASIC WIND SPEED AS REQUIRED BY THE JURISDICTION WHERE SHUTTER WILL BE INSTALLED, AND FOR A DIRECTIONALITY FACTOR Kd=1.13, IN ACCORDANCE W/ ASCE 7–02 STANDARD AND SECTION 1605.3.2 OF THE I.B.C.
0.050" SOLID BERTHA ALUMINUM STORM PANEL ADEQUACY FOR IMPACT AND CYCLIC RESISTANCE HAS BEEN VERIFIED IN ACCORDANCE WITH SECTIONS 1609.1.4 AND R301.2.1.2 OF THE ABOVE MENTIONED CODES, RESPECTIVELY, AS PER AMERICAN TEST LAB REPORTS # 1022.01–96 AND # 0221.01–01, PER FLORIDA BUILDING CODE PROTOCOLS TAS–201, TAS–202 AND TAS–203.

2. ALL ALUMINUM SHEET METAL PANELS SHALL HAVE 5052–H32 ALLOY OR 3004–H34 ALLOY.

3. ALL ALUMINUM EXTRUSIONS SHALL BE ALUMINUM ASSOCIATION 6063–T6 ALLOY AND TEMPER, WITH Fy = 25.0 ksi MINIMUM (UNLESS OTHERWISE NOTED). THE THICKNESS OF ALL EXTRUSIONS SHALL BE AS SHOWN ON THIS DRAWING WITH STANDARD TOLERANCES IN ACCORDANCE WITH THE "ALUMINUM STANDARDS AND DATA 2003 EDITION", ALUMINUM ASSOCIATION INCORPORATED, WASHINGTON D.C.

4. ALL SCREWS & BOLTS INSTALLED AT SEAWARD AREAS TO BE STAINLESS STEEL 304 OR 316 AISI SERIES AND MEET ASTM A167, OR HOT DIPPED GALVANIZED (AFTER FABRICATION) CARBON STEEL AS PER ASTM A123 OR ASTM A153, OR HOT DIPPED GALVANIZED OR GALVANNEALED (PRIOR TO FABRICATION) AND MEET ASTM A653 WITH 50 ksi YIELD STRENGTH AND 90 ksi TENSILE STRENGTH, PER 2003 TEXAS REVISIONS TO SECTION 1716.1.1 OF THE 2003 I.B.C. AND SECTION R324.1.1 OF THE 2003 I.R.C.

5. ALL SCREWS & BOLTS INSTALLED AT INLAND I AREAS TO BE STAINLESS STEEL 304 OR 316 AISI SERIES AND MEET ASTM A167, OR HOT DIPPED GALVANIZED (AFTER FABRICATION) CARBON STEEL AS PER ASTM A123 OR ASTM A153, OR HOT DIPPED GALVANIZED OR GALVANNEALED (PRIOR TO FABRICATION) AND MEET ASTM A653; HOT DIP GALVANIZED OR ELECTRO GALVANIZED PER ASTM A641, MECHANICALLY DEPOSITED ZINC COATINGS PER ASTM B695 OR ELECTRO DEPOSITED ZINC COATINGS PER ASTM B633, PER THE 2003 TEXAS REVISIONS TO SECTION 1716.1.2 OF THE 2003 I.B.C. AND TO SECTION R324.1.2 OF THE 2003 I.R.C.

6. ANCHORS TO WALL SHALL BE AS FOLLOWS: (UNLESS OTHERWISE NOTED)

(A) TO EXISTING POURED CONCRETE:

–1/4"ø TAPCON ANCHORS AS MANUFACTURED BY I.T.W./BUILDEX (REGULAR OR 410 S.S.) AND ELCO TEXTRON (REGULAR).
–1/4"ø CRETE–FLEX SS4 ANCHORS AS MANUFACTURED BY ELCO TEXTRON.
–1/4"ø CF TAP–GRIP ANCHORS (BERTHA STUD–CON), AS MANUFACTURED BY TRU–FAST CORPORATION.
–1/4"ø ZAMAC NAILIN ANCHORS AS MANUFACTURED BY THE POWER FASTENERS, INC.
–1/4"ø x 7/8" CALK–IN ANCHORS, 1/4"ø ELCO male & female "PANELMATE" OR 1/4"ø ELCO male "PANELMATE PLUS" AS MANUFACTURED BY THE POWER FASTENERS, INC. AND ELCO TEXTRON, RESPECTIVELY.

NOTES:
A.1) MINIMUM EMBEDMENT INTO POURED CONCRETE OF TAPCON ANCHORS OR CRETEFLEX SS4 IS 1 3/4"; FOR ZAMAC NAILIN IS 1 3/8"; FOR CF TAP–GRIP ANCHORS IS 1 1/4"; FOR ELCO PANELMATE AND ELCO male "PANELMATE PLUS" IS 2".

A.2) 7/8"ø CALK–IN ANCHORS SHALL BE ENTIRELY EMBEDDED INTO THE POURED CONCRETE. NO EMBEDMENT INTO STUCCO SHALL BE PERMITTED.
–1/4"ø–20 SCREWS USED SHALL BE 1 1/2" LONG MINIMUM SHOULD STUCCO EXIST, AND 1" MINIMUM FOR WALLS WITH NO STUCCO.

A.3) IN CASE THAT PRECAST STONE, PRECAST CONCRETE PANELS, OR PAVERS BE FOUND ON THE EXISTING WALL OR FLOOR, ANCHORS SHALL BE LONG ENOUGH TO REACH THE MAIN STRUCTURE BEHIND SUCH PANELS, ANCHORAGE SHALL BE AS INDICATED ON NOTES A.1) & A.2) ABOVE.

(B) TO EXISTING CONCRETE BLOCK WALL:

–1/4"ø TAPCON ANCHORS AS MANUFACTURED BY I.T.W./BUILDEX (REGULAR OR 410 S.S.) AND ELCO TEXTRON (REGULAR).
–1/4"ø CRETE–FLEX SS4 ANCHORS AS MANUFACTURED BY ELCO TEXTRON.
–1/4"ø CF TAP–GRIP ANCHORS (BERTHA STUD–CON), AS MANUFACTURED BY TRU–FAST CORPORATION.
–1/4"ø ZAMAC NAILIN ANCHORS AS MANUFACTURED BY THE POWER FASTENERS, INC.
–1/4"ø x 7/8" CALK–IN ANCHORS, 1/4"ø ELCO male & female "PANELMATE" OR 1/4"ø ELCO male "PANELMATE PLUS" AS MANUFACTURED BY THE POWER FASTENERS, INC. AND ELCO TEXTRON, RESPECTIVELY.

NOTES:
B.1) MINIMUM EMBEDMENT OF TAPCON ANCHORS, ZAMAC NAILIN, CF TAPGRIP, ELCO PANELMATE, ELCO male "PANELMATE PLUS" AND CRETE–FLEX SS4, INTO THE CONCRETE BLOCK UNIT SHALL BE 1 1/4".

B.2) –7/8"ø CALK–IN ANCHORS SHALL BE ENTERILY EMBEDDED INTO THE CONCRETE BLOCK UNIT.
NO EMBEDMENT INTO STUCCO SHALL BE PERMITTED.
–1/4"ø–20 SCREWS USED SHALL BE 1 1/2" LONG MINIMUM SHOULD STUCCO EXIST, AND 1" MINIMUM FOR WALLS WITH NO STUCCO.

B.3) IN CASE THAT PRECAST STONE OR PRECAST CONCRETE PANELS BE FOUND ON THE EXISTING WALL, ANCHORS SHALL BE LONG ENOUGH TO REACH THE MAIN STRUCTURE BEHIND SUCH PANELS. ANCHORAGE SHALL BE AS INDICATED ON NOTES IN B.1) & B.2) ABOVE.

(C) TO EXISTING WOOD FRAME BUILDINGS, SEE SPECIFICATIONS ON SHEETS 12, 13, 14 & 15 OF 15. ANCHORAGE SHALL BE PERFORMED BEYOND ANY FINISH MATERIAL AT WALL LIKE BRICK VENEER, STUCCO OR ANY OTHER FINISH.

(D) ANCHORS SHALL BE INSTALLED FOLLOWING ALL OF THE RECOMMENDATIONS AND SPECIFICATIONS OF THE ANCHOR'S MANUFACTURER.

7. PANELS MAY ALSO BE INSTALLED HORIZONTALLY FOLLOWING INSTALLATION DETAILS SHOWN ON SECTIONS 1 THRU 16 (SHEET 3 THRU 7 OF 15) EXCEPT THAT HEADERS 2, 3 & 4 SHALL NOT BE USED.

8. IT SHALL BE THE RESPONSIBILITY OF THE CONTRACTOR TO VERIFY THE SOUNDNESS OF THE STRUCTURE WHERE SHUTTER IS TO BE ATTACHED TO INSURE PROPER ANCHORAGE. CONTRACTOR TO SEAL/CAULK ALL SHUTTER COMPONENT EDGES WHICH REMAIN IN CONTINUOUS CONTACT WITH THE BUILDING DUE TO THEIR FASTENING TO IT, TO PREVENT WIND/RAIN INTRUSION. CAULK AND SEAL SHUTTER TRACKS ALL AROUND FULL LENGTH.

9. 0.050" SOLID BERTHA ALUMINUM STORM PANEL SHALL COMPLY WITH SPECIFICATIONS INDICATED IN THIS DRAWING PLUS ANY BUILDING AND ZONING REGULATIONS PROVIDED BY THE JURISDICTION WHERE PERMIT IS APPLIED TO.

10. (a) THIS PRODUCT EVALUATION DOCUMENT (P. E. D.) PREPARED BY THIS ENGINEER IS GENERIC AND DOES NOT PROVIDE INFORMATION FOR A SITE SPECIFIC PROJECT; i. e. WHERE THE SITE CONDITIONS DEVIATE FROM THE P. E. D.

(b) CONTRACTOR TO BE RESPONSIBLE FOR THE SELECTION, PURCHASE AND INSTALLATION INCLUDING LIFE SAFETY OF THIS PRODUCT, BASED ON THIS PRODUCT EVALUATION DOCUMENT, PROVIDED HE/SHE DOES NOT DEVIATE FROM THE CONDITIONS DETAILED ON THIS DOCUMENT. CONSTRUCTION SAFETY AT SITE IS THE CONTRACTOR'S RESPONSIBILITY.

(c) THIS PRODUCT EVALUATION DOCUMENT WILL BE CONSIDERED INVALID IF ALTERED BY ANY MEANS.

(d) SITE SPECIFIC PROJECTS SHALL BE PREPARED BY A REGISTERED ENGINEER OR ARCHITECT WHICH WILL BECOME THE ENGINEER OF RECORD (E.O.R.) FOR THE PROJECT AND WHO WILL BE RESPONSIBLE FOR THE PROPER USE OF THE P.E.D. ENGINEER OF RECORD, ACTING AS A DELEGATED ENGINEER TO THE P.E.D. ENGINEER, SHALL SUBMIT TO THIS LATTER THE SITE SPECIFIC DRAWINGS FOR REVIEW.

(e) THIS P.E.D. SHALL BEAR THE DATE AND ORIGINAL SEAL AND SIGNATURE OF THE PROFESSIONAL ENGINEER OF RECORD THAT PREPARED IT.

T.D.I.–2003

TILTECO INC.
TILLIT TESTING & ENGINEERING COMPANY
6595 N.W. 36th. St., Ste. 217, VIRGINIA GARDENS, Fl. 33166
Phone : (305)871–1530 . Fax : (305)871–1531
EB–0006719
WALTER A. TILLIT Jr. P. E.
FLORIDA Lic. # 44167

0.050" SOLID BERTHA ALUMINUM STORM PANEL (2.25" DEEP)

EASTERN METAL SUPPLY, INC
9400 TELGE ROAD
HOUSTON, TEXAS 77095

REV. No	DESCRIPTION	DATE	REV. No	DESCRIPTION	DATE
1	GENERAL NOTE # 2	1/28/05	3		
2			4		

AS SHOWN
SCALE

1/17/05
DATE

05–012
DRAWING No

SHEET 1 OF 15

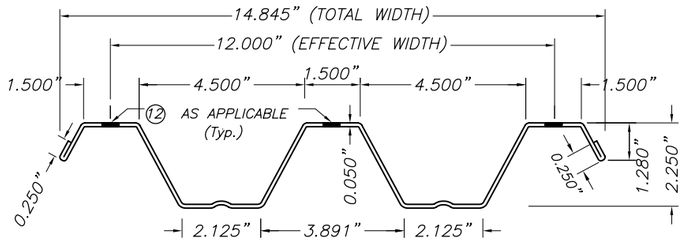

FULL PANEL W/ HEMMED EDGES

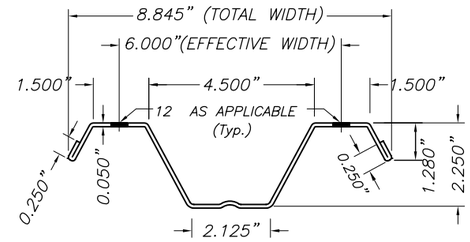

HALF PANEL W/ HEMMED EDGES

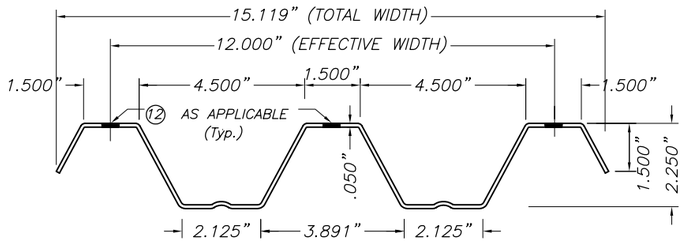

OPTIONAL FULL PANEL W/O HEMMED EDGES

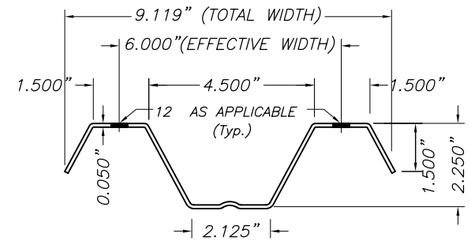

OPTIONAL HALF PANEL W/O HEMMED EDGES

1 SOLID STORM PANEL

SCALE : 1/4" = 1"

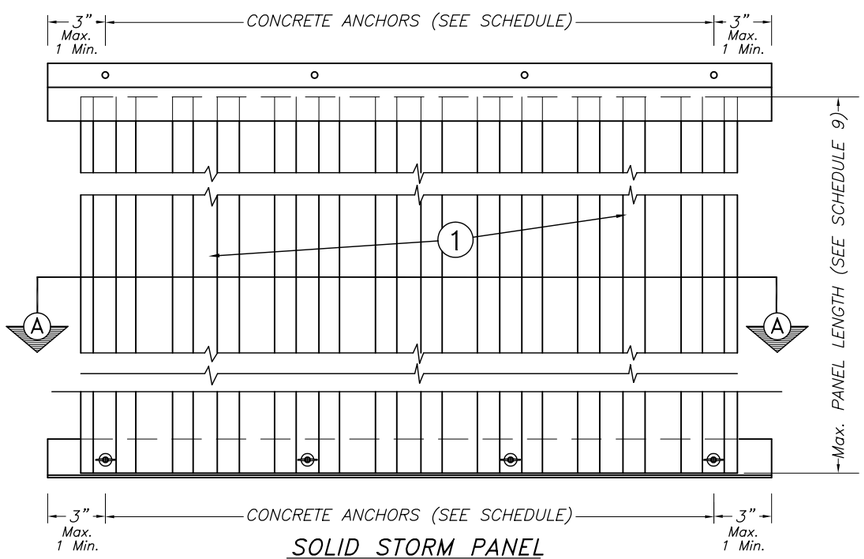

SOLID STORM PANEL
TYPICAL ELEVATION

N. T. S.

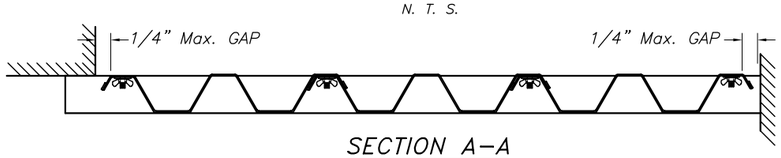

SECTION A–A

N. T. S.

T.D.I.–2003

TILLECO INC.
TILLIT TESTING & ENGINEERING COMPANY
6595 N.W. 36th. St., Ste. 217, VIRGINIA GARDENS, Fl. 33166
Phone : (305)871–1530 . Fax : (305)871–1531
EB–0006719
WALTER A. TILLIT Jr. P. E.
FLORIDA Lic. # 44167

0.050" SOLID BERTHA ALUMINUM STORM PANEL (2.25" DEEP)

EASTERN METAL SUPPLY, INC
9400 TELGE ROAD
HOUSTON, TEXAS 77095

REV. No	DESCRIPTION	DATE	REV. No	DESCRIPTION	DATE
1	PANEL LIP	8/21/07	3		
2			4		

AS SHOWN
SCALE

1/17/05
DATE

05–012
DRAWING No

SHEET 1A OF 15

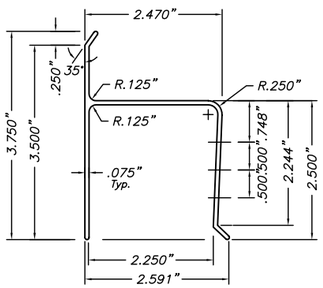

② "h" HEADER

SCALE : 3/8" = 1"

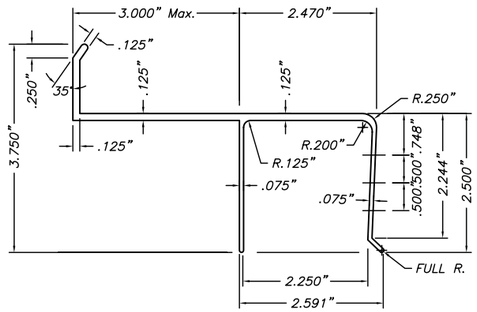

③ 3" Max. "U" BUILD OUT

SCALE : 3/8" = 1"

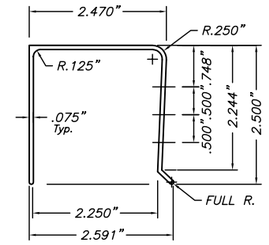

④ "U" HEADER

SCALE : 3/8" = 1"

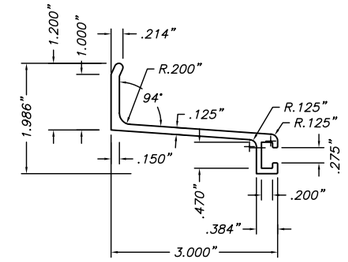

⑤ 3" ANGLE BUILD OUT BRACKET

SCALE : 3/8" = 1"

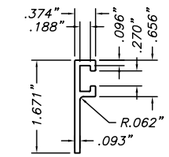

⑥ "F" TRACK

SCALE : 3/8" = 1"

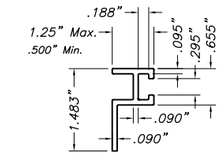

⑥A 1 1/4" MAX. B. O. "F" TRACK

SCALE : 3/8" = 1"

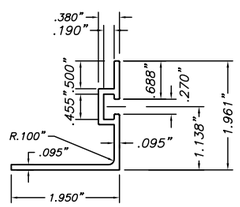

⑦ REVERSED "F" ANGLE TRACK

SCALE : 3/8" = 1"

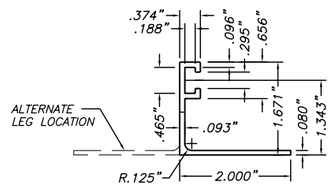

⑧ "F" TRACK ANGLE

SCALE : 3/8" = 1"

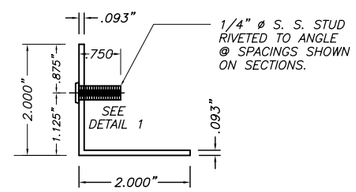

⑨ STUDDED ANGLE

6063-T5 Alum. ALLOY
SCALE : 3/8" = 1"

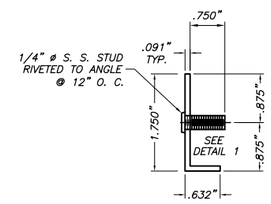

⑨A MINI WALL 1.75"x0.632" ANGLE WITH STUD

SCALE: 1/2" = 1"

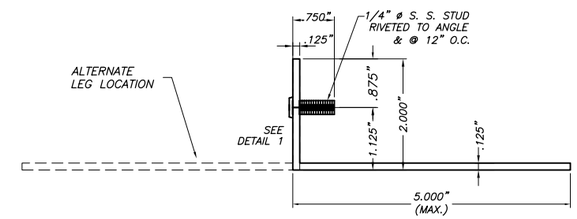

⑩ 2"x5"(MAX.)x1/8" ANGLE WITH STUD

SCALE: 3/8" = 1"

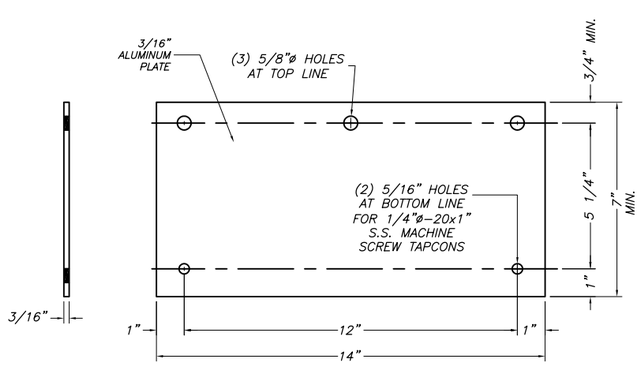

⑪ 3/16"x7"x14" LONG WALL PLATE

SCALE: 3/16" = 1"

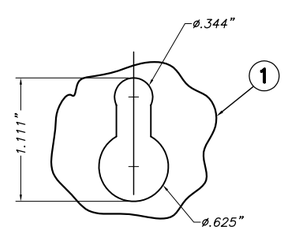

⑫ KEY HOLE AT PANEL

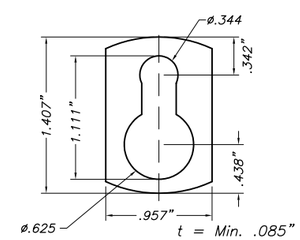

⑬ KEY HOLE WASHER

3105-H154 Alum. ALLOY
SCALE : 3/4" = 1"

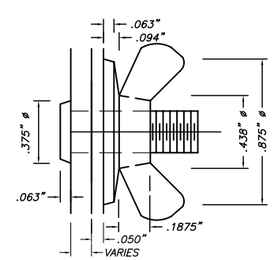

DETAIL 1: STUD W/ WING NUT

COMPONENTS

T.D.I.-2003

TILLECO INC.
TILLIT TESTING & ENGINEERING COMPANY
6595 N.W. 36th. St., Ste. 217, VIRGINIA GARDENS, Fl. 33166
Phone : (305)871-1530 Fax : (305)871-1531
EB-0006719
WALTER A. TILLIT Jr. P. E.
FLORIDA Lic. # 44167

0.050" SOLID BERTHA ALUMINUM STORM PANEL (2.25" DEEP)

EASTERN METAL SUPPLY, INC
9400 TELGE ROAD
HOUSTON, TEXAS 77095

REV. No	DESCRIPTION	DATE	REV. No	DESCRIPTION	DATE
1			3		
2			4		

AS SHOWN
SCALE

1/17/05
DATE

05-012
DRAWING No

SHEET 2 OF 15

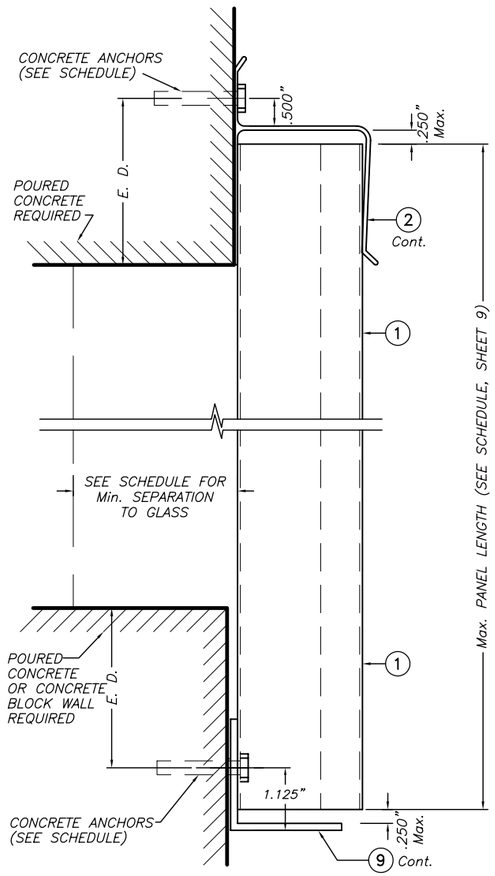

SECTION @ ANCHOR

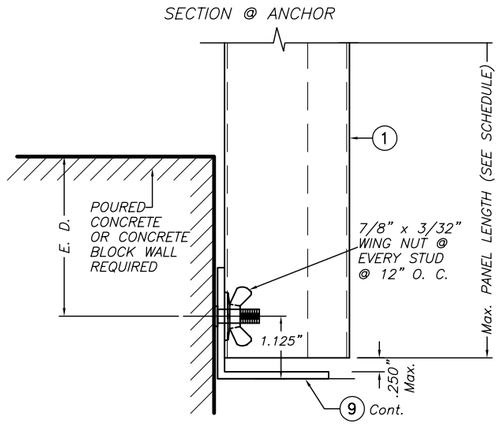

SECTION @ STUD

WALL MOUNTING INSTALLATION SECTION 1

SCALE : 3/8" = 1"

NOTE : DETAIL OF SECTION @ STUD VALID ALSO FOR WALL MOUNTING INSTALLATION – SECTION 2 (TOP)

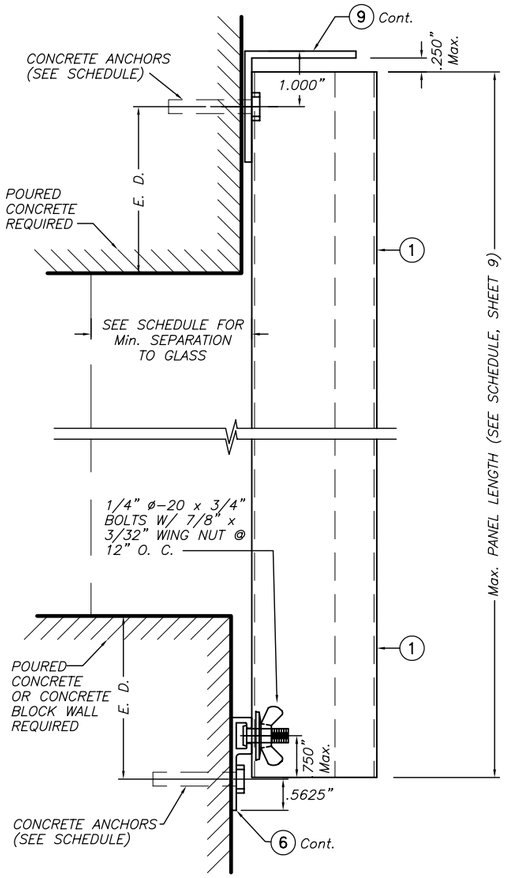

WALL MOUNTING INSTALLATION SECTION 2

SCALE : 3/8" = 1"

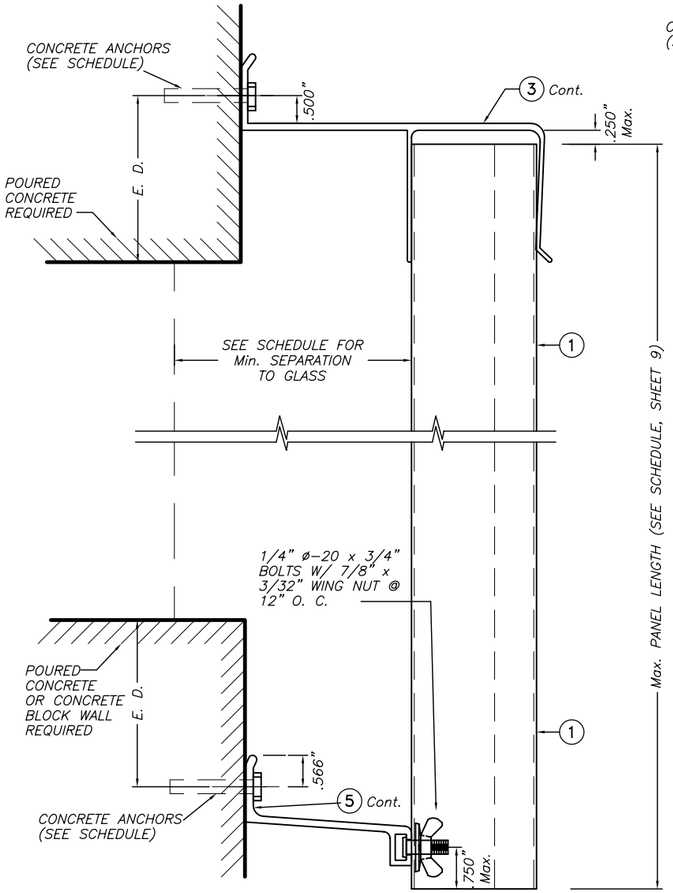

BUILD OUT INSTALLATION SECTION 3

SCALE : 3/8" = 1"

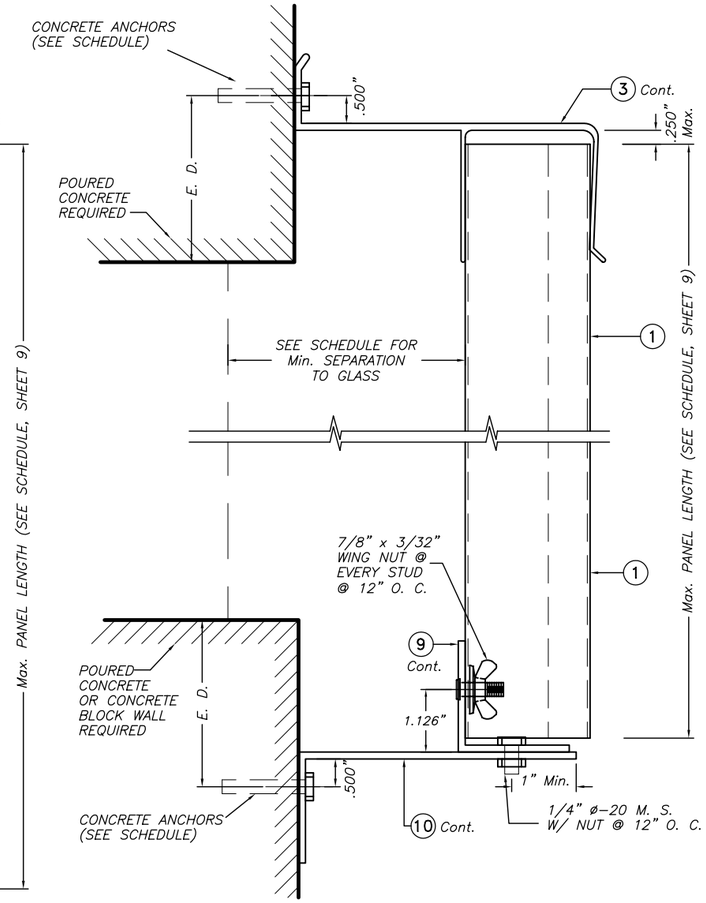

BUILD OUT INSTALLATION SECTION 4

SCALE : 3/8" = 1"

E. D. = EDGE DISTANCE (SEE SCHEDULE ON SHEETS 10 & 11 OF 15)

NOTE FOR COMBINATION OF SECTIONS :

WALL MOUNTING SECTIONS CAN BE COMBINED IN ANY WAY TO SUIT ANY INSTALLATION.

T.D.I.–2003

TILTECO INC.
TILLIT TESTING & ENGINEERING COMPANY
6595 N.W. 36th. St., Ste. 217, VIRGINIA GARDENS, Fl. 33166
Phone : (305)871–1530 . Fax : (305)871–1531
EB–0006719
WALTER A. TILLIT Jr. P. E.
FLORIDA Lic. # 44167

0.050" SOLID BERTHA ALUMINUM STORM PANEL (2.25" DEEP)

EASTERN METAL SUPPLY, INC
9400 TELGE ROAD
HOUSTON, TEXAS 77095

REV. No	DESCRIPTION	DATE	REV. No	DESCRIPTION	DATE
1			3		
2			4		

AS SHOWN
SCALE

1/17/05
DATE

05–012
DRAWING No

SHEET 3 OF 15

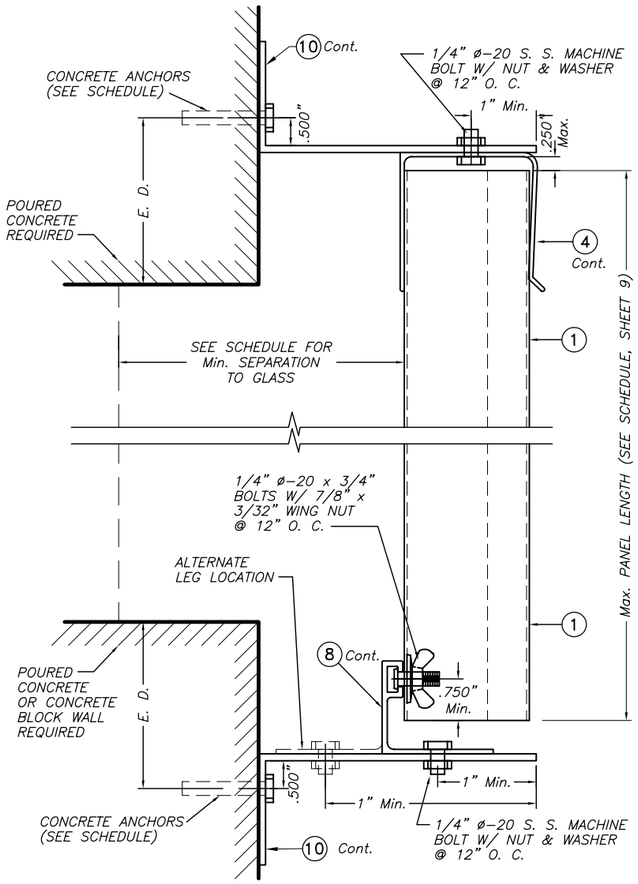

BUILD OUT INSTALLATION – SECTION 5

SCALE : 3/8" = 1"

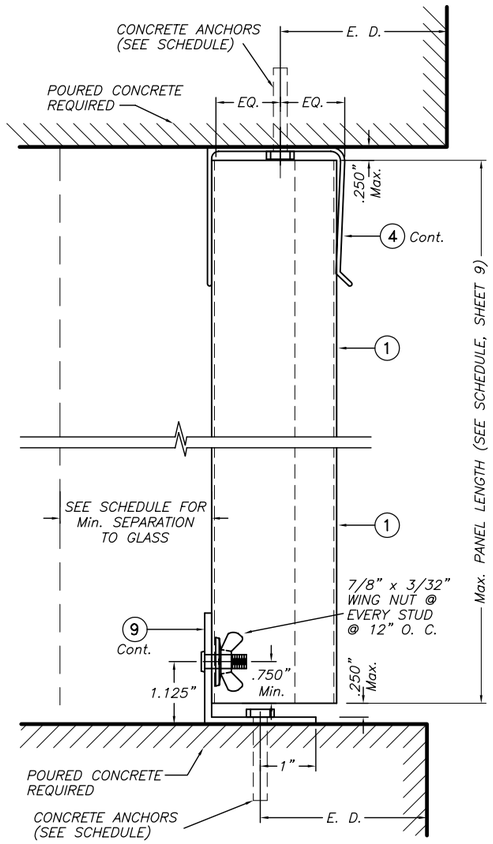

CEILING & FLOOR MOUNTING INSTALLATION – SECTION 6

SCALE : 3/8" = 1"

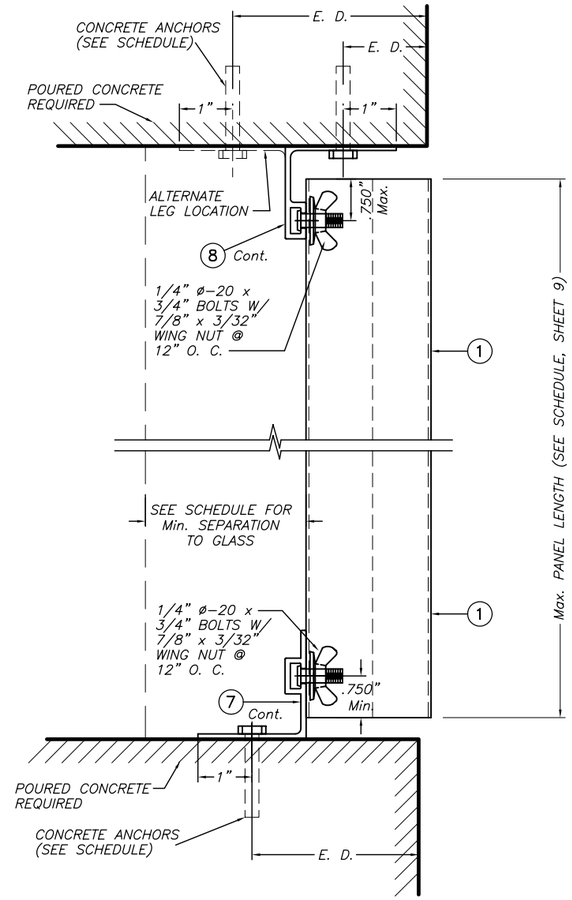

CEILING & FLOOR MOUNTING INSTALLATION – SECTION 7

SCALE : 3/8" = 1"

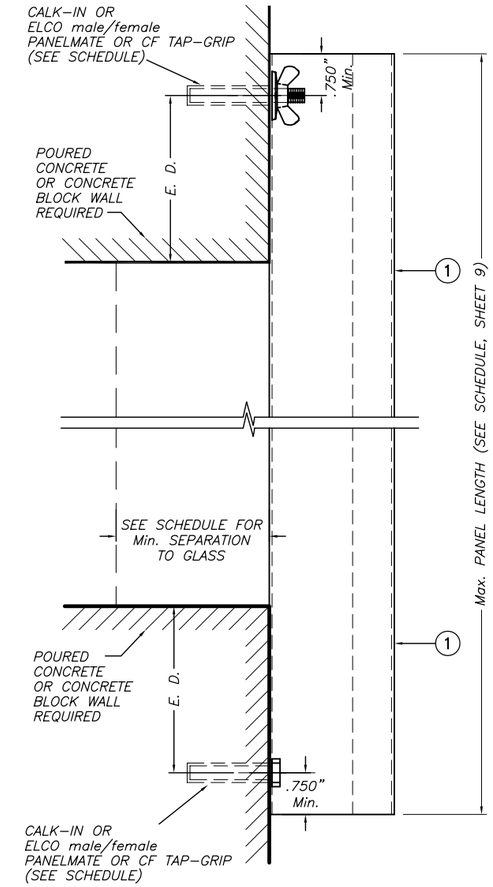

WALL MOUNTING INSTALLATION (D. M.) – SECTION 8

SCALE : 3/8" = 1"

E. D. = EDGE DISTANCE (SEE SCHEDULE ON SHEETS 10 & 11 OF 15)

NOTE FOR COMBINATION OF SECTIONS :

WALL/FLOOR/CEILING MOUNTING SECTIONS CAN BE COMBINED IN ANY WAY TO SUIT ANY INSTALLATION.

T.D.I.-2003

TILLECO INC.
TILLIT TESTING & ENGINEERING COMPANY
6595 N.W. 36th. St., Ste. 217, VIRGINIA GARDENS, Fl. 33166
Phone : (305)871-1530 Fax : (305)871-1531
EB-0006719
WALTER A. TILLIT Jr. P. E.
FLORIDA Lic. # 44167

0.050" SOLID BERTHA ALUMINUM STORM PANEL (2.25" DEEP)

EASTERN METAL SUPPLY, INC
9400 TELGE ROAD
HOUSTON, TEXAS 77095

REV. No	DESCRIPTION	DATE	REV. No	DESCRIPTION	DATE
1			3		
2			4		

AS SHOWN
SCALE

1/17/05
DATE

05-012
DRAWING No

SHEET 4 OF 15

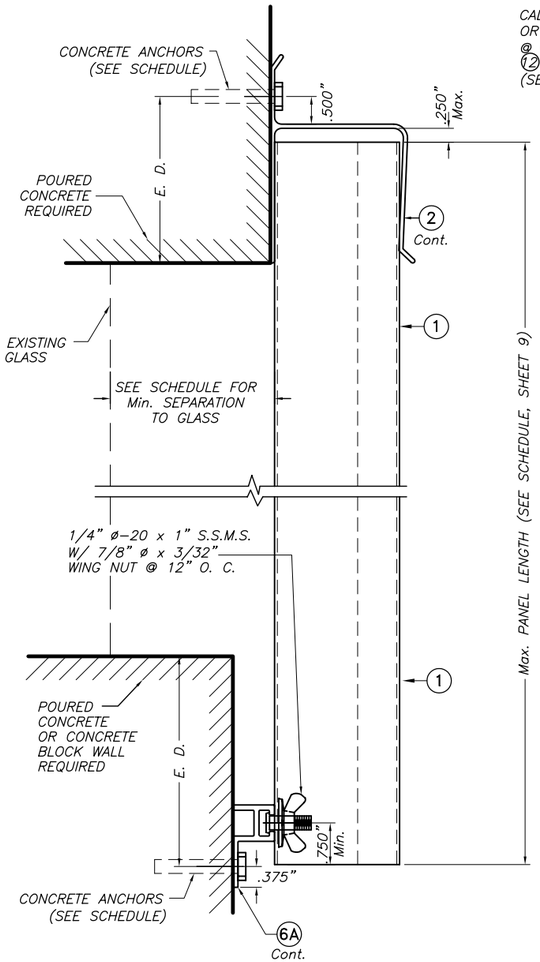

WALL MOUNTING INSTALLATION SECTION 9

SCALE : 3/8" = 1"

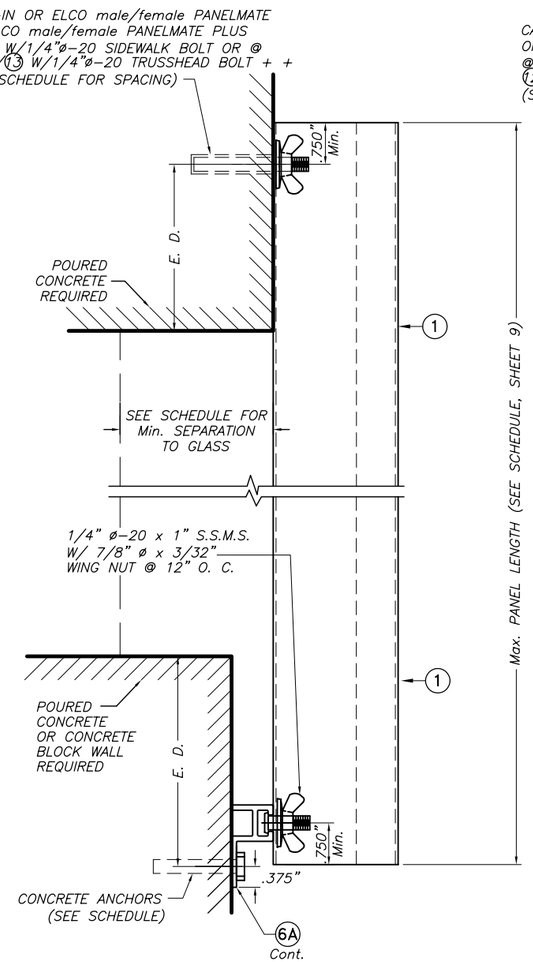

WALL MOUNTING INSTALLATION SECTION 10

SCALE : 3/8" = 1"

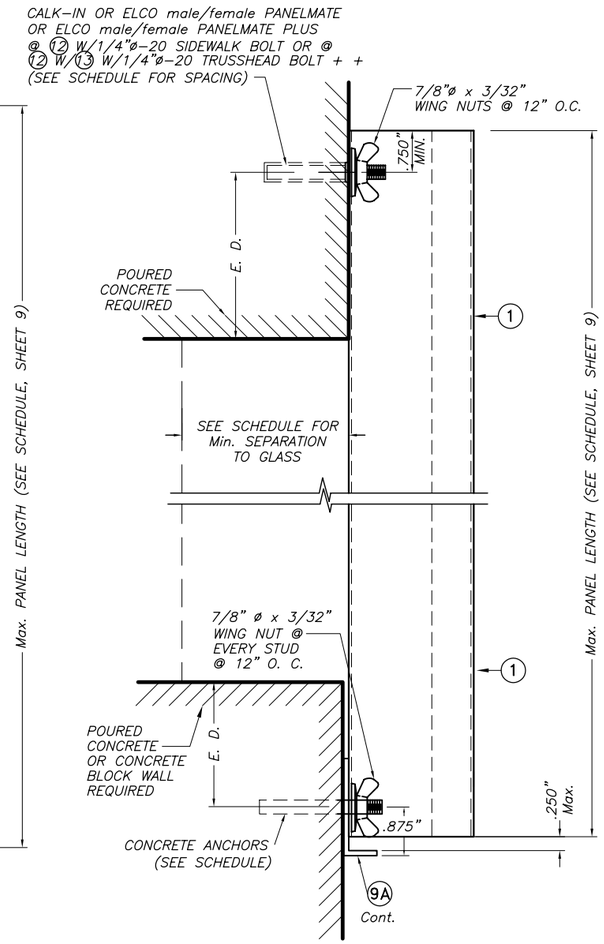

WALL MOUNTING INSTALLATION SECTION 11

SCALE : 3/8" = 1"

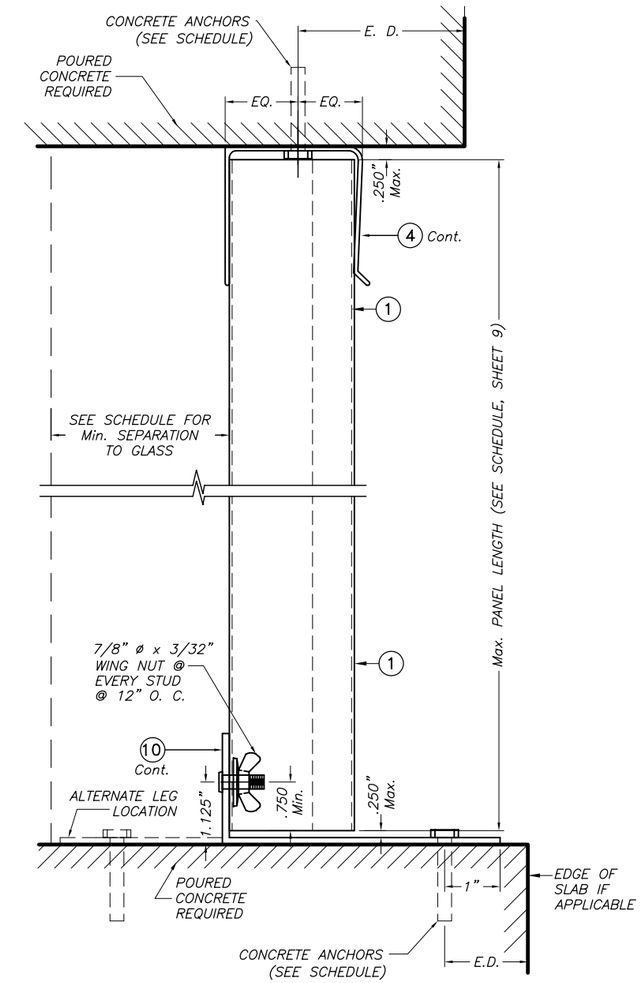

CEILING & FLOOR MOUNTING INSTALLATION SECTION 12

SCALE : 3/8" = 1"

E. D. = EDGE DISTANCE (SEE SCHEDULE ON SHEETS 10 & 11 OF 15)

NOTE FOR COMBINATION OF SECTIONS :

WALL/FLOOR/CEILING MOUNTING SECTIONS CAN BE COMBINED IN ANY WAY TO SUIT ANY INSTALLATION.

+ +
SIDE WALK BOLTS ARE 3/4"ø x 3/32" THICK HEAD MACHINE SCREW W/LENGTH AS PER NOTES A.2 & B.2 (SHEET 1)
+ +
TRUSS HEAD BOLTS ARE 1/2"ø x 1/8" THICK HEAD MACHINE SCREW W/LENGTH AS PER NOTES A.2 & B.2 (SHEET 1)

T.D.I.-2003

TILTECO INC.
TILLIT TESTING & ENGINEERING COMPANY
6595 N.W. 36th. St., Ste. 217, VIRGINIA GARDENS, FL. 33166
Phone : (305)871-1530 . Fax : (305)871-1531
EB-0006719
WALTER A. TILLIT Jr. P. E.
FLORIDA Lic. # 44167

0.050" SOLID BERTHA ALUMINUM STORM PANEL (2.25" DEEP)

EASTERN METAL SUPPLY, INC
9400 TELGE ROAD
HOUSTON, TEXAS 77095

REV. No	DESCRIPTION	DATE	REV. No	DESCRIPTION	DATE
1			3		
2			4		

AS SHOWN
SCALE

1/17/05
DATE

05-012
DRAWING No

SHEET 5 OF 15

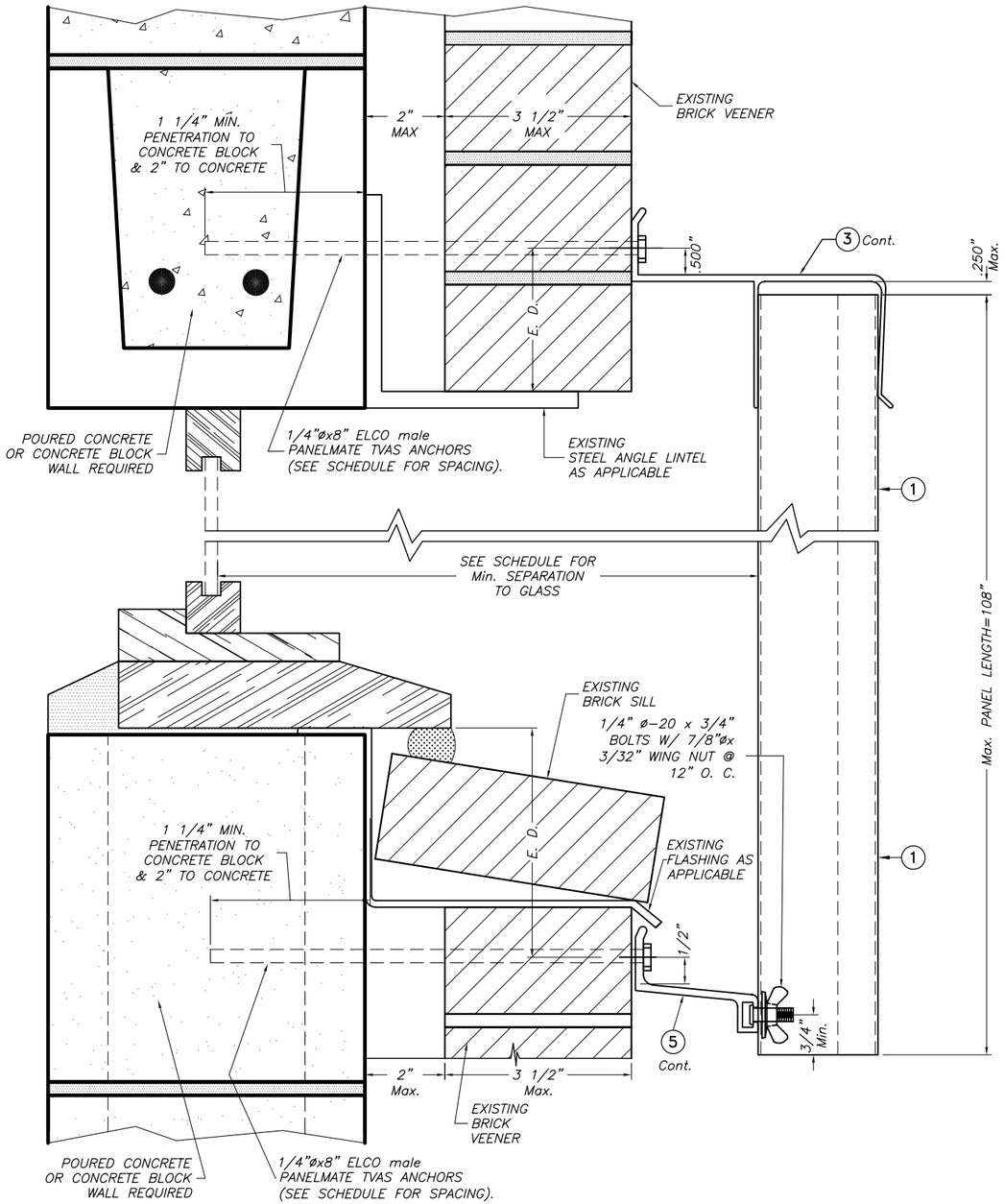

BUILD OUT INSTALLATION
SECTION 13

SCALE : 3/8" = 1"

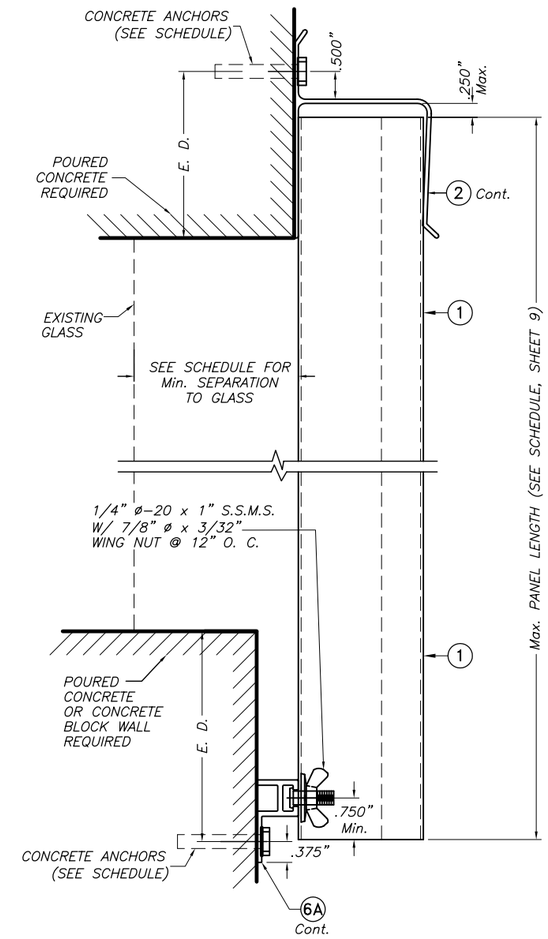

SECTION 14A

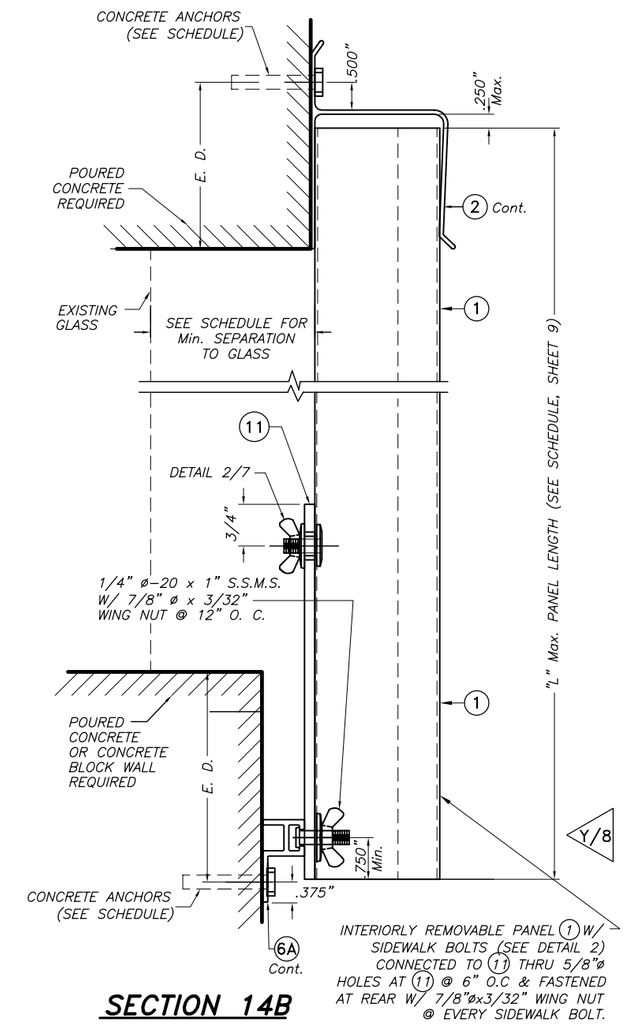

SECTION 14B

WALL MOUNTING INSTALLATIONS
SECTIONS 14

SCALE : 3/8" = 1"

INSTALLATIONS VALID FOR PANELS 1 USED JOINTLY WITH INTERIORLY REMOVABLE PANELS 1

E. D. = EDGE DISTANCE (SEE SCHEDULE ON SHEETS 10 & 11 OF 15)

NOTE FOR COMBINATION OF SECTIONS :

WALL MOUNTING SECTIONS CAN BE COMBINED IN ANY WAY TO SUIT ANY INSTALLATION.

T.D.I.-2003

TILLECO INC.
TILLIT TESTING & ENGINEERING COMPANY
6595 N.W. 36th. St., Ste. 217, VIRGINIA GARDENS, Fl. 33166
Phone : (305)871-1530 . Fax : (305)871-1531
EB-0006719
WALTER A. TILLIT Jr. P. E.
FLORIDA Lic. # 44167

0.050" SOLID BERTHA ALUMINUM STORM PANEL (2.25" DEEP)

EASTERN METAL SUPPLY, INC
9400 TELGE ROAD
HOUSTON, TEXAS 77095

REV. No	DESCRIPTION	DATE	REV. No	DESCRIPTION	DATE
1			3		
2			4		

AS SHOWN
SCALE

1/17/05
DATE

05-012
DRAWING No

SHEET 6 OF 15

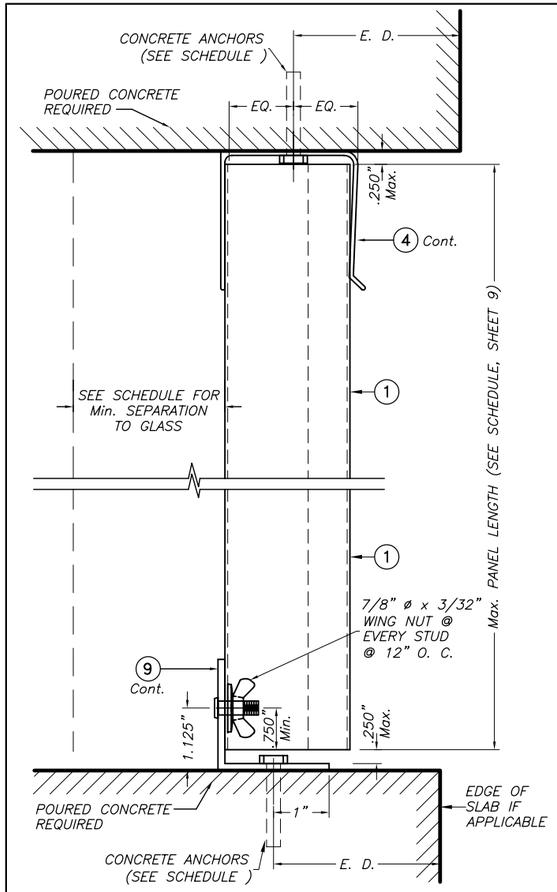

SECTION 15A

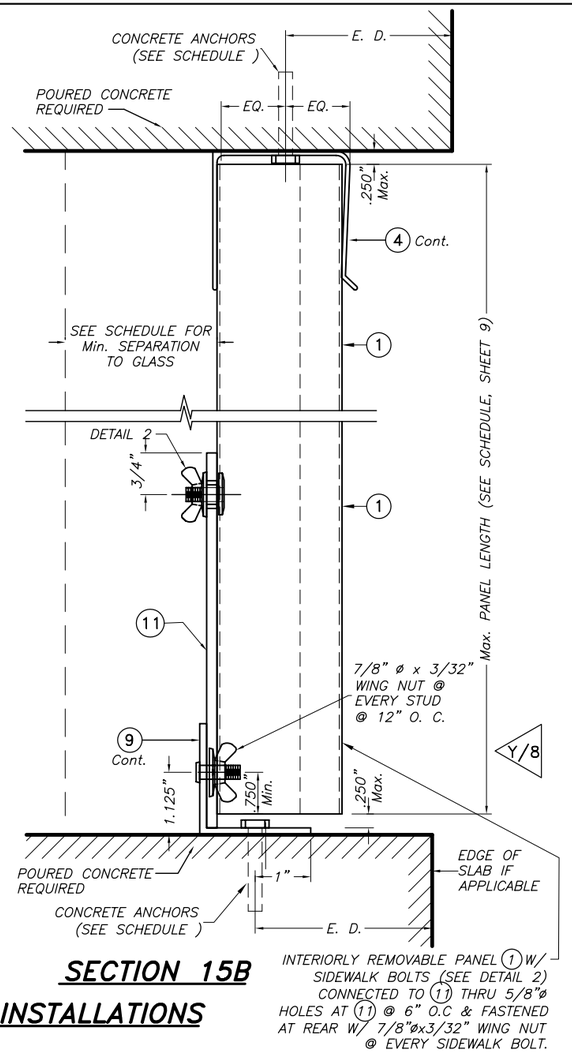

SECTION 15B

CEILING & FLOOR MOUNTING INSTALLATIONS

SECTIONS 15

SCALE : 3/8" = 1"

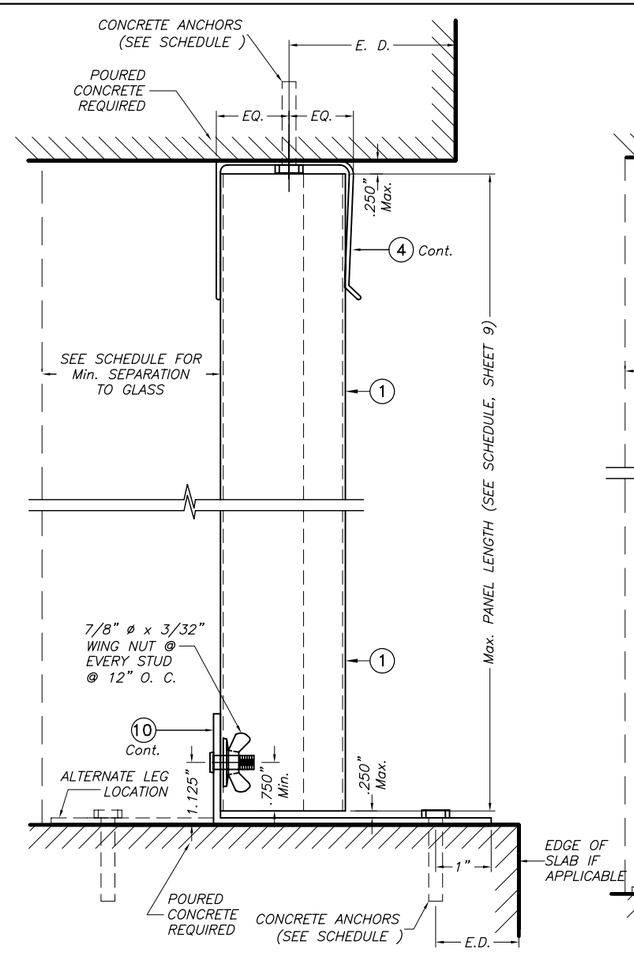

SECTION 16A

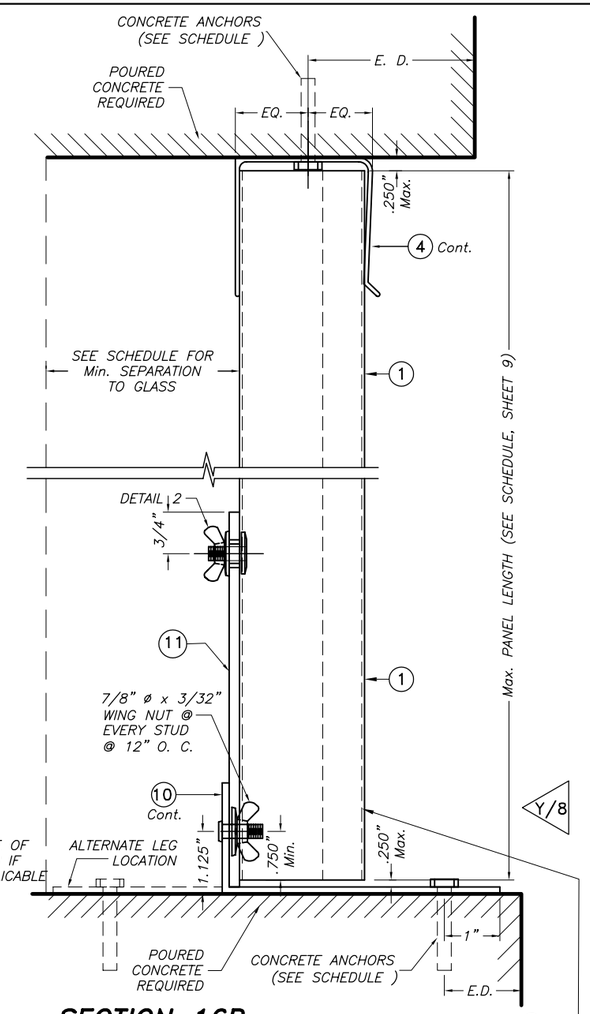

SECTION 16B

CEILING & FLOOR MOUNTING INSTALLATIONS

SECTIONS 16

SCALE : 3/8" = 1"

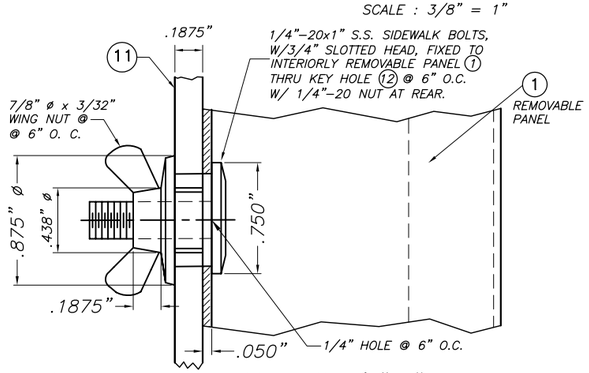

DETAIL 2 – INSTALLATION OF 1/4"x1" SIDEWALK BOLTS @ REMOVABLE PANEL

SCALE: 1" = 1"

INSTALLATIONS VALID FOR PANELS 1 USED JOINTLY WITH INTERIORLY REMOVABLE PANELS 1

E. D. = EDGE DISTANCE (SEE SCHEDULE ON SHEET 10 & 11 OF 15)

NOTE FOR COMBINATION OF SECTIONS :

FLOOR/CEILING MOUNTING SECTIONS CAN BE COMBINED IN ANY WAY TO SUIT ANY INSTALLATION.

T.D.I.–2003

TILTECO INC.
TILLIT TESTING & ENGINEERING COMPANY
6595 N.W. 36th. St., Ste. 217, VIRGINIA GARDENS, Fl. 33166
Phone : (305)871–1530 . Fax : (305)871–1531
EB–0006719
WALTER A. TILLIT Jr. P. E.
FLORIDA Lic. # 44167

0.050" SOLID BERTHA ALUMINUM STORM PANEL (2.25" DEEP)

EASTERN METAL SUPPLY, INC
9400 TELGE ROAD
HOUSTON, TEXAS 77095

REV. No	DESCRIPTION	DATE	REV. No	DESCRIPTION	DATE
1			3		
2			4		

AS SHOWN
SCALE

1/17/05
DATE

05–012
DRAWING No

SHEET 7 OF 15

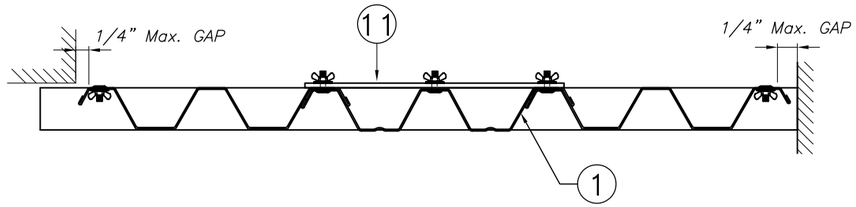

SECTION B–B

SCALE : 1/8" = 1"

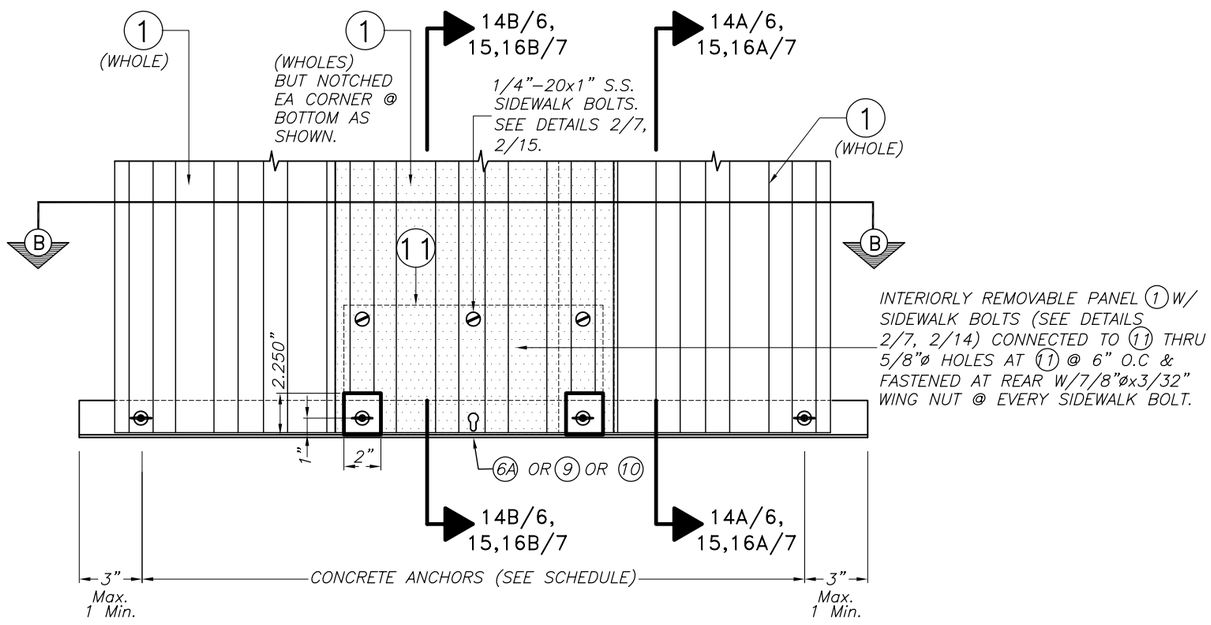

INTERIORLY REMOVABLE STORM PANEL PARTIAL ELEVATION Y

SCALE : 1/8" = 1"

T.D.I.–2003

TILTECO INC.	0.050" SOLID BERTHA ALUMINUM STORM PANEL (2.25" DEEP)	AS SHOWN SCALE
	EASTERN METAL SUPPLY, INC 9400 TELGE ROAD HOUSTON, TEXAS 77095	1/17/05 DATE
		05–012 DRAWING No
		SHEET 8 OF 15

TILLIT TESTING & ENGINEERING COMPANY
6595 N.W. 36th. St., Ste. 217, VIRGINIA GARDENS, Fl. 33166
Phone : (305)871–1530 . Fax : (305)871–1531
EB–0006719
WALTER A. TILLIT Jr. P. E.
FLORIDA Lic. # 44167

REV. No	DESCRIPTION	DATE	REV. No	DESCRIPTION	DATE
1	PANEL LIP	8/21/07	3		
2			4		

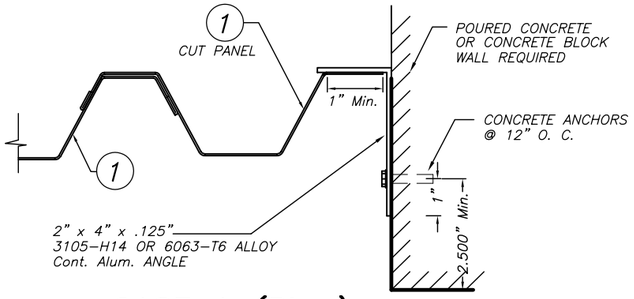

CASE A (Plan)

SCALE: 1/4" = 1"

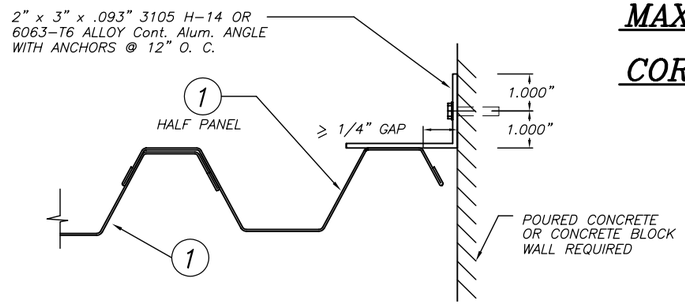

CASE D (Plan)

SCALE: 1/4" = 1"

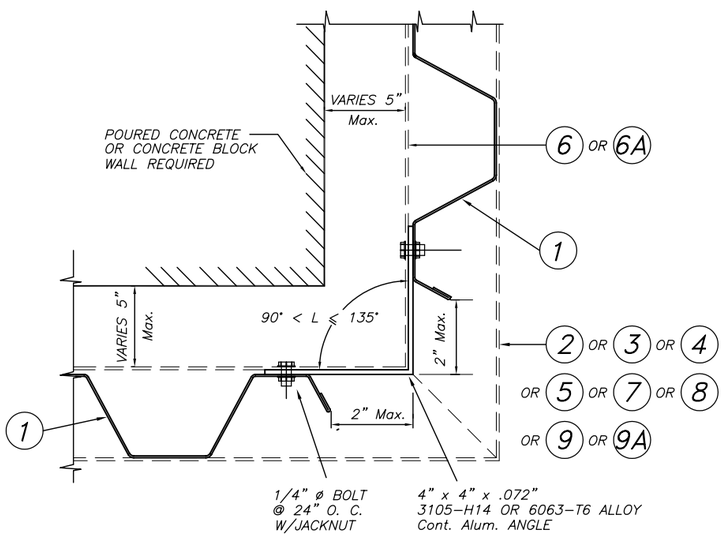

CASE B (Plan)

SCALE: 1/4" = 1"

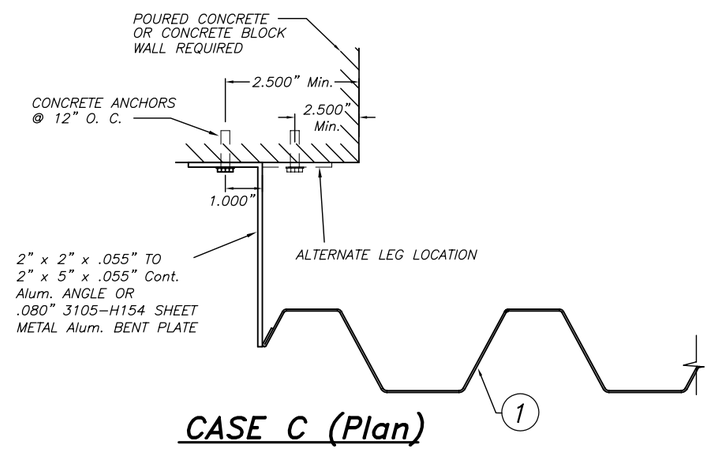

CASE C (Plan)

SCALE: 1/4" = 1"

MAXIMUM DESIGN PRESSURE RATING "W" (p.s.f.) AND CORRESPONDING MAXIMUM PANEL LENGTH "L" SCHEDULE

MAXIMUM DESIGN PRESSURE RATING W (p.s.f.)	Max. PANEL LENGTH L (ft.) (SEE SECTIONS)	MINIMUM SEPARATION TO GLASS	APPLICABLE TO SECTIONS # & ANY COMBINATION OF THEM
+65.0, −77.0	8'–0" OR LESS	2 1/4"	1 THRU 8
+65.0, −77.0	9'–0" OR LESS	3 11/16"	1 THRU 8
+65.0, −72.0	9'–0" OR LESS	3 1/2"	11
+62.0, −73.3	10'–0" OR LESS	3 7/8"	2, 6, 7 & 8
+63.5, −63.5	9'–0" OR LESS	3 1/2"	9, 14, 10
+65.0, −65.0	9'–0" OR LESS	3 1/2"	12, 15, 16
+63.5, −63.5	9'–0" OR LESS	3 3/4"	13

END CLOSURES DETAILS

T.D.I.–2003

TILTECO INC.
TILLIT TESTING & ENGINEERING COMPANY
6595 N.W. 36th. St., Ste. 217, VIRGINIA GARDENS, Fl. 33166
Phone : (305)871–1530 . Fax : (305)871–1531
EB–0006719
WALTER A. TILLIT Jr. P. E.
FLORIDA Lic. # 44167

0.050" SOLID BERTHA ALUMINUM STORM PANEL (2.25" DEEP)

EASTERN METAL SUPPLY, INC
9400 TELGE ROAD
HOUSTON, TEXAS 77095

REV. No	DESCRIPTION	DATE	REV. No	DESCRIPTION	DATE
1	PANEL LIP	8/20/07	3		
2			4		

AS SHOWN
SCALE

1/17/05
DATE

05–012
DRAWING No

MAXIMUM DESIGN PRESSURE RATING "W" (p.s.f.) AND CORRESPONDING MAXIMUM ANCHOR SPACING SCHEDULE FOR INSTALLATIONS IN CONCRETE AND CONCRETE BLOCK STRUCTURES

E. D. = EDGE DISTANCE

MAXIMUM DESIGN LOAD W (p.s.f.)	MAXIMUM ANCHORS SPACING FOR E. D. = 3 1/2"*																APPLICABLE TO SECTIONS # & ANY COMBINATION OF THEM	MAXIMUM PANEL LENGTH "L" (ft.)
	REGULAR TAPCONS		CRETE–FLEX SS4		ZAMAC NAILIN		CALK–IN		CF TAP–GRIP		PANELMATES		PANELMATE PLUS		410 S.S. TAPCON			
	TO CONCRETE	TO MASONRY	TO CONCRETE	TO MASONRY	TO CONCRETE	TO MASONRY	TO CONCRETE	TO MASONRY	TO CONCRETE	TO MASONRY	TO CONCRETE	TO MASONRY	TO CONCRETE	TO MASONRY	TO CONCRETE	TO MASONRY		
+63.5, –63.5	8"	N/A	N/A	N/A	4"	N/A	8"	N/A	5"	N/A	3 1/2"	N/A	N/A	N/A	N/A	N/A	1 (TOP)	9'–0" OR LESS
	12"	8"	N/A	N/A	12"	10"	12"	12"	12"	8"	11"	11"	12"	12"	N/A	N/A	1 (BOTTOM)	
	12"	N/A	N/A	N/A	12"	N/A	12"	N/A	12"	N/A	11"	N/A	N/A	N/A	N/A	N/A	2 (TOP)	
	12"	8"	N/A	N/A	12"	10"	12"	12"	12"	8"	11"	11"	12"	12"	N/A	N/A	2 (BOTTOM)	
	12"	N/A	N/A	N/A	12"	N/A	12"	N/A	12"	N/A	11"	N/A	N/A	N/A	N/A	N/A	3 (TOP)	
	12"	8"	N/A	N/A	12"	10"	12"	12"	12"	8"	11"	11"	12"	12"	N/A	N/A	3 (BOTTOM)	
	12"	N/A	N/A	N/A	12"	N/A	12"	N/A	12"	N/A	11"	N/A	N/A	N/A	N/A	N/A	4 (TOP)	
	12"	8"	N/A	N/A	12"	10"	12"	12"	12"	8"	11"	11"	12"	12"	N/A	N/A	4 (BOTTOM)	
	12"	N/A	N/A	N/A	12"	N/A	12"	N/A	12"	N/A	11"	N/A	N/A	N/A	N/A	N/A	5 (TOP)	
	12"	8"	N/A	N/A	12"	10"	12"	12"	12"	8"	11"	11"	12"	12"	N/A	N/A	5 (BOTTOM)	
	11"	N/A	12"	N/A	7 1/2"	N/A	11 1/2"	N/A	8 1/2"	N/A	12"	N/A	12"	N/A	12"	N/A	6 (TOP/BOTTOM)	
	10"	N/A	12"	N/A	6 1/2"	N/A	10 1/2"	N/A	7"	N/A	12"	N/A	12"	N/A	11"	N/A	7 (TOP/BOTTOM)	
	N/A	N/A	N/A	N/A	N/A	N/A	12"	12"	12"	6"	6"	6"	12"	12"	N/A	N/A	8 (TOP/BOTTOM)	
	12"	N/A	12"	N/A	N/A	N/A	12"	N/A	N/A	N/A	12"	N/A	12"	N/A	12"	N/A	9 (TOP)	
	12"	8"	12"	12"	N/A	N/A	12"	12"	N/A	N/A	12"	11"	12"	9"	12"	10"	9 (BOTTOM)	
	N/A	N/A	N/A	N/A	N/A	N/A	12"	6"	N/A	N/A	12"	6"	12"	6"	N/A	N/A	10 (TOP)	
	12"	7 1/2"	12"	12"	N/A	N/A	12"	10 1/2"	N/A	N/A	12"	10"	12"	8 1/2"	12"	9"	10 (BOTTOM)	
	N/A	N/A	N/A	N/A	N/A	N/A	N/A	N/A	N/A	N/A	12"	11"	N/A	N/A	N/A	N/A	13 (TOP)	
	N/A	N/A	N/A	N/A	N/A	N/A	N/A	N/A	N/A	N/A	12"	6"	N/A	N/A	N/A	N/A	13 (BOTTOM)	
	12"	N/A	12"	N/A	N/A	N/A	12"	N/A	N/A	N/A	12"	N/A	12"	N/A	12"	N/A	14 (TOP)	
	12"	8"	12"	12"	N/A	N/A	12"	12"	N/A	N/A	12"	11"	12"	9"	12"	10"	14A (BOTTOM)	
	12"	6"	12"	12"	N/A	N/A	12"	9"	N/A	N/A	12"	8 1/2"	12"	7"	12"	8"	14B (BOTTOM)	
	12"	N/A	12"	N/A	N/A	N/A	12"	N/A	N/A	N/A	12"	N/A	12"	N/A	12"	N/A	12 (TOP)	
	11"	N/A	12"	N/A	N/A	N/A	11 1/2"	N/A	N/A	N/A	12"	N/A	12"	N/A	12"	N/A	12 (BOTTOM)	
	12"	N/A	12"	N/A	N/A	N/A	12"	N/A	N/A	N/A	12"	N/A	12"	N/A	12"	N/A	15 (TOP)	
	11"	N/A	12"	N/A	N/A	N/A	11 1/2"	N/A	N/A	N/A	12"	N/A	12"	N/A	12"	N/A	15A (BOTTOM)	
	3"	N/A	4 1/2"	N/A	N/A	N/A	3"	N/A	N/A	N/A	4"	N/A	4"	N/A	4"	N/A	15B (BOTTOM)	
	12"	N/A	12"	N/A	N/A	N/A	12"	N/A	N/A	N/A	12"	N/A	12"	N/A	12"	N/A	16 (TOP)	
	11"	N/A	12"	N/A	N/A	N/A	11 1/2"	N/A	N/A	N/A	12"	N/A	12"	N/A	12"	N/A	16A (BOTTOM)	
	3"	N/A	4 1/2"	N/A	N/A	N/A	3"	N/A	N/A	N/A	4"	N/A	4"	N/A	4"	N/A	16B (BOTTOM)	
+65.0, –65.0	6"	N/A	N/A	N/A	6"	N/A	6"	N/A	6"	N/A	6"	N/A	N/A	N/A	N/A	N/A	2 (TOP)	9'–0" TO 10'–0"
	6"	6"	N/A	N/A	6"	6"	6"	6"	6"	6"	6"	6"	N/A	N/A	N/A	N/A	2 (BOTTOM)	
	6"	N/A	N/A	N/A	6"	N/A	6"	N/A	6"	N/A	5 1/2"	N/A	N/A	N/A	N/A	N/A	6 (TOP/BOTTOM)	
	6"	N/A	N/A	N/A	5 1/2"	N/A	6"	N/A	6"	N/A	4 1/2"	N/A	N/A	N/A	N/A	N/A	7 (TOP/BOTTOM)	
	N/A	N/A	N/A	N/A	N/A	N/A	6"	6"	6"	6"	6"	6"	N/A	N/A	N/A	N/A	8 (TOP/BOTTOM)	

* MAXIMUM ANCHOR SPACINGS ARE VALID FOR 3 1/2" EDGE DISTANCE. FOR E. D. LESS THAN 3 1/2", REDUCE ANCHOR SPACING BY MULTIPLYING SPACING SHOWN ON SCHEDULE BY THE FOLLOWING FACTORS. (NOTE: Min. E. D. FOR CALK–IN ANCHORS IS 2 1/2")
FOR THIS OPERATION TO BE POSIBLE, REDUCED SPACING OBTAINED USING FACTOR SHALL NOT BE LESS THAN MINIMUM SPACING INDICATED FOR EACH ANCHOR TYPE AT ANCHORS LEGEND.

ACTUAL E. D.	FACTOR		
	REGULAR TAPCON, 410 S.S. TAPCON, CRETE–FLEX SS4, ZAMAC NAILING, PANELMATE OR PANELMATE PLUS.	CALK–IN	CF TAP–GRIP
3"	.86	.75	1.00
2 1/2"	.71	.50	.80
2"	.50	–	–

ANCHORS LEGEND

ANCHOR TYPE	Min. ANCHOR SPACING
REGULAR TAPCON, 410 S.S. TAPCON, CRETE–FLEX SS4, ZAMAC NAILING, CF TAP–GRIP, PANELMATE OR PANELMATE PLUS.	3.0"
CALK–IN	2.5"

T.D.I.–2003

TILLECO INC.
TILLIT TESTING & ENGINEERING COMPANY
6595 N.W. 36th. St., Ste. 217, VIRGINIA GARDENS, Fl. 33166
Phone : (305)871–1530 . Fax : (305)871–1531
EB–0006719
WALTER A. TILLIT Jr. P. E.
FLORIDA Lic. # 44167

0.050" SOLID BERTHA ALUMINUM STORM PANEL (2.25" DEEP)

EASTERN METAL SUPPLY, INC
9400 TELGE ROAD
HOUSTON, TEXAS 77095

REV. No	DESCRIPTION	DATE	REV. No	DESCRIPTION	DATE
1			3		
2			4		

AS SHOWN
SCALE

1/17/05
DATE

05–012
DRAWING No

MAXIMUM DESIGN PRESSURE RATING "W" (p.s.f.) AND CORRESPONDING MAXIMUM ANCHOR SPACING SCHEDULE FOR INSTALLATIONS INTO CONCRETE AND CONCRETE BLOCK STRUCTURES

MAXIMUM DESIGN LOAD W (p.s.f.)	MAXIMUM ANCHORS SPACING FOR E. D. = 3 1/2"*																APPLICABLE TO SECTIONS # & ANY COMBINATION OF THEM	MAXIMUM PANEL LENGTH "L" (ft.)
	REGULAR TAPCONS		CRETE–FLEX SS4		ZAMAC NAILIN		CALK–IN		CF TAP–GRIP		PANELMATES		PANELMATE PLUS		410 S.S. TAPCON			
	TO CONCRETE	TO MASONRY	TO CONCRETE	TO MASONRY	TO CONCRETE	TO MASONRY	TO CONCRETE	TO MASONRY	TO CONCRETE	TO MASONRY	TO CONCRETE	TO MASONRY	TO CONCRETE	TO MASONRY	TO CONCRETE	TO MASONRY		
+65.0, –77.0	6"	N/A	N/A	N/A	3"	N/A	6"	N/A	3 1/2"	N/A	2 1/2"	N/A	N/A	N/A	N/A	N/A	1 (TOP)	9'–0" OR LESS
	12"	7"	N/A	N/A	11"	8"	12"	10"	12"	6 1/2"	9 1/2"	9 1/2"	N/A	N/A	N/A	N/A	1 (BOTTOM)	
	12"	N/A	N/A	N/A	11"	N/A	12"	N/A	12"	N/A	9 1/2"	N/A	N/A	N/A	N/A	N/A	2 (TOP)	
	12"	7"	N/A	N/A	11"	8"	12"	10"	12"	6 1/2"	9 1/2"	9 1/2"	N/A	N/A	N/A	N/A	2 (BOTTOM)	
	12"	N/A	N/A	N/A	11"	N/A	12"	N/A	12"	N/A	9 1/2"	N/A	N/A	N/A	N/A	N/A	3 (TOP)	
	12"	7"	N/A	N/A	11"	8"	12"	10"	12"	6 1/2"	9 1/2"	9 1/2"	N/A	N/A	N/A	N/A	3 (BOTTOM)	
	12"	N/A	N/A	N/A	11"	N/A	12"	N/A	12"	N/A	9 1/2"	N/A	N/A	N/A	N/A	N/A	4 (TOP)	
	12"	7"	N/A	N/A	11"	8"	12"	10"	12"	6 1/2"	9 1/2"	9 1/2"	N/A	N/A	N/A	N/A	4 (BOTTOM)	
	12"	N/A	N/A	N/A	11"	N/A	12"	N/A	12"	N/A	9 1/2"	N/A	N/A	N/A	N/A	N/A	5 (TOP)	
	12"	5 1/2"	N/A	N/A	9 1/2"	6 1/2"	12"	8"	10"	5"	7 1/2"	7 1/2"	N/A	N/A	N/A	N/A	5 (BOTTOM)	
	9 1/2"	N/A	N/A	N/A	6 1/2"	N/A	10"	N/A	7"	N/A	5"	N/A	N/A	N/A	N/A	N/A	6 (TOP/BOTTOM)	
	8 1/2"	N/A	N/A	N/A	5 1/2"	N/A	8 1/2"	N/A	6"	N/A	4 1/2"	N/A	N/A	N/A	N/A	N/A	7 (TOP/BOTTOM)	
	N/A	N/A	N/A	N/A	N/A	N/A	12"	6"	12"	6"	6"	6"	N/A	N/A	N/A	N/A	8 (TOP/BOTTOM)	
+65.0, –72.0	9"	N/A	12"	N/A	N/A	N/A	9 1/2"	N/A	N/A	N/A	11"	N/A	12"	N/A	10"	N/A	7 (TOP/BOTTOM)	9'–0" OR LESS
	N/A	N/A	N/A	N/A	N/A	N/A	12"	6"	N/A	N/A	12"	6"	12"	6"	N/A	N/A	11 (TOP)	
	12"	7 1/2"	12"	12"	N/A	N/A	12"	10 1/2"	N/A	N/A	12"	10"	12"	8 1/2"	12"	9"	11 (BOTTOM)	
+62.0, –73.3	6"	N/A	N/A	N/A	6"	N/A	6"	N/A	6"	N/A	6"	N/A	N/A	N/A	N/A	N/A	2 (TOP)	9'–0" TO 10'–0"
	6"	6"	N/A	N/A	6"	6"	6"	6"	6"	6"	6"	6"	N/A	N/A	N/A	N/A	2 (BOTTON)	
	6"	N/A	N/A	N/A	6"	N/A	6"	N/A	6"	N/A	5"	N/A	N/A	N/A	N/A	N/A	6 (TOP/BOTTOM)	
	6"	N/A	N/A	N/A	5"	N/A	6"	N/A	5 1/2"	N/A	4"	N/A	N/A	N/A	N/A	N/A	7 (TOP/BOTTOM)	
	N/A	N/A	N/A	N/A	N/A	N/A	6"	6"	6"	6"	6"	6"	N/A	N/A	N/A	N/A	8 (TOP/BOTTOM)	

E. D. = EDGE DISTANCE

* MAXIMUM ANCHOR SPACINGS ARE VALID FOR 3 1/2" EDGE DISTANCE. FOR E. D. LESS THAN 3 1/2", REDUCE ANCHOR SPACING BY MULTIPLYING SPACING SHOWN ON SCHEDULE BY THE FOLLOWING FACTORS. (NOTE: Min. E. D. FOR CALK–IN ANCHORS IS 2 1/2")
FOR THIS OPERATION TO BE POSIBLE, REDUCED SPACING OBTAINED USING FACTOR SHALL NOT BE LESS THAN MINIMUM SPACING INDICATED FOR EACH ANCHOR TYPE AT ANCHORS LEGEND.

ACTUAL E. D.	FACTOR		
	REGULAR TAPCON, 410 S.S. TAPCON, CRETE–FLEX SS4, ZAMAC NAILING, PANELMATE OR PANELMATE PLUS.	CALK–IN	CF TAP–GRIP
3"	.86	.75	1.00
2 1/2"	.71	.50	.80
2"	.50	–	–

ANCHORS LEGEND

ANCHOR TYPE	Min. ANCHOR SPACING
REGULAR TAPCON, 410 S.S. TAPCON, CRETE–FLEX SS4, ZAMAC NAILING, CF TAP–GRIP, PANELMATE OR PANELMATE PLUS.	3.0"
CALK–IN	2.5"

T.D.I.–2003

TILTECO INC.
TILLIT TESTING & ENGINEERING COMPANY
6595 N.W. 36th. St., Ste. 217, VIRGINIA GARDENS, Fl. 33166
Phone : (305)871–1530 . Fax : (305)871–1531
EB–0006719
WALTER A. TILLIT Jr. P. E.
FLORIDA Lic. # 44167

0.050" SOLID BERTHA ALUMINUM STORM PANEL (2.25" DEEP)

EASTERN METAL SUPPLY, INC
9400 TELGE ROAD
HOUSTON, TEXAS 77095

REV. No	DESCRIPTION	DATE	REV. No	DESCRIPTION	DATE
1			3		
2			4		

AS SHOWN
SCALE

1/17/05
DATE

05–012
DRAWING No

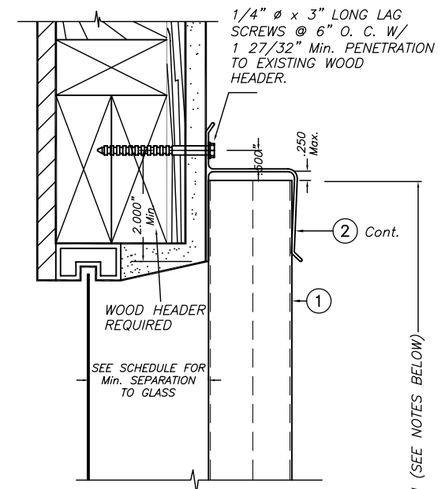

ALTERNATIVE 1

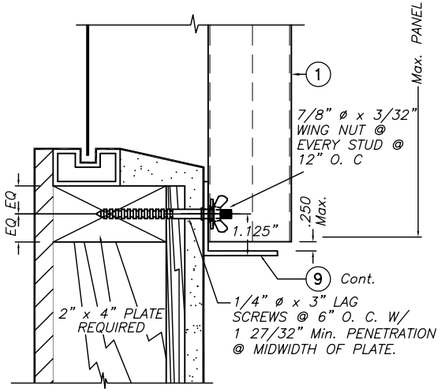

ALTERNATIVE 2

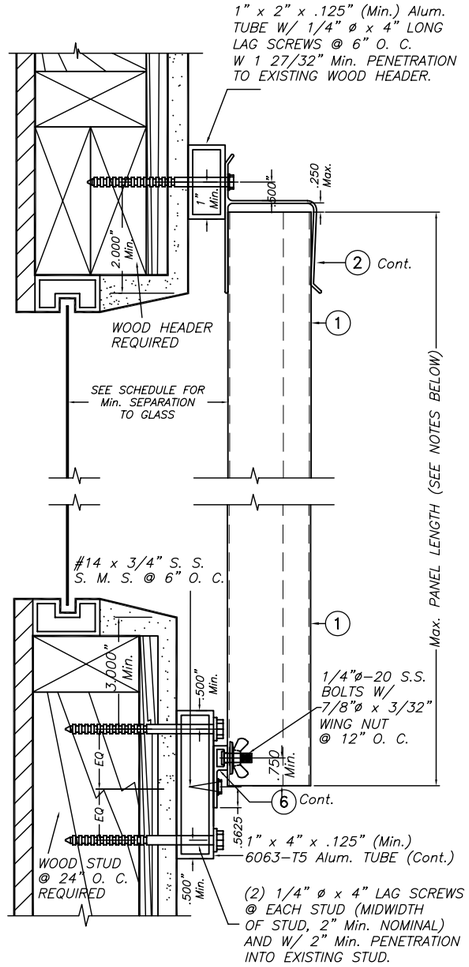

ALTERNATIVE 4

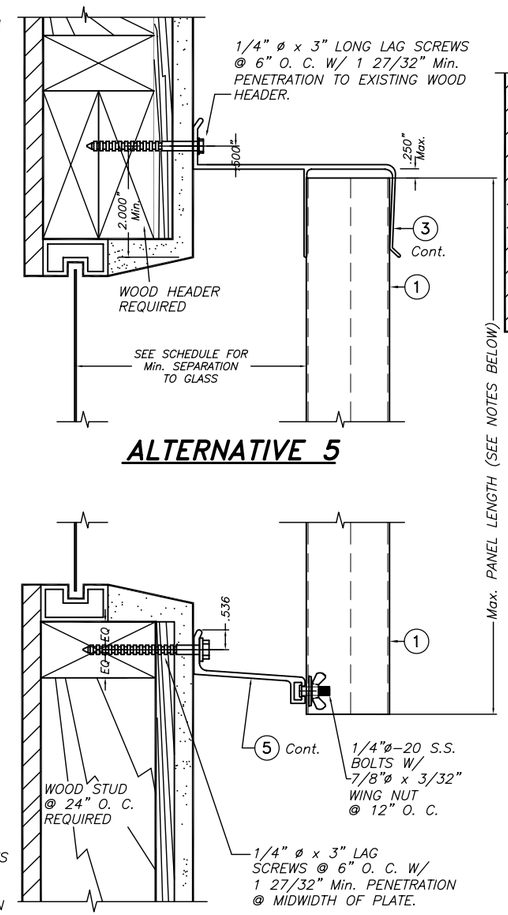

ALTERNATIVE 5

ALTERNATIVE 6

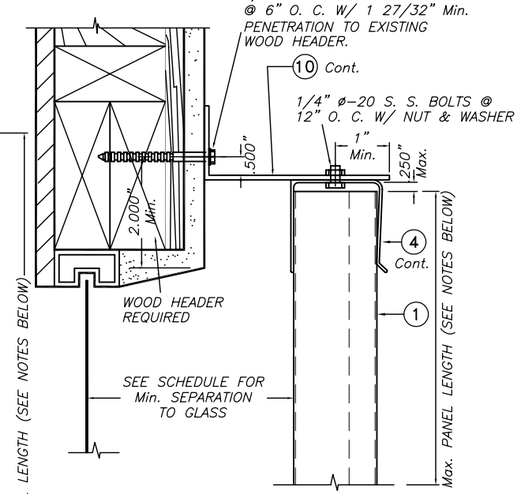

ALTERNATIVE 7

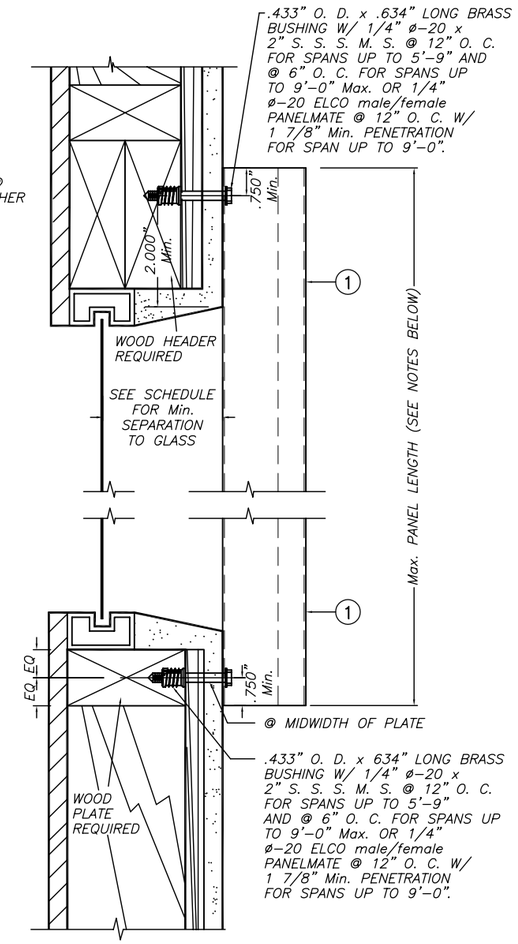

ALTERNATIVE 8

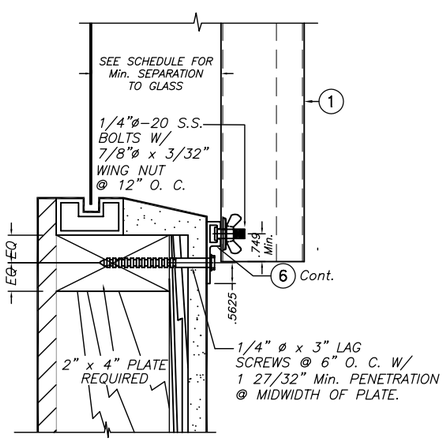

ALTERNATIVE 3

WALL MOUNTING INSTALLATIONS

SECTIONS A

SCALE : 1/4" = 1"

NOTE FOR COMBINATION OF SECTIONS:

WALL MOUNTING SECTIONS CAN BE COMBINED IN ANY WAY TO SUIT ANY INSTALLATION.

NOTES:

1. INSTALLATIONS ARE ONLY VALID FOR DESIGN WIND LOADS UP TO +65.0, -72.0 psf AND PANEL'S LENGTHS UP TO 9'-0", EXCEPT AS NOTED.
2. NEW 2" x 6" P. T. TO BE SOUTHERN PINE No. 2, SURFACED DRY WITH 19 % M. M. C. W/ SPECIFIC DENSITY OF 0.55.
3. FOR NEW WOOD FRAME CONSTRUCTION: WOOD MEMBERS TO BE SOUTHERN PINE No. 2, W/ SPECIFIC DENSITY OF 0.55 OR EQUAL.

INSTALLATION DETAILS ON EXISTING WOOD BUILDINGS

T.D.I.-2003

TILTECO INC.
TILLIT TESTING & ENGINEERING COMPANY
6595 N.W. 36th. St., Ste. 217, VIRGINIA GARDENS, Fl. 33166
Phone : (305)871-1530 . Fax : (305)871-1531
EB-0006719
WALTER A. TILLIT Jr. P. E.
FLORIDA Lic. # 44167

0.050" SOLID BERTHA ALUMINUM STORM PANEL (2.25" DEEP)

EASTERN METAL SUPPLY, INC
9400 TELGE ROAD
HOUSTON, TEXAS 77095

REV. No	DESCRIPTION	DATE	REV. No	DESCRIPTION	DATE
1			3		
2			4		

AS SHOWN
SCALE

1/17/05
DATE

05-012
DRAWING No

SHEET 12 OF 15

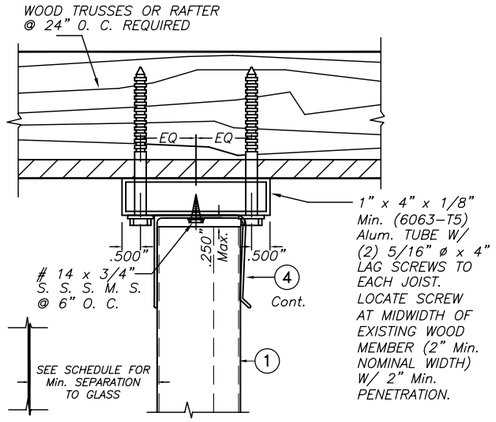

ALTERNATIVE 9A

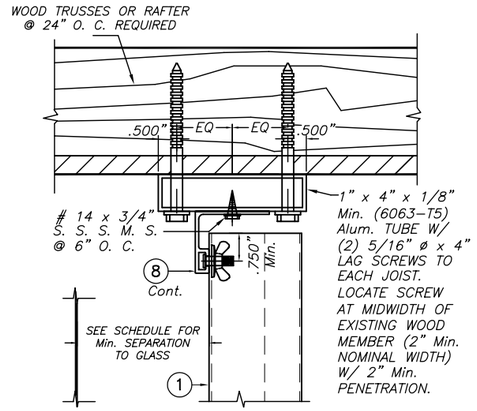

ALTERNATIVE 10

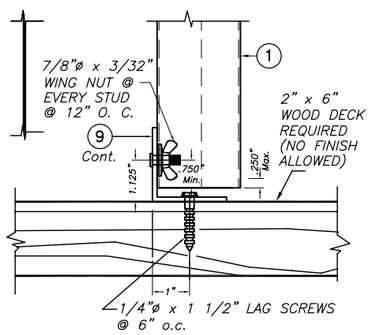

ALTERNATIVE 9

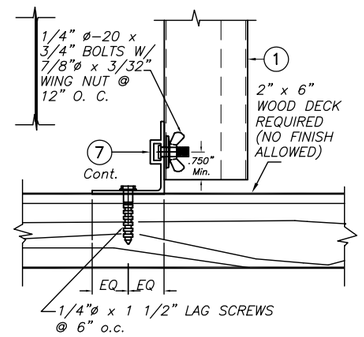

ALTERNATIVE 11

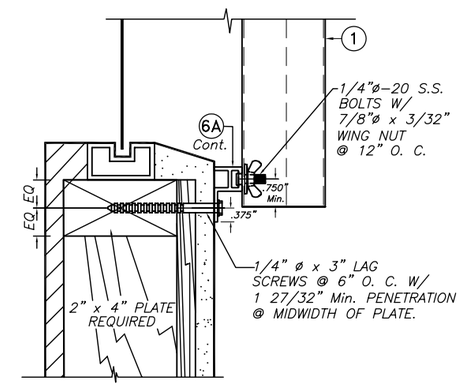

ALTERNATIVE 12 *

* VALID FOR Max. +63.5, -63.5 psf.

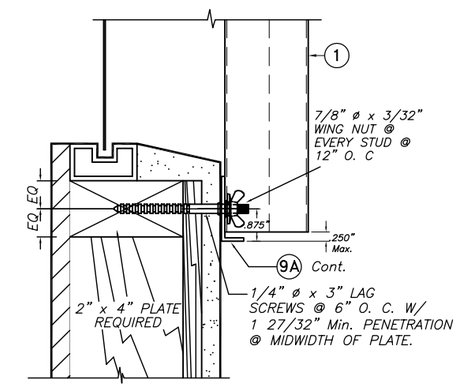

ALTERNATIVE 14

CEILING & FLOOR MOUNTING INSTALLATIONS

SCALE : 1/4" = 1"

WALL MOUNTING INSTALLATION

SCALE : 1/4" = 1"

NOTE FOR COMBINATION OF SECTIONS:

WALL/FLOOR/CEILING MOUNTING SECTIONS CAN BE COMBINED IN ANY WAY TO SUIT ANY INSTALLATION.

INSTALLATION DETAILS ON EXISTING WOOD BUILDINGS

NOTES:

1. INSTALLATIONS ARE ONLY VALID FOR DESIGN WIND LOADS UP TO +65.0, -72.0 psf AND PANEL'S LENGTHS UP TO 9'-0", EXCEPT AS NOTED.
2. NEW 2" x 6" P. T. TO BE SOUTHERN PINE No. 2, SURFACED DRY WITH 19 % M. M. C. W/ SPECIFIC DENSITY OF 0.55.
3. FOR NEW WOOD FRAME CONSTRUCTION: WOOD MEMBERS TO BE SOUTHERN PINE No. 2, W/ SPECIFIC DENSITY OF 0.55 OR EQUAL.

T.D.I.-2003

TILTECO INC.
TILLIT TESTING & ENGINEERING COMPANY
6595 N.W. 36th. St., Ste. 217, VIRGINIA GARDENS, Fl. 33166
Phone : (305)871-1530 . Fax : (305)871-1531
EB-0006719
WALTER A. TILLIT Jr. P. E.
FLORIDA Lic. # 44167

0.050" SOLID BERTHA ALUMINUM STORM PANEL (2.25" DEEP)

EASTERN METAL SUPPLY, INC
9400 TELGE ROAD
HOUSTON, TEXAS 77095

REV. No	DESCRIPTION	DATE	REV. No	DESCRIPTION	DATE
1			3		
2			4		

AS SHOWN
SCALE

1/17/05
DATE

05-012
DRAWING No

SHEET 13 OF 15

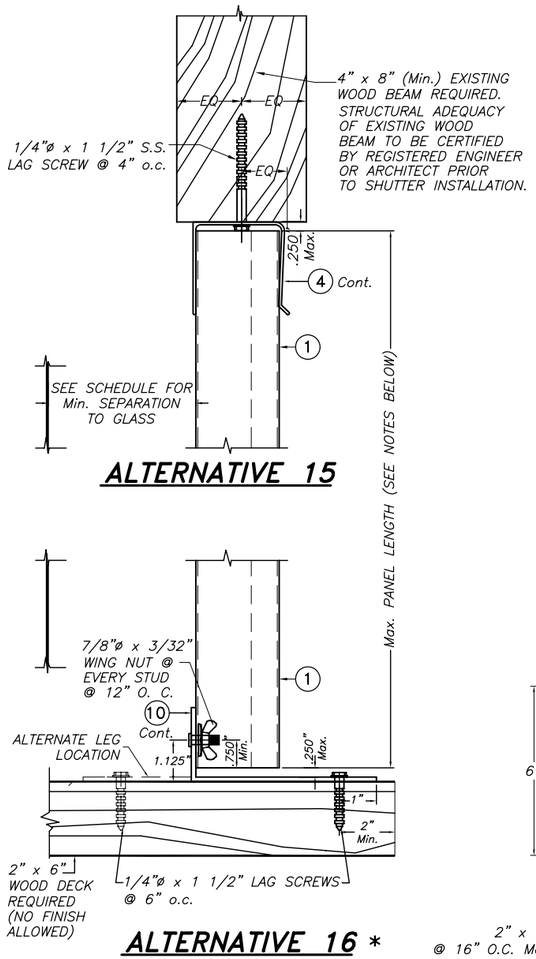

ALTERNATIVE 15

ALTERNATIVE 16 *

CEILING & FLOOR MOUNTING INSTALLATIONS

SCALE : 1/4" = 1"

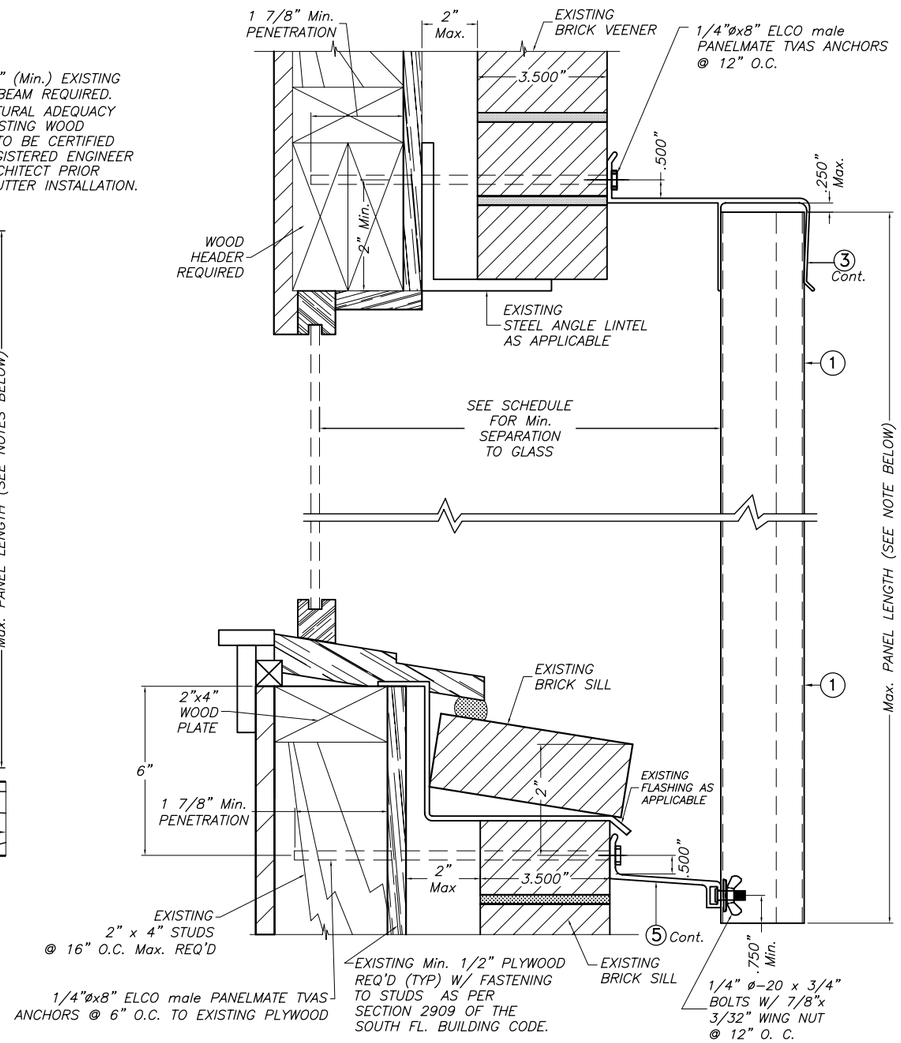

ALTERNATIVE 17 *

* VALID FOR Max. +63.5, –63.5 psf.

BUILD–OUT INSTALLATION

SCALE : 1/4" = 1"

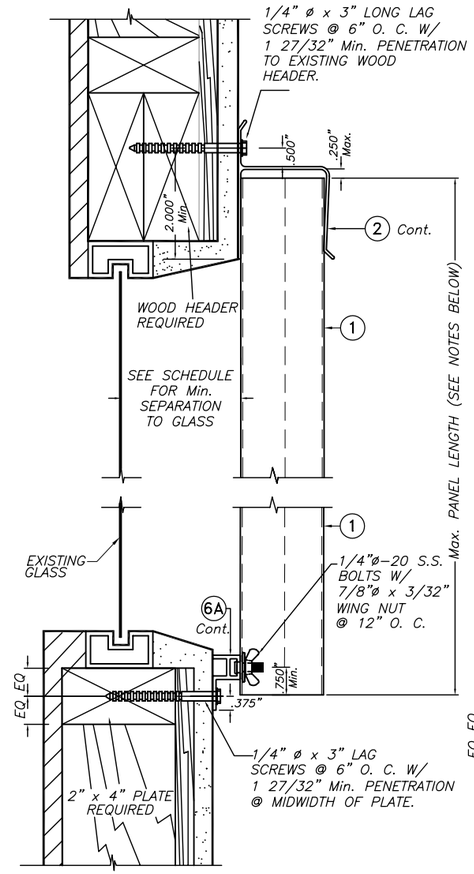

ALTERNATIVE 18A *

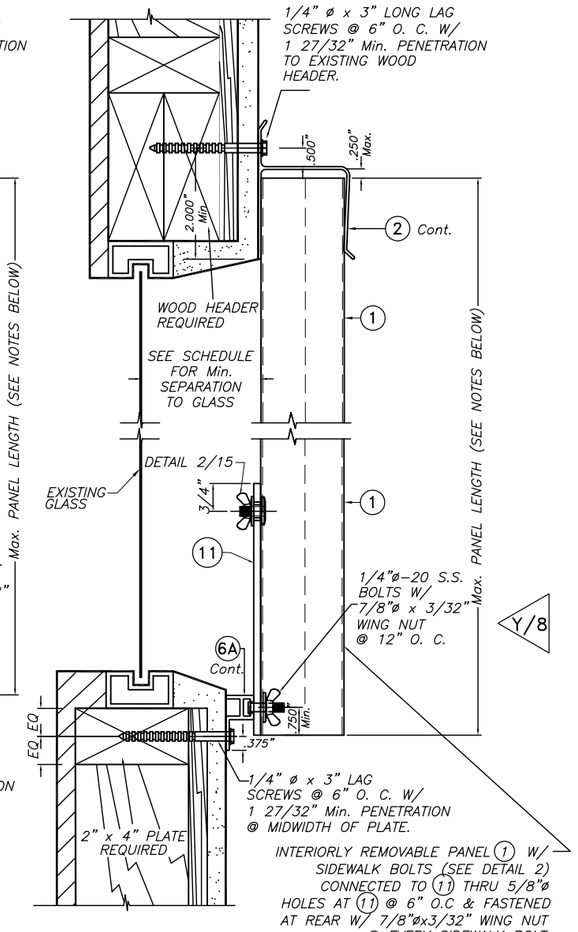

ALTERNATIVE 18B *

WALL MOUNTING INSTALLATIONS SECTIONS 18

SCALE : 1/4" = 1"

* VALID FOR Max. +63.5, –63.5 psf.

INSTALLATIONS VALID FOR PANELS 1 USED JOINTLY WITH INTERIORLY REMOVABLE PANELS 1

NOTE FOR COMBINATION OF SECTIONS:

WALL/FLOOR/CEILING MOUNTING SECTIONS CAN BE COMBINED IN ANY WAY TO SUIT ANY INSTALLATION.

INSTALLATION DETAILS ON EXISTING WOOD BUILDINGS

NOTES:

1. INSTALLATIONS ARE ONLY VALID FOR DESIGN WIND LOADS UP TO +65.0, –65.0 psf AND PANEL'S LENGTHS UP TO 9'–0", EXCEPT AS NOTED.
2. NEW 2" x 6" P. T. TO BE SOUTHERN PINE No. 2, SURFACED DRY WITH 19 % M. M. C. W/ SPECIFIC DENSITY OF 0.55.
3. FOR NEW WOOD FRAME CONSTRUCTION: WOOD MEMBERS TO BE SOUTHERN PINE No. 2, W/ SPECIFIC DENSITY OF 0.55 OR EQUAL.

T.D.I.–2003

TILTECO INC.
TILLIT TESTING & ENGINEERING COMPANY
6595 N.W. 36th. St., Ste. 217, VIRGINIA GARDENS, Fl. 33166
Phone : (305)871–1530 . Fax : (305)871–1531
EB–0006719
WALTER A. TILLIT Jr. P. E.
FLORIDA Lic. # 44167

0.050" SOLID BERTHA ALUMINUM STORM PANEL (2.25" DEEP)

EASTERN METAL SUPPLY, INC
9400 TELGE ROAD
HOUSTON, TEXAS 77095

REV. No	DESCRIPTION	DATE	REV. No	DESCRIPTION	DATE
1			3		
2			4		

AS SHOWN
SCALE

1/17/05
DATE

05–012
DRAWING No

SHEET 14 OF 15

+ ALTERNATIVELY, TRACK ④ MAY BE ATTACHED TO HOLLOW CEILING AS PER DETAILS SHOWN ON ALTERNATIVE 9A, SHEET 13 OF 15.

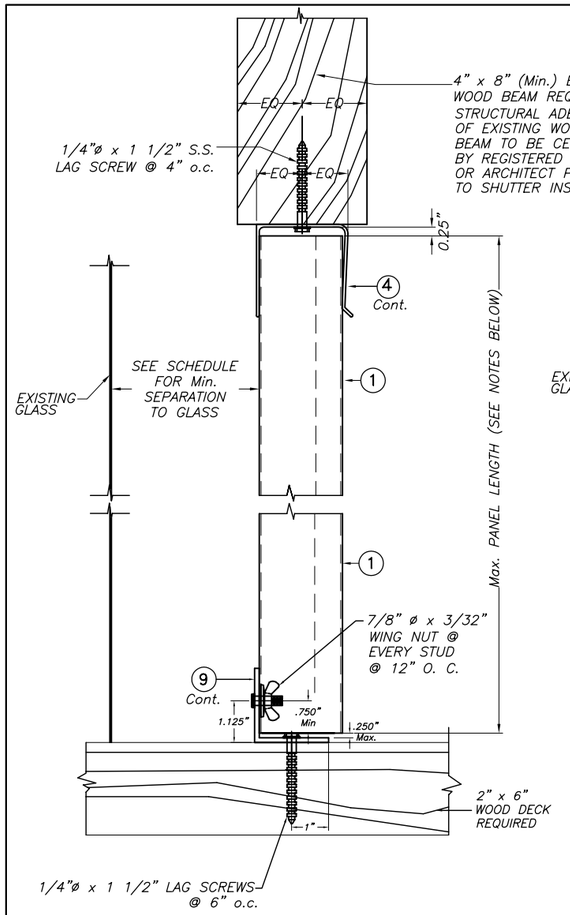

ALTERNATIVE 19A

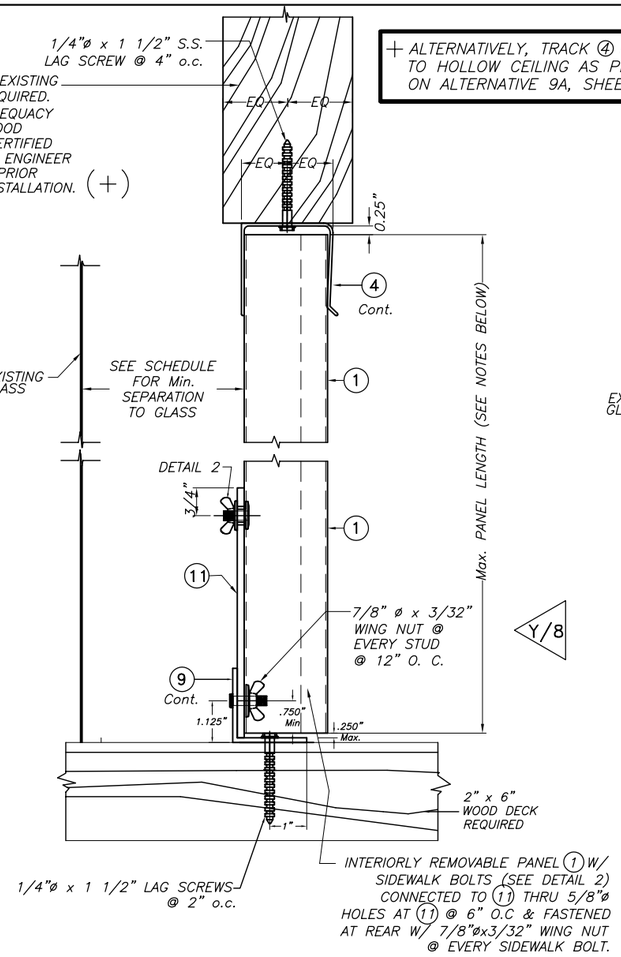

ALTERNATIVE 19B

CEILING & FLOOR MOUNTING INSTALLATIONS
SECTIONS 19
SCALE : 1/4" = 1"

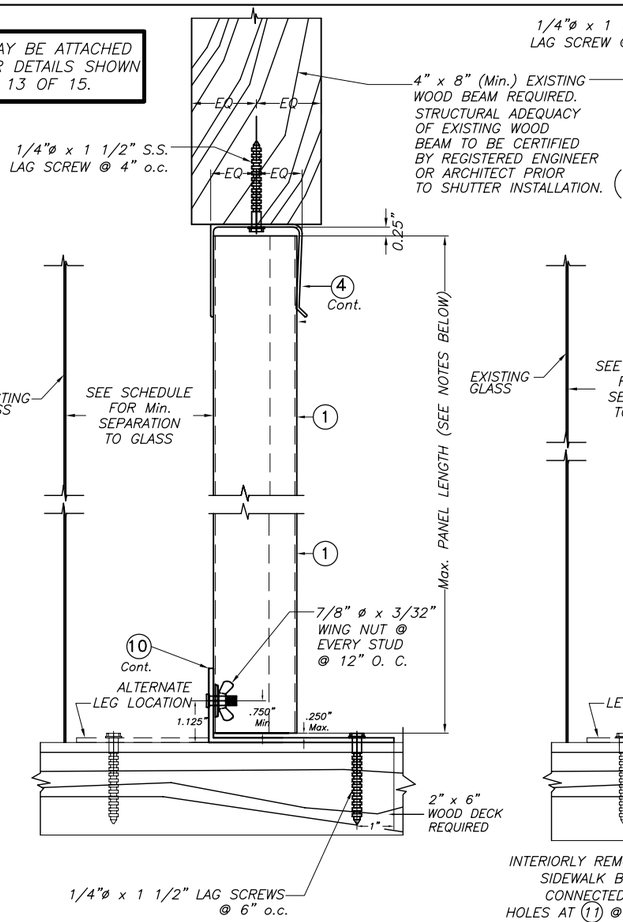

ALTERNATIVE 20A

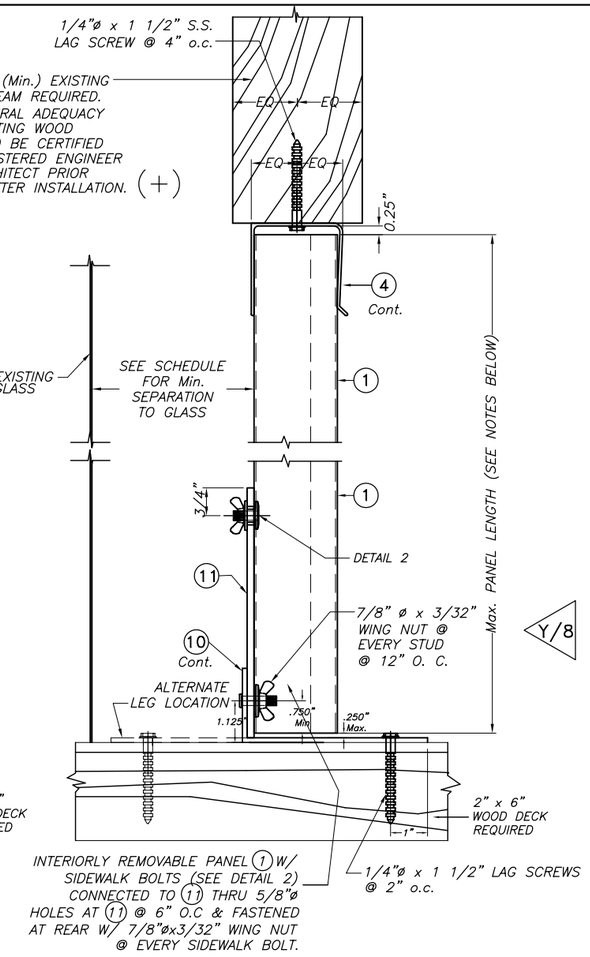

ALTERNATIVE 20B

CEILING & FLOOR MOUNTING INSTALLATIONS
SECTIONS 20
SCALE : 1/4" = 1"

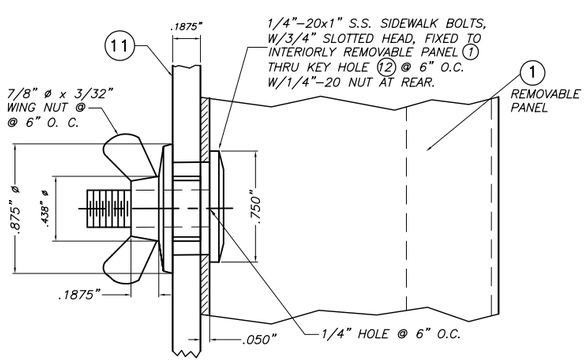

DETAIL 2 – INSTALLATION OF 1/4"x1" SIDEWALK BOLTS @ REMOVABLE PANEL
SCALE: 1" = 1"

NOTE FOR COMBINATION OF SECTIONS:

FLOOR/CEILING MOUNTING SECTIONS CAN BE COMBINED IN ANY WAY TO SUIT ANY INSTALLATION.

INSTALLATION DETAILS ON EXISTING WOOD BUILDINGS

NOTES:

1. INSTALLATIONS ARE ONLY VALID FOR DESIGN WIND LOADS UP TO +65.0, –65.0 psf AND PANEL'S LENGTHS UP TO 9'–0".
2. NEW 2" x 6" P. T. TO BE SOUTHERN PINE No. 2, SURFACED DRY WITH 19 % M. M. C. W/ SPECIFIC DENSITY OF 0.55.
3. FOR NEW WOOD FRAME CONSTRUCTION: WOOD MEMBERS TO BE SOUTHERN PINE No. 2, W/ SPECIFIC DENSITY OF 0.55 OR EQUAL.

T.D.I.–2003

TILTECO INC.
TILLIT TESTING & ENGINEERING COMPANY
6595 N.W. 36th. St., Ste. 217, VIRGINIA GARDENS, Fl. 33166
Phone : (305)871–1530 Fax : (305)871–1531
EB–0006719
WALTER A. TILLIT Jr. P. E.
FLORIDA Lic. # 44167

0.050" SOLID BERTHA ALUMINUM STORM PANEL (2.25" DEEP)

EASTERN METAL SUPPLY, INC
9400 TELGE ROAD
HOUSTON, TEXAS 77095

REV. No	DESCRIPTION	DATE	REV. No	DESCRIPTION	DATE
1			3		
2			4		

AS SHOWN
SCALE

1/17/05
DATE

05–012
DRAWING No

SHEET 15 OF 15