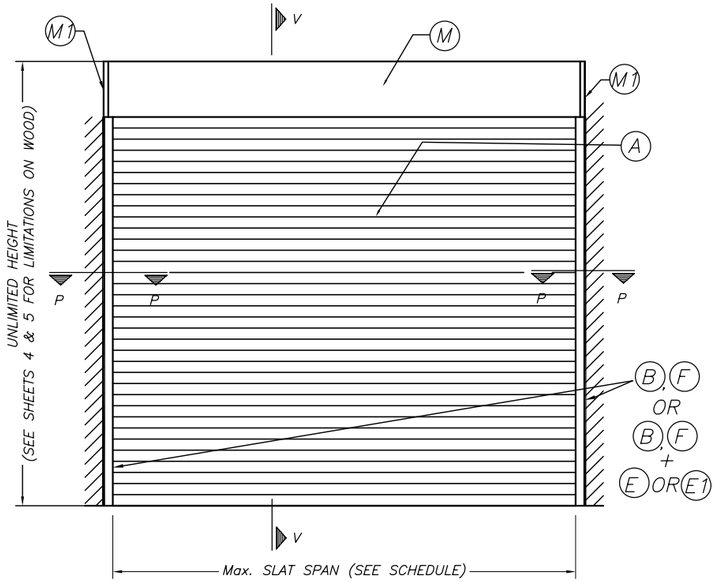

TYPICAL SINGLE UNIT ELEVATION

NOTE: SEE SHEETS 2 & 3 FOR COMPONENTS NOMENCLATURE.

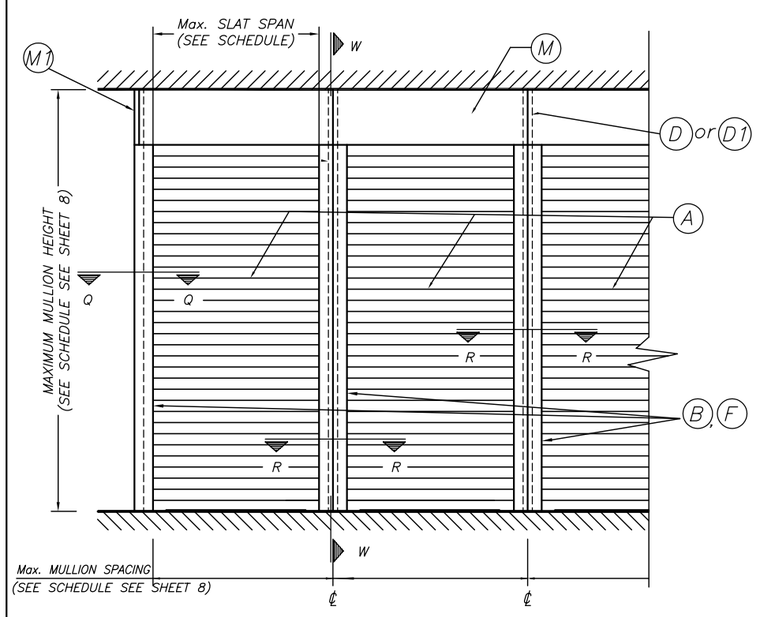

TYPICAL MULTIPLE UNIT ELEVATION

NOTE: SEE SHEETS 2 & 3 FOR COMPONENTS NOMENCLATURE.

NOTES:
(1) SEE SECTIONS ON SHEETS 4 THRU 7
(2) SEE SCHEDULES ON SHEETS 5 & 8

GENERAL NOTES:

1. ROLL UP SHUTTER SHOWN ON THIS PRODUCT EVALUATION DOCUMENT (P.E.D.) HAS BEEN VERIFIED FOR COMPLIANCE IN ACCORDANCE WITH THE 2003 EDITIONS OF THE INTERNATIONAL BUILDING CODE, (I.B.C.) AND INTERNATIONAL RESIDENTIAL CODE, (I.R.C.) WITH THE 2003 TEXAS REVISIONS, EFFECTIVE JANUARY 1, 2005.
ROLL UP SHUTTER SHALL BE INSTALLED AT SEAWARD AND INLAND AREAS, AS DEFINED BY THE TEXAS DEPARTMENT OF INSURANCE.
DESIGN WIND LOADS SHALL BE DETERMINED AS PER SECTION 1609 OF THE INTERNATIONAL BUILDING CODE, FOR A BASIC WIND SPEED AS REQUIRED BY THE JURISDICTION WHERE SHUTTER WILL BE INSTALLED, AND FOR A DIRECTIONALITY FACTOR Kd = 0.85, IN ACCORDANCE WITH ASCE 7–02 STANDARD.
ROLL UP SHUTTER ADEQUACY FOR IMPACT AND CYCLIC RESISTANCE HAS BEEN VERIFIED IN ACCORDANCE WITH SECTIONS 1609.1.4 AND R301.2.1.2 OF THE ABOVE MENTIONED CODES RESPECTIVELY, AS PER ARCHITECTURAL TESTING INC. REPORT # 66443.02–109–18, PER ASTM E 1886, E 1996 AND E 330 STANDARDS, CORRESPONDING TO MISSILE TYPE "D" AND WIND ZONE 4. SEE NOTE * ON SHEET 4 FOR ADDITIONAL LIMITATIONS.
MAXIMUM DESIGN PRESSURE RATING SHALL BE AS INDICATED ON SHEET 5.

2. ALL ALUMINUM EXTRUSIONS SHALL BE MADE OF ALLOYS AND TEMPERS, AS INDICATED ON SHEET 2 OF THIS DRAWING.
THE THICKNESS OF ALL EXTRUSIONS SHALL BE AS SHOWN ON THIS DRAWING WITH STANDARD TOLERANCES IN ACCORDANCE WITH THE "ALUMINUM STANDARDS AND DATA 2002 EDITION". ALUMINUM ASSOCIATION INCORPORATED, WASHINGTON D.C.

3. EVERY OTHER SLAT (INCLUDING BASE SLAT) SHALL INCLUDE ONE RETAIN SCREW (C), AISI 304 SERIES STAINLESS STEEL (SEE SHEET 2).

4. ALL SCREWS (EXCEPT COMPONENT # (C)) TO BE STAINLESS STEEL 304 OR 316 AISI SERIES OR ITW BUILDEX CORROSION RESISTANT COATED CARBON STEEL TEK SCREWS, AS PER DIN 50018.

5. ALL SCREWS AND BOLTS INSTALLED AT INLAND I AREAS TO BE STAINLESS STEEL 304 OR 316 AISI SERIES AND MEET ASTM A167, OR HOT DIPPED GALVANIZED (AFTER FABRICATION) CARBON STEEL AS PER ASTM A123 OR ASTM A153, OR HOT DIPPED GALVANIZED OR GALVANNEALED (PRIOR TO FABRICATION) AND MEET ASTM A653; HOT DIP GALVANIZED OR ELECTRO GALVANIZED PER ASTM A641, MECHANICALLY DEPOSITED ZINC COATINGS PER ASTM B695 OR ELECTRO DEPOSITED ZINC COATINGS PER ASTM B633, PER THE 2003 TEXAS REVISIONS TO SECTION 1716.1.2 OF THE 2003 I.B.C. AND TO SECTION R324.1.2. OF THE 2003 I.R.C

6. ANCHORS TO WALL FOR SIDE RAILS CONNECTION SHALL BE AS FOLLOWS:

(A) TO EXISTING POURED CONCRETE (MIN. f'c = 2899 psi) OR GROUT FILLED CELL ASTM C–90 CONCRETE BLOCK:
– 5/16"Ø TAPCON XL ANCHORS, AS MANUFACTURED BY ITW/BUILDEX, INC.

NOTES:
A.1) MINIMUM EMBEDMENT OF ANCHORS INTO POURED CONCRETE OR GROUT FILLED CELL CONCRETE BLOCK IS 2 1/4". NO EMBEDMENT INTO STUCCO SHALL BE CONSIDERED AS PART OF THE REQUIRED EMBEDMENT.

A.2) IN CASE THAT PRECAST STONE, PRECAST CONCRETE OR BRICK PANELS, VENEER OR PAVERS BE FOUND ON THE EXISTING WALL ,ANCHORS SHALL BE LONG ENOUGH TO REACH THE MAIN SUBSTRATE BEHIND SUCH PANELS. MINIMUM EMBEDMENT SHALL BE AS INDICATED ON NOTE A.1 ABOVE.

(B) TO EXISTING WOOD FRAME WALL: MIN. SPECIFIC GRAVITY G = 0.46 OR G = 0.55 (SEE SCHEDULE)
– #14 (0.242" O.D.) N.D.S. WOOD SCREWS.

NOTES:
B.1) MINIMUM EMBEDMENT OF ANCHORS INTO WOOD STUDS SHALL BE 3".

B.2) IN CASE THAT PRECAST STONE, PRECAST CONCRETE OR BRICK PANELS, VENEER OR PAVERS BE FOUND ON THE EXISTING WALL, ANCHORS SHALL BE LONG ENOUGH TO REACH THE MAIN SUBSTRATE BEHIND SUCH PANELS. MINIMUM EMBEDMENT SHALL BE AS INDICATED ON NOTE B.1 ABOVE.

(C) ANCHORS SHALL BE INSTALLED FOLLOWING ALL OF THE RECOMMENDATIONS AND SPECIFICATIONS OF THE ANCHOR'S MANUFACTURER.

(D) ANCHORS REQUIRED FOR MULLION CONNECTIONS SHALL BE AS SPECIFIED ON APPLICABLE SECTIONS SHOWN ON SHEETS 6 & 7.
POWER BOLT ANCHORS TO BE AS MANUFACTURED BY POWERS FASTENERS, INC., HILTI KWIK BOLT 3 ANCHORS TO BE AS MANUFACTURED BY HILTI, INC. MINIMUM EMBEDMENTS AND EDGE DISTANCES SHALL EXCLUDE ANY WALL/FLOOR/CEILING FINISH.

7. IT SHALL BE THE RESPONSIBILITY OF THE CONTRACTOR TO VERIFY THE SOUNDNESS OF THE STRUCTURE WHERE SHUTTER IS TO BE ATTACHED TO INSURE PROPER ANCHORAGE.
THIS SHUTTER SHALL ONLY BE ATTACHED TO POURED CONCRETE ,GROUT FILLED CELL CONCRETE BLOCK, AND WOOD FRAME BUILDINGS.

8. THE INSTALLATION CONTRACTOR IS TO SEAL/CAULK ALL SHUTTER COMPONENT EDGES WHICH REMAIN IN CONTINUOUS CONTACT WITH THE BUILDING TO PREVENT WIND/RAIN INTRUSION.

9. ROLL–UP MECHANISM NOT PART OF THIS APPROVAL, BUT SHALL BE CERTIFIED BY AN INDEPENDENT TESTING AGENCY.

10. ROLL–UP SHUTTER INSTALLATION SHALL COMPLY WITH SPECS INDICATED IN THIS DRAWING PLUS ANY BUILDING AND ZONING REGULATIONS PROVIDED BY THE JURISDICTION WHERE PERMIT IS APPLIED TO.

11. (a) THIS PRODUCT EVALUATION DOCUMENT (P.E.D.) PREPARED BY THIS ENGINEER IS GENERIC AND DOES NOT PROVIDE INFORMATION FOR A SITE SPECIFIC PROJECT; i. e. WHERE THE SITE CONDITIONS DEVIATE FROM THE P.E.D.

(b) CONTRACTOR TO BE RESPONSIBLE FOR THE SELECTION, PURCHASE AND INSTALLATION INCLUDING LIFE SAFETY OF THIS PRODUCT, BASED ON THIS PRODUCT EVALUATION DOCUMENT, PROVIDED HE/SHE DOES NOT DEVIATE FROM THE CONDITIONS DETAILED ON THIS DOCUMENT. CONSTRUCTION SAFETY AT SITE IS THE CONTRACTOR'S RESPONSIBILITY.

(c) THIS PRODUCT EVALUATION DOCUMENT WILL BE CONSIDERED INVALID IF ALTERED BY ANY MEANS.

(d) SITE SPECIFIC PROJECTS SHALL BE PREPARED BY A PROFESSIONAL ENGINEER OR ARCHITECT WHICH WILL BECOME THE ENGINEER OF RECORD (E.O.R.) FOR THE PROJECT AND WHO WILL BE RESPONSIBLE FOR THE PROPER USE OF THE P.E.D. ENGINEER OF RECORD, ACTING AS A DELEGATED ENGINEER TO THE P.E.D. ENGINEER, SHALL SUBMIT TO THIS LATTER THE SITE SPECIFIC DRAWINGS FOR REVIEW.

(e) THIS P.E.D. SHALL BEAR THE DATE AND ORIGINAL SEAL AND SIGNATURE OF THE PROFESSIONAL ENGINEER OF RECORD THAT PREPARED IT.

T.D.I. 2003

© 2006 TILTECO INC.

TILTECO INC.
TILLIT TESTING & ENGINEERING COMPANY
6355 N.W. 36th. St., Ste. 305, VIRGINIA GARDENS, Fl. 33166
Phone : (305)871–1530 . Fax : (305)871–1531
e–mail: tilteco@aol.com
EB–0006719
WALTER A. TILLIT Jr. P. E.
FLORIDA Lic. # 44167

BARRACUDA END RETENTION
ROLL–UP SHUTTER SYSTEM

ALUTECH UNITED INC.
15 DIXON STREET
SELBYVILLE, DE 19975

REV. No	DESCRIPTION	DATE	REV. No	DESCRIPTION	DATE
1			3		
2			4		

DRAWN BY F.P.
05/01/07 DATE
07–117 DRAWING No
SHEET 1 OF 8

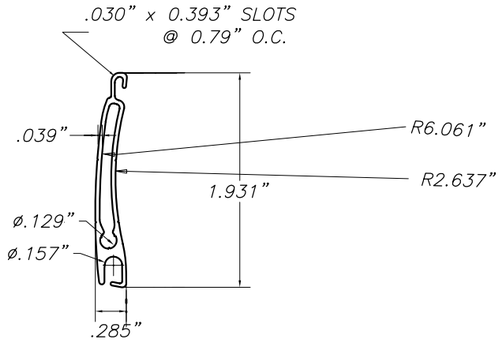

(A) SLAT

6063–T6 ALUMINUM ALLOY
SCALE: 3/4"= 1"

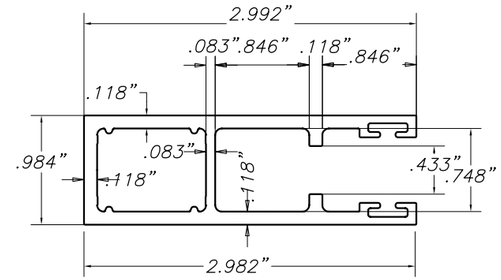

(B) SIDE RAIL

6063–T6 ALUMINUM ALLOY
SCALE: 3/4" = 1"

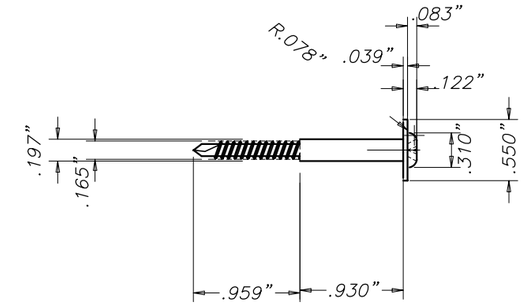

(C) RETAIN SCREW

(1 EVERY OTHER SLAT INCLUDING BASE SLAT
AND SHALL BE INSTALLED W/A 0.576" MIN. SLIP AS SHOWN ON SECTIONS)
AISI/SAE 304 SERIES STAINLESS STEEL
SCALE: 3/4" = 1"

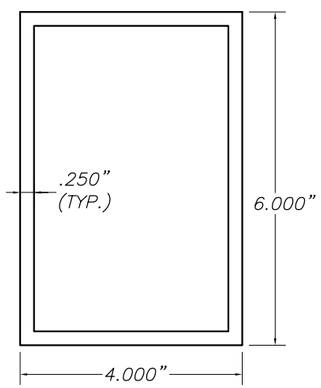

(D) 4"x6" MULLION:

6063–T6 ALUMINUM ALLOY
SCALE: 3/8" = 1"

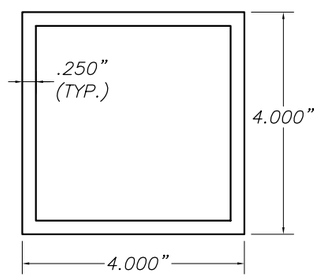

(D1) 4"x4" MULLION:

6063–T6 ALUMINUM ALLOY
SCALE: 3/8" = 1"

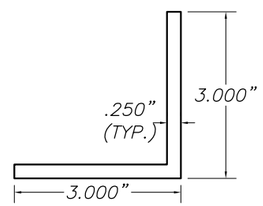

(E) 3"x3"x1/4" INSIDE MOUNT ANGLE

6061–T6 ALUMINUM ALLOY
SCALE: 3/8" = 1"

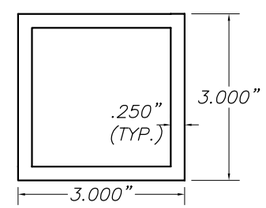

(E1) 3"x3"x1/4" OPTIONAL INSIDE MOUNT TUBE

6061–T6 ALUMINUM ALLOY
SCALE: 3/8" = 1"

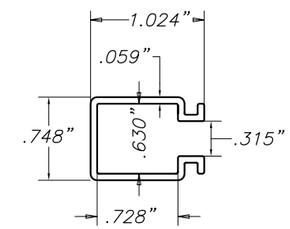

(F) END RETENTION CAP

PA–PO ORGALLOY

RETAIN SCREW ENCASEMENT
DENSITY = 0.970 (ASTM D792)
TENSILE STRENGTH = 5400 PSI (ASTM D638)
FLEXURAL MODULUS = 200,000 PSI (ASTM D790)
FLEXURAL STRENGTH = 6300 PSI (ASTM D790)
SCALE: 3/4" = 1"

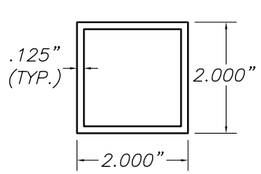

(G) BUILD-OUT TUBE

6061–T6 ALUMINUM ALLOY
SCALE: 3/8" = 1"

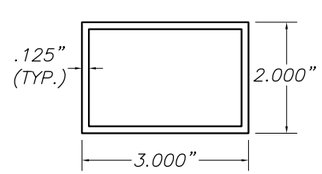

(G1) ALTERNATE BUILD-OUT TUBE

6061–T6 ALUMINUM ALLOY
SCALE: 3/8" = 1"

COMPONENTS

T.D.I. 2003

© 2006 TILTECO INC.

TILTECO INC.
TILLIT TESTING & ENGINEERING COMPANY
6355 N.W. 36th. St., Ste. 305, VIRGINIA GARDENS, Fl. 33166
Phone : (305)871–1530 . Fax : (305)871–1531
e–mail: tilteco@aol.com
EB–0006719
WALTER A. TILLIT Jr. P. E.
FLORIDA Lic. # 44167

BARRACUDA END RETENTION
ROLL–UP SHUTTER SYSTEM

ALUTECH UNITED INC.
15 DIXON STREET
SELBYVILLE, DE 19975

REV. No	DESCRIPTION	DATE	REV. No	DESCRIPTION	DATE
1			3		
2			4		

DRAWN BY F.P.
05/01/07 DATE
07–117 DRAWING No
SHEET 2 OF 8

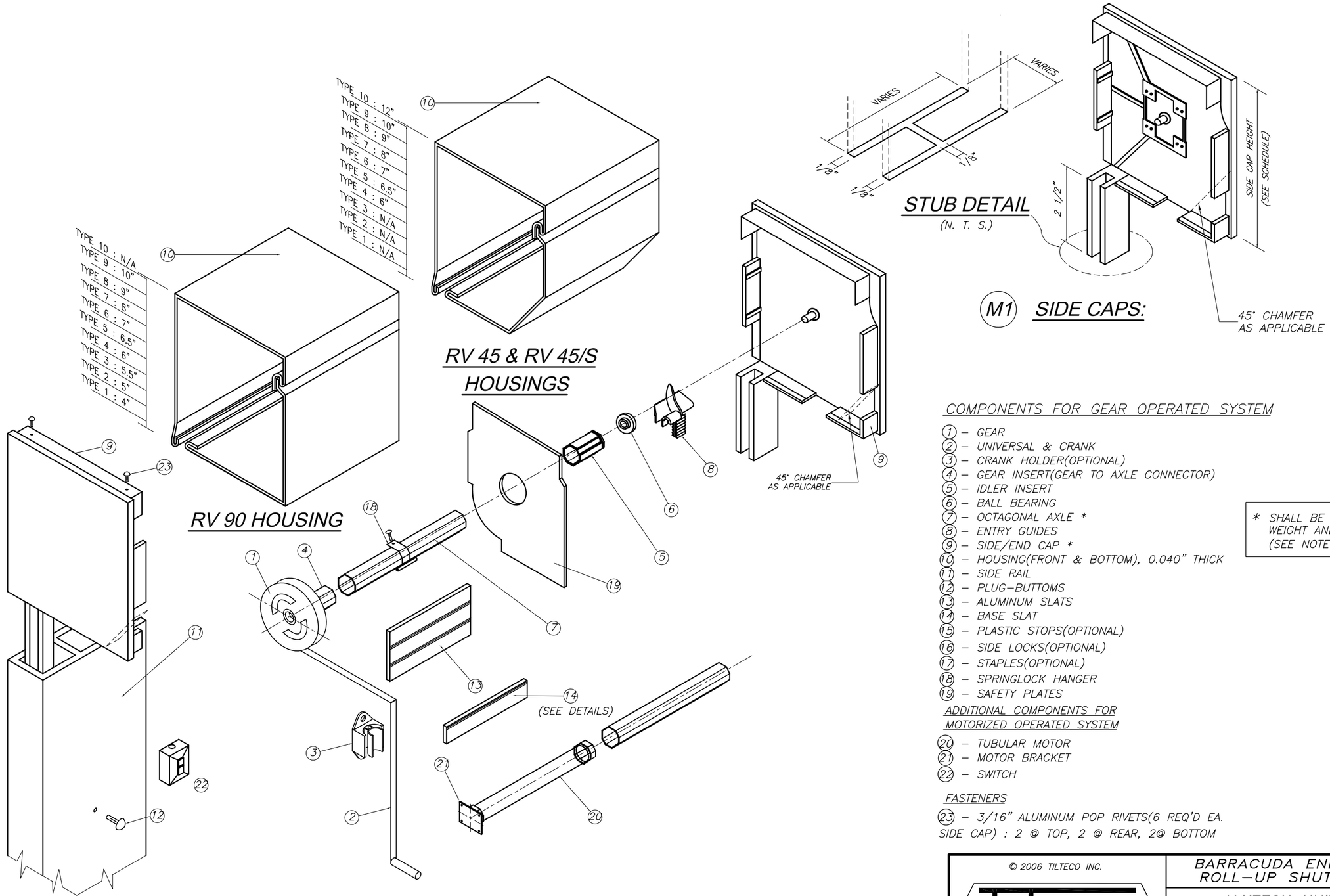

COMPONENTS FOR GEAR OPERATED SYSTEM

1 – GEAR
2 – UNIVERSAL & CRANK
3 – CRANK HOLDER(OPTIONAL)
4 – GEAR INSERT(GEAR TO AXLE CONNECTOR)
5 – IDLER INSERT
6 – BALL BEARING
7 – OCTAGONAL AXLE *
8 – ENTRY GUIDES
9 – SIDE/END CAP *
10 – HOUSING(FRONT & BOTTOM), 0.040" THICK
11 – SIDE RAIL
12 – PLUG–BUTTOMS
13 – ALUMINUM SLATS
14 – BASE SLAT
15 – PLASTIC STOPS(OPTIONAL)
16 – SIDE LOCKS(OPTIONAL)
17 – STAPLES(OPTIONAL)
18 – SPRINGLOCK HANGER
19 – SAFETY PLATES

ADDITIONAL COMPONENTS FOR MOTORIZED OPERATED SYSTEM

20 – TUBULAR MOTOR
21 – MOTOR BRACKET
22 – SWITCH

FASTENERS

23 – 3/16" ALUMINUM POP RIVETS(6 REQ'D EA. SIDE CAP) : 2 @ TOP, 2 @ REAR, 2@ BOTTOM

* SHALL BE CAPABLE TO SUSTAIN SLAT'S WEIGHT AND ASSURE LIFTING MECHANISM (SEE NOTE 9/1)

T.D.I. 2003

© 2006 TILTECO INC.

TILTECO INC.
TILLIT TESTING & ENGINEERING COMPANY
6355 N.W. 36th. St., Ste. 305, VIRGINIA GARDENS, Fl. 33166
Phone : (305)871–1530 . Fax : (305)871–1531
e–mail: tilteco@aol.com
EB–0006719
WALTER A. TILLIT Jr. P. E.
FLORIDA Lic. # 44167

BARRACUDA END RETENTION ROLL–UP SHUTTER SYSTEM

ALUTECH UNITED INC.
15 DIXON STREET
SELBYVILLE, DE 19975

REV. No	DESCRIPTION	DATE	REV. No	DESCRIPTION	DATE
1			3		
2			4		

DRAWN BY F.P.
05/01/07 DATE
07–117 DRAWING No
SHEET 3 OF 8

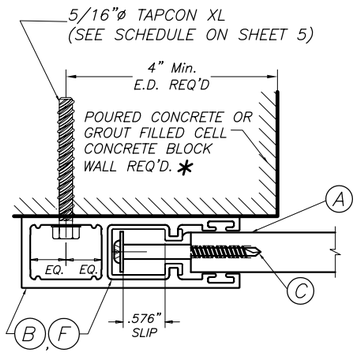

SECTION P-P (1): WALL MOUNT

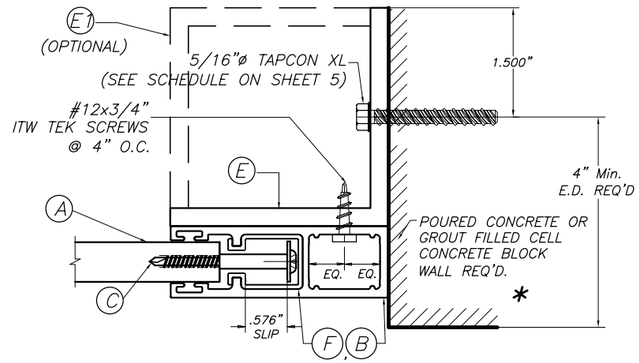

SECTION P-P (2): INSIDE MOUNT

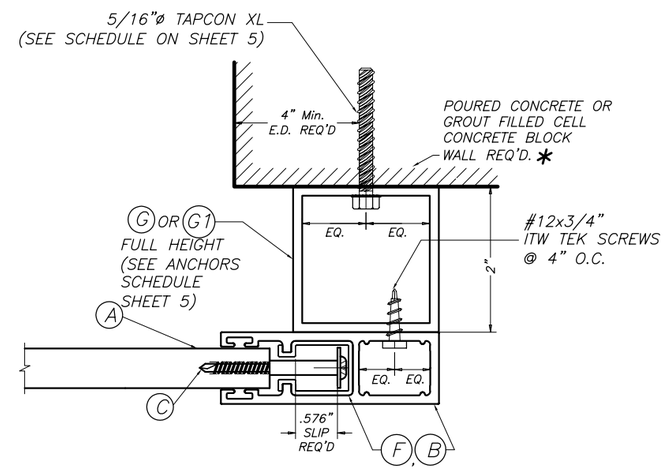

SECTION P-P (3): BUILD-OUT

* NOTE:
IT SHALL BE THE RESPONSIBILITY OF THE CONTRACTOR TO VERIFY THAT EXISTING STRUCTURE IS DESIGNED TO SUPPORT **Vx=971 Lb/FT** AND Vy=1/2xDESIGN LOAD(psf)xSHUTTER SPAN(ft) FORCES PER UNIT FOOT OF SHUTTER HEIGHT AT BOTH JAMBS.

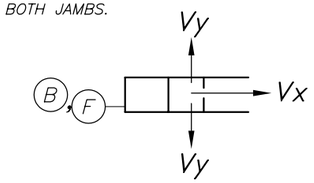

SIDE RAIL CONNECTIONS

TO POURED CONCRETE OR GROUT FILLED CELL CONCRETE BLOCK WALL

(SEE MAX. SLAT SPAN SCHEDULE ON SHEET 5)

SCALE : 3/8" = 1"

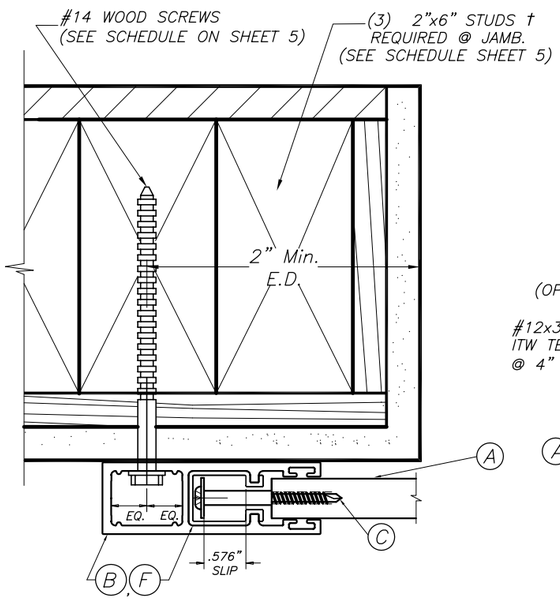

SECTION P-P (1): WALL MOUNT

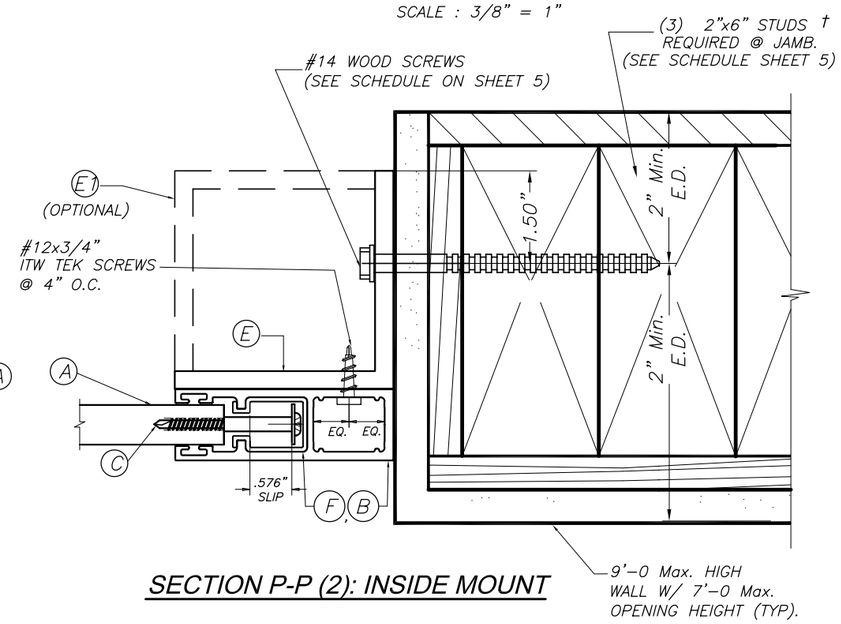

SECTION P-P (2): INSIDE MOUNT

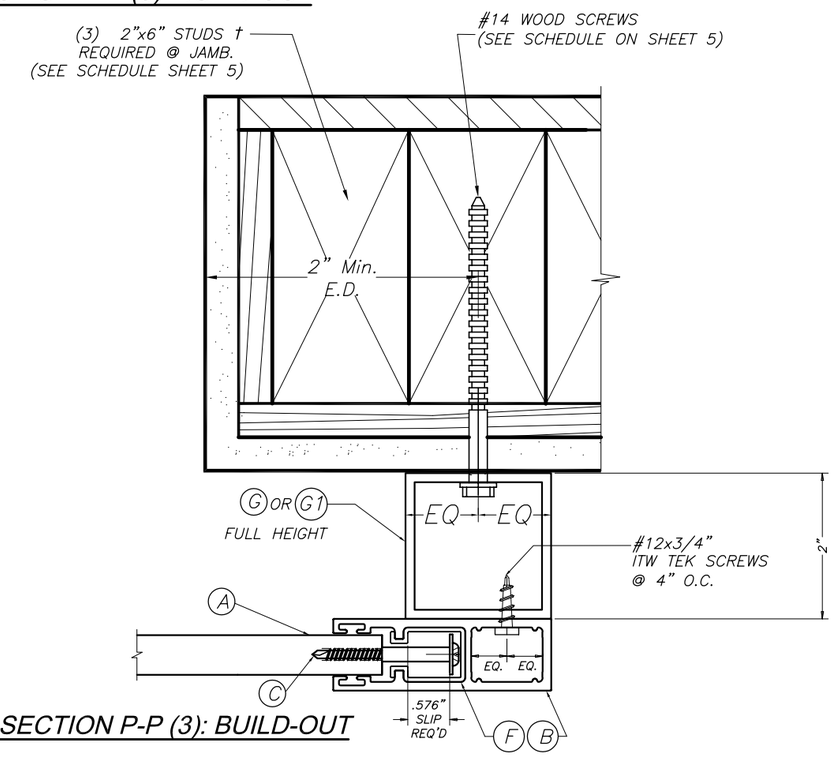

SECTION P-P (3): BUILD-OUT

† MULTIPLE STUDS TO BE FASTENED TO EACH OTHER W/ 2-#14X3" F.H. WOOD SCREWS @ 4" O.C. FULL HEIGHT, FOLLOWING A SEQUENCE FROM FIRST TO LAST STUD. ALTERNATIVELY, USE 1/2"ø THRU BOLTS @ 8" O.C W/ NUT & WASHER FROM FIRST TO LAST STUD.
CONNECTION OF MULTIPLE STUDS TOP & BOTTOM SHALL RESIST A HORIZONTAL REACTION OF 1600 LB. DESIGN OF THIS CONNECTION IS BY PROFESSIONAL OF RECORD FOR THE STRUCTURE.

SIDE RAIL CONNECTIONS

TO WOOD FRAME WALL

(SEE MAX. SLAT SPAN SCHEDULE ON SHEET 5)

SCALE : 3/8" = 1"

T.D.I. 2003

© 2006 TILTECO INC.

TILTECO INC.
TILLIT TESTING & ENGINEERING COMPANY
6355 N.W. 36th. St., Ste. 305, VIRGINIA GARDENS, Fl. 33166
Phone : (305)871-1530 . Fax : (305)871-1531
e-mail: tilteco@aol.com
EB-0006719
WALTER A. TILLIT Jr. P. E.
FLORIDA Lic. # 44167

BARRACUDA END RETENTION
ROLL-UP SHUTTER SYSTEM

ALUTECH UNITED INC.

15 DIXON STREET
SELBYVILLE, DE 19975

REV. No	DESCRIPTION	DATE	REV. No	DESCRIPTION	DATE
1			3		
2			4		

DRAWN BY F.P.

05/01/07 DATE

07-117 DRAWING No

SHEET 4 OF 8

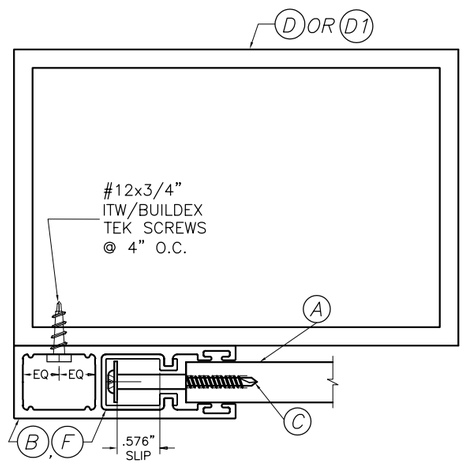

SECTION Q-Q (1): (END MULLION)
FACE MOUNT (MULLION ORIENTATION # 1)

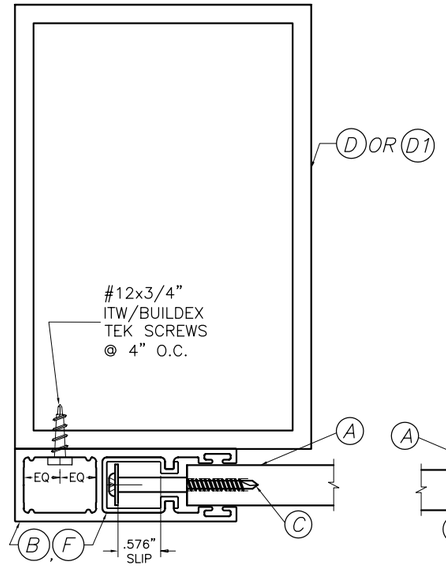

SECTION Q-Q (1): (END MULLION)
FACE MOUNT (MULLION ORIENTATION # 2)

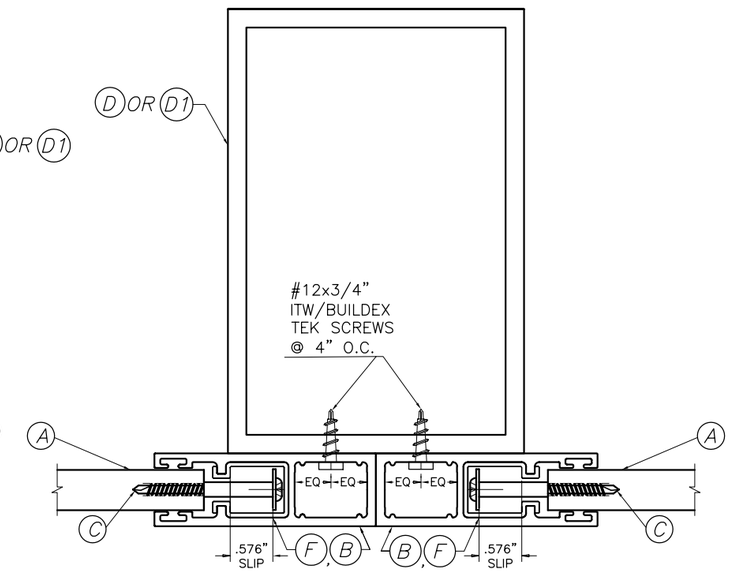

SECTION R-R (1): (INTERIOR MULLION)
FACE MOUNT (MULLION ORIENTATION # 2)

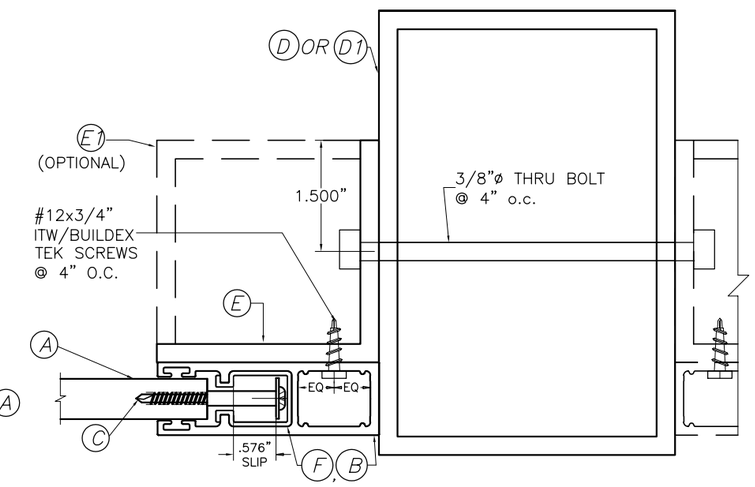

SECTION Q-Q (3): (END OR INTERIOR MULLION)
INSIDE MOUNT(MULLION ORIENTATION # 1 OR 2 AS APPLICABLE)

MAXIMUM ANCHOR SPACING SCHEDULE FOR INSTALLATIONS INTO CONCRETE OR GROUT FILLED CONCRETE BLOCK.

DESIGN LOAD (P.S.F)	SPAN L (ft)	WALL MOUNTING		TRAPPED MOUNTING		BUILD-OUT MOUNTING	
		POURED CONCRETE	GROUT FILLED BLOCK	POURED CONCRETE	GROUT FILLED BLOCK	POURED CONCRETE	GROUT FILLED BLOCK
+45, −45	≤ 6'-0"	4"	4"	4"	4"	4"	4"
	>6'-0" TO 7'-0"	4"	4"	4"	4"	4"	4"
	>7'-0" TO 12'-0"	4"	4"	4"	4"	◊ 3 3/4"	◊ 3 3/4"
+50, −50	≤ 6'-0"	4"	4"	4"	4"	4"	4"
	>6'-0" TO 7'-0"	4"	4"	4"	4"	4"	4"

◊ REQUIRES INSTALLATION TO BE PERFORMED ONLY W/ (G1) (2"x3"x1/8") B.O. TUBE.

MAXIMUM ANCHOR SPACING SCHEDULE FOR INSTALLATIONS INTO WOOD FRAME BUILDINGS.

DESIGN LOAD (P.S.F)	SPAN L (ft)	WALL MOUNTING		TRAPPED MOUNTING		BUILD-OUT MOUNTING	
		G=0.46	G=0.55	G=0.46	G=0.46	G=0.46	G=0.55
+45, −45	≤ 6'-0"	4"	4"	4"	4"	4"	4"
	>6'-0" TO 7'-0"	4"	4"	4"	4"	4"	4"
	>7'-0" TO 12'-0"	3"	3 1/2"	4"	4"	□ 2 1/2"	3 1/2"
+50, −50	≤ 6'-0"	4"	4"	4"	4"	4"	4"
	>6'-0" TO 7'-0"	4"	4"	4"	4"	4"	4"

□ ALTERNATIVELY, MAX. SPACING MAY BE 3" o.c. IF B.O. TUBE (G1) (2"x3"x1/8") IS USED IN LIEU OF (G) (2"x2"x1/8").

SIDE RAIL CONNECTIONS TO MULLIONS

(SEE SLAT SPAN SCHEDULE)

SCALE: 3/8" = 1"

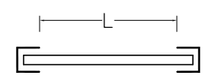

SLAT SPAN DEFINITION

MAXIMUM SLAT SPAN "L" (ft) SCHEDULE.

DESIGN LOAD (P.S.F)	REQUIRED SUBSTATE	MAX. SPAN "L" (FT.)	REMARKS
+45, −45	POURED CONCRETE OR GROUT FILLED CONC. BLOCK.	12'−0"	SEE NOTE * ON SHEET 4
	WOOD	12'−0"	LIMITED TO SHUTTER HGT (W/O BOX) UP TO 54" †
+50, −50	POURED CONCRETE OR GROUT FILLED CONC. BLOCK.	7'−0"	SEE NOTE * ON SHEET 4
	WOOD	7'−0"	LIMITED TO SHUTTER HGT (W/O BOX) UP TO 84"

† FOR SHUTTER HEIGHTS LARGER THAN 54", SPECIAL AND SITE SPECIFIC ENGINEERING WILL BE REQUIRED TO DETERMINE THE REQUIRED NUMBER OF WOOD STUDS AT EACH JAMB, WHICH WILL EXCEED (3) STUDS.

T.D.I. 2003

© 2006 TILTECO INC.

TILTECO INC.
TILLIT TESTING & ENGINEERING COMPANY
6355 N.W. 36th. St., Ste. 305, VIRGINIA GARDENS, Fl. 33166
Phone : (305)871−1530 . Fax : (305)871−1531
e−mail: tilteco@aol.com
EB−0006719
WALTER A. TILLIT Jr. P. E.
FLORIDA Lic. # 44167

BARRACUDA END RETENTION ROLL−UP SHUTTER SYSTEM

ALUTECH UNITED INC.
15 DIXON STREET
SELBYVILLE, DE 19975

REV. No	DESCRIPTION	DATE	REV. No	DESCRIPTION	DATE
1			3		
2			4		

DRAWN BY F.P.

05/01/07 DATE

07−117 DRAWING No

SHEET 5 OF 8

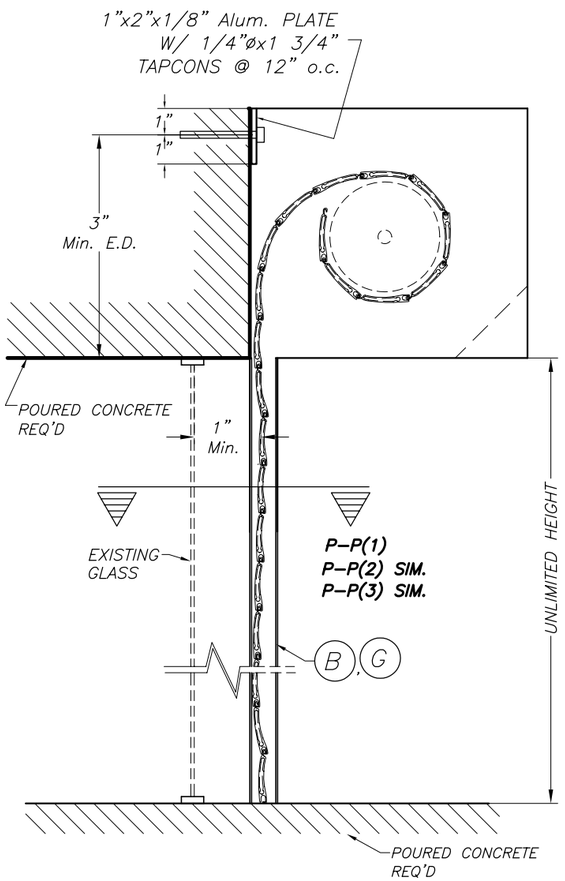

WALL MOUNTING: NO MULLION CASE
SECTION V-V

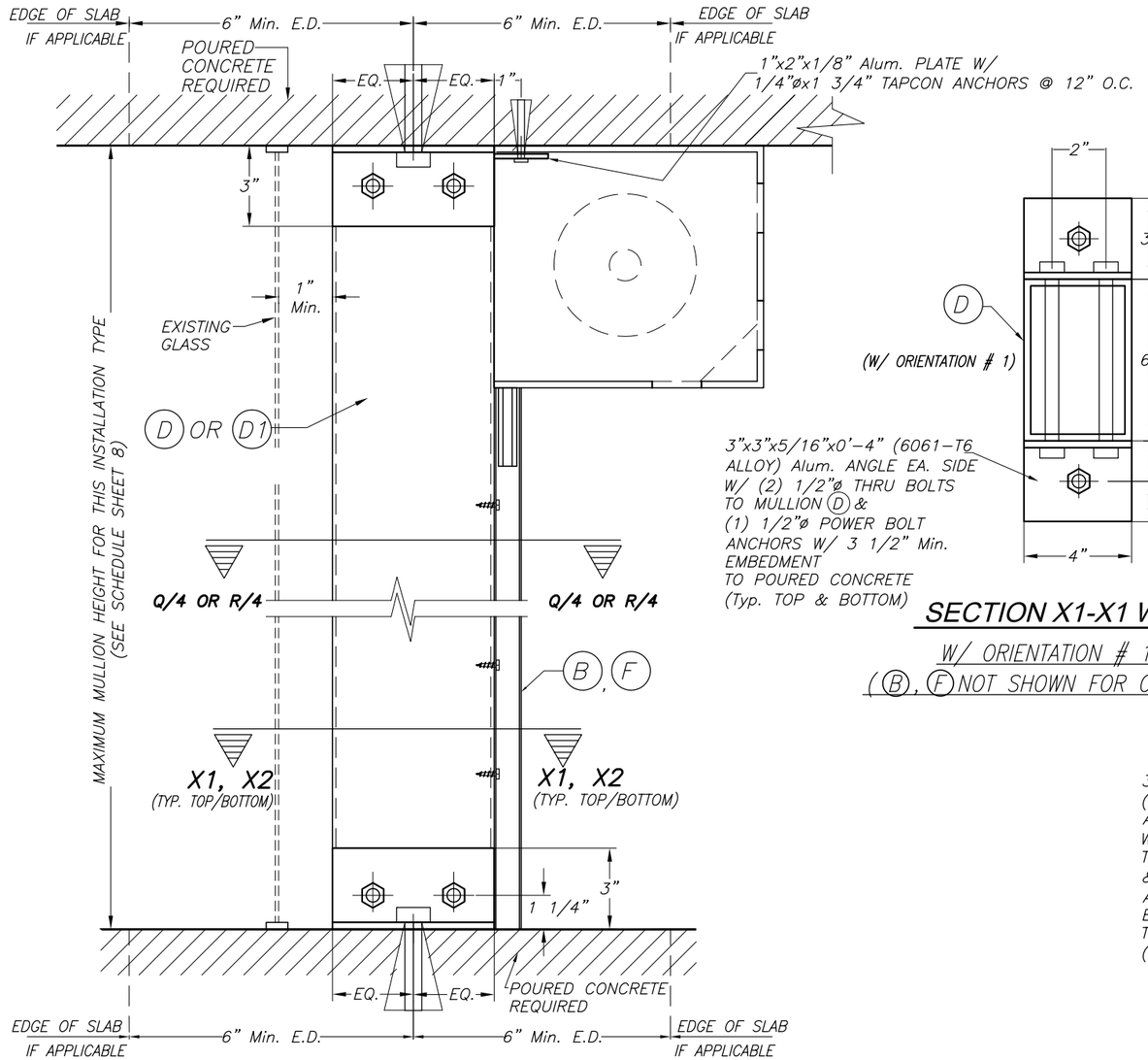

TRAPPED MOUNTING : MULLION D OR D1
SECTION W-W

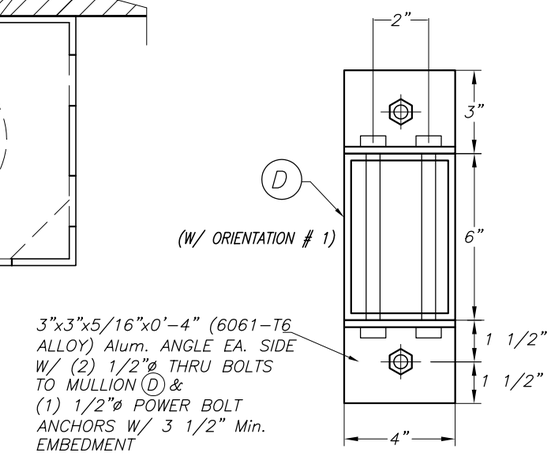

SECTION X1-X1 W/D
W/ ORIENTATION # 1
(B, F NOT SHOWN FOR CLARITY)

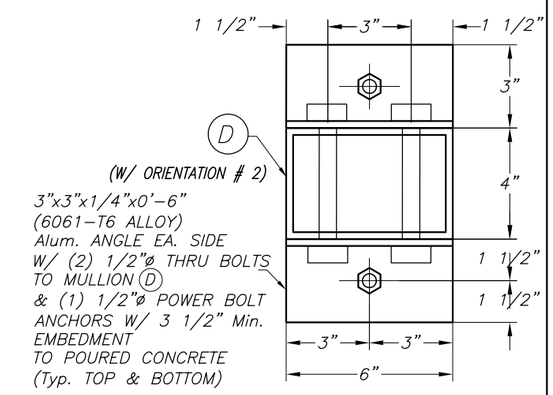

ALTERNATIVE SECTION X1-X1 W/D
W/ ORIENTATION # 2
(B, F NOT SHOWN FOR CLARITY)

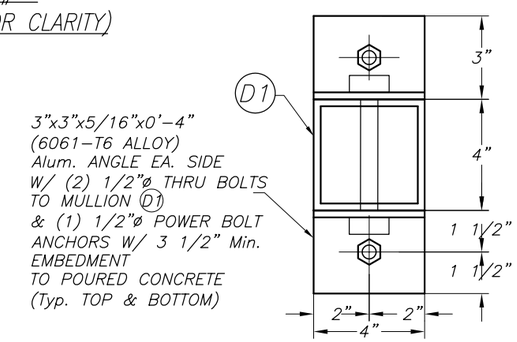

SECTION X2-X2 W/D1
(B, F NOT SHOWN FOR CLARITY)

END & INTERIOR TRAPPED MOUNTED MULLION INSTALLATION

SCALE: 3/16" = 1"

T.D.I. 2003

© 2006 TILTECO INC.

TILTECO INC.
TILLIT TESTING & ENGINEERING COMPANY
6355 N.W. 36th. St., Ste. 305, VIRGINIA GARDENS, Fl. 33166
Phone : (305)871-1530 . Fax : (305)871-1531
e-mail: tilteco@aol.com
EB-0006719
WALTER A. TILLIT Jr. P. E.
FLORIDA Lic. # 44167

BARRACUDA END RETENTION
ROLL-UP SHUTTER SYSTEM

ALUTECH UNITED INC.
15 DIXON STREET
SELBYVILLE, DE 19975

REV. No	DESCRIPTION	DATE	REV. No	DESCRIPTION	DATE
1			3		
2			4		

DRAWN BY F.P.
05/01/07 DATE
07-117 DRAWING No
SHEET 6 OF 8

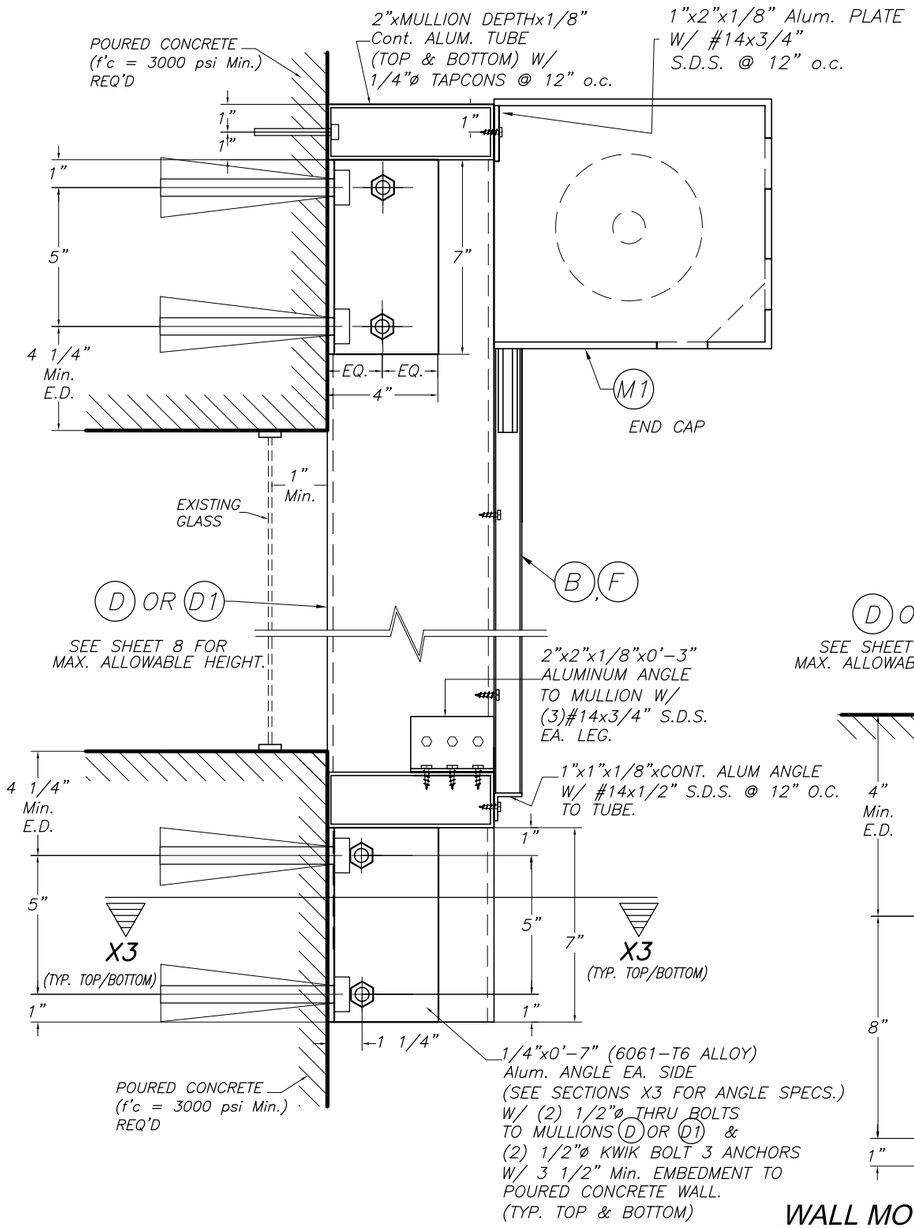

WALL MOUNTING : MULLION D OR D1
POURED CONCRETE WALL
SECTION W-W

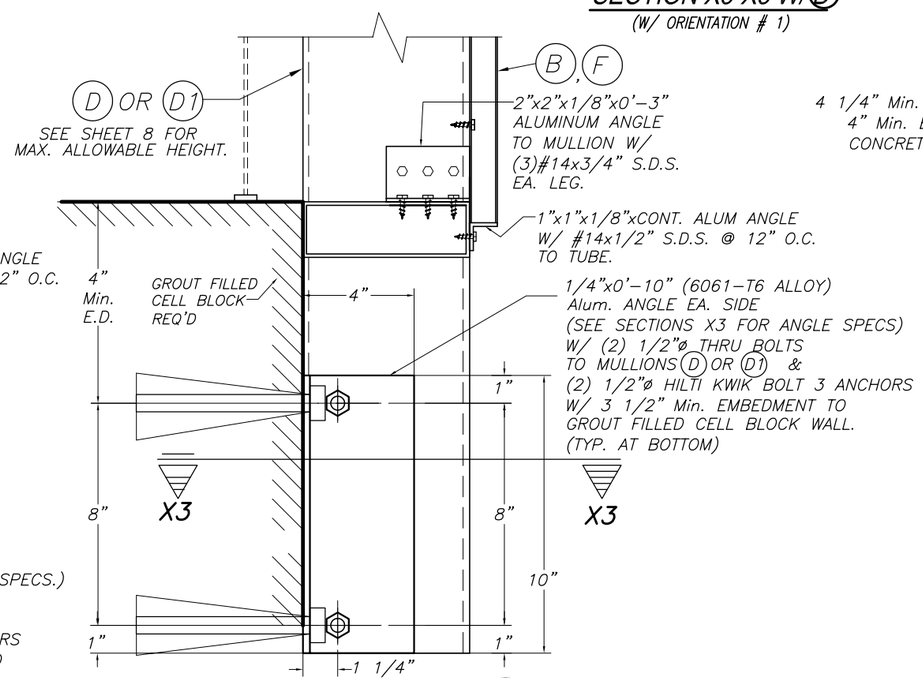

WALL MOUNTING : MULLION D OR D1
GROUT FILLED CELL CONCRETE BLOCK WALL
SECTION W-W

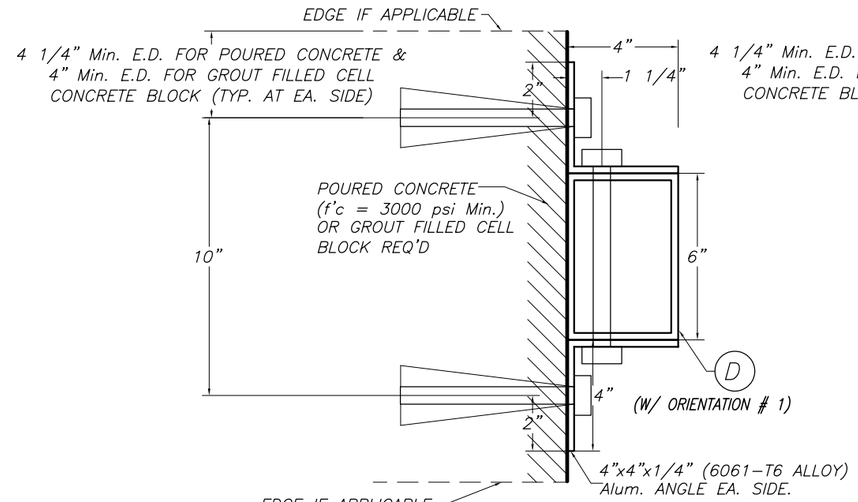

SECTION X3-X3 W/D
(W/ ORIENTATION # 1)

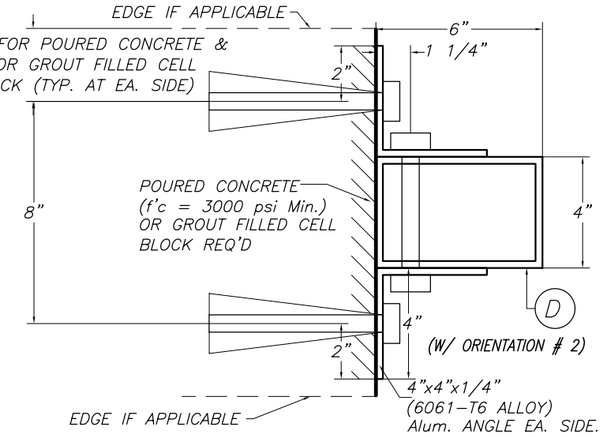

ALTERNATIVE SECTION X3-X3 W/D
(W/ ORIENTATION # 2)

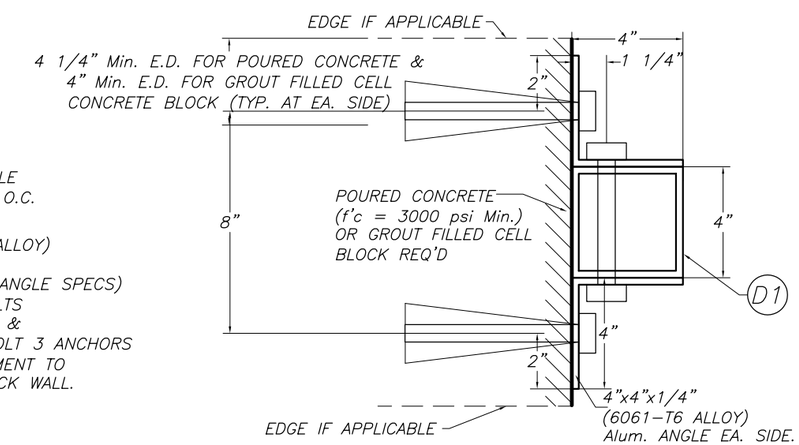

SECTION X3-X3 W/D1
N.T.S.

END & INTERIOR WALL MOUNTED MULLION INSTALLATIONS
SCALE: 3/16"= 1"

T.D.I. 2003

© 2006 TILTECO INC.

TILTECO INC.
TILLIT TESTING & ENGINEERING COMPANY
6355 N.W. 36th. St., Ste. 305, VIRGINIA GARDENS, Fl. 33166
Phone : (305)871-1530 . Fax : (305)871-1531
e-mail: tilteco@aol.com
EB-0006719
WALTER A. TILLIT Jr. P. E.
FLORIDA Lic. # 44167

BARRACUDA END RETENTION ROLL-UP SHUTTER SYSTEM

ALUTECH UNITED INC.
15 DIXON STREET
SELBYVILLE, DE 19975

REV. No	DESCRIPTION	DATE	REV. No	DESCRIPTION	DATE
1			3		
2			4		

DRAWN BY F.P.
05/01/07 DATE
07-117 DRAWING No
SHEET 7 OF 8

MAXIMUM MULLION HEIGHT (Ft) SCHEDULE FOR A GIVEN MAXIMUM DESIGN LOAD "W" (psf), MULLION SPACING (Ft), TYPE OF MULLION AND 0.576" SLIP (in)

MULLION SPACING (ft) / DESIGN LOAD (p.s.f.)	TRAPPED MULLIONS									WALL MOUNTED MULLIONS (CONCRETE / GROUT FILLED BLOCK)								
	(D) W/ ORIENTATION #1			(D) W/ ORIENTATION #2			MULLION (D1)			(D) W/ ORIENTATION #1			(D) W/ ORIENTATION #2			MULLION (D1)		
	6'–6"	7'–6"	12'–6"	6'–6"	7'–6"	12'–6"	6'–6"	7'–6"	12'–6"	6'–6"	7'–6"	12'–6"	6'–6"	7'–6"	12'–6"	6'–6"	7'–6"	12'–6"
+45, –45	12'–0"	11'–6"	7'–8"	12'–0"	11'–0"	7'–2"	10'–7"	9'–0"	5'–11"	12'–0" / 12'–0"	11'–6" / 11'–6"	7'–8" / 5'–6"	12'–0" / 12'–0"	11'–0" / 9'–9"	6'–9" / 4'–1"	10'–7" / 10'–7"	9'–0" / 9'–0"	5'–11" / 5'–1"
+50, –50	12'–0"	10'–0"	N/A	12'–0"	10'–4"	N/A	9'–11"	8'–6"	N/A	12'–0" / 12'–0"	10'–0" / 10'–0"	N/A	12'–0" / 12'–0"	10'–4" / 8'–8"	N/A	9'–11" / 9'–11"	8'–6" / 8'–6"	N/A

T.D.I. 2003

© 2006 TILTECO INC.

TILTECO INC.
TILLIT TESTING & ENGINEERING COMPANY
6355 N.W. 36th. St., Ste. 305, VIRGINIA GARDENS, Fl. 33166
Phone : (305)871–1530 . Fax : (305)871–1531
e–mail: tilteco@aol.com
EB–0006719
WALTER A. TILLIT Jr. P. E.
FLORIDA Lic. # 44167

BARRACUDA END RETENTION ROLL–UP SHUTTER SYSTEM

ALUTECH UNITED INC.
15 DIXON STREET
SELBYVILLE, DE 19975

REV. No	DESCRIPTION	DATE	REV. No	DESCRIPTION	DATE
1			3		
2			4		

DRAWN BY F.P.
05/01/07 DATE
07–117 DRAWING No
SHEET 8 OF 8