ROYAL SPAN PANEL TYPICAL DETAILS OVER WOOD PURLINS

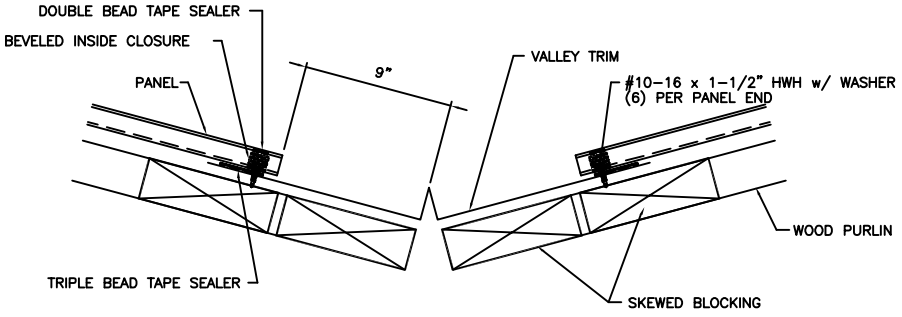

TYPICAL DETAIL
VALLEY

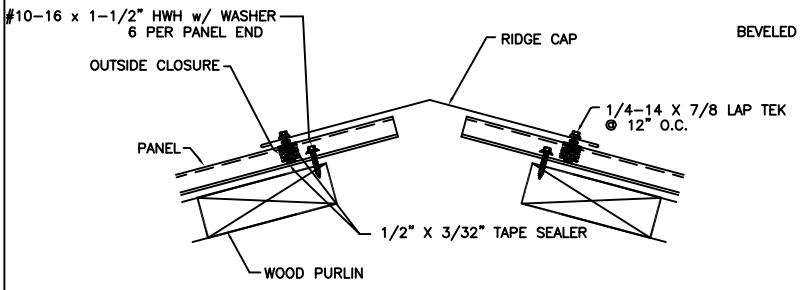

TYPICAL DETAILS
RIDGE

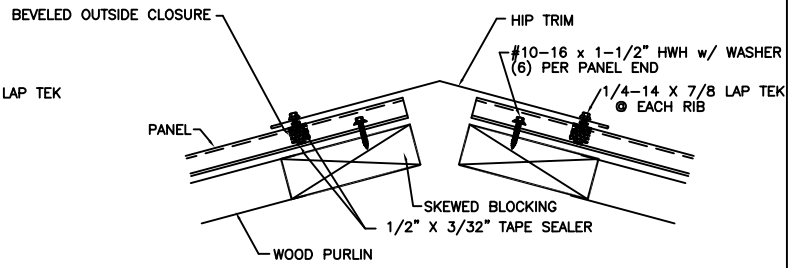

TYPICAL DETAILS
HIP

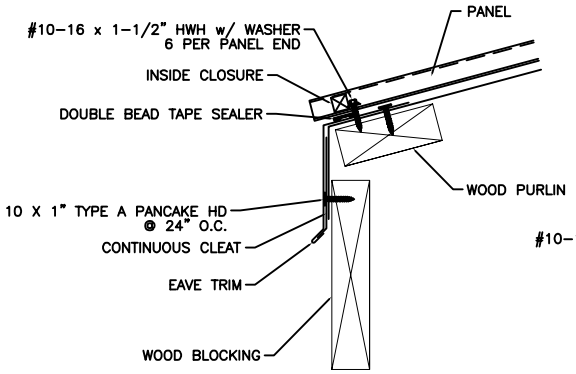

TYPICAL DETAILS
EAVE

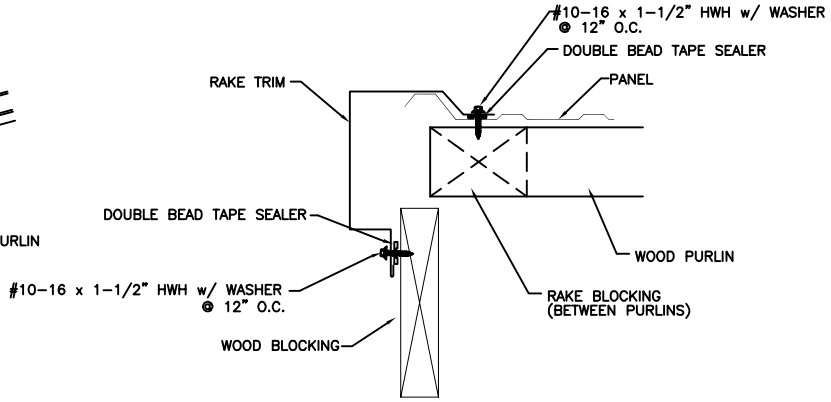

TYPICAL DETAILS
RAKE