Metal Sales
Stile
Metal Roof Panel
Details

9/6/2013

STILE PROFILE — METAL SALES MANUFACTURING CORPORATION

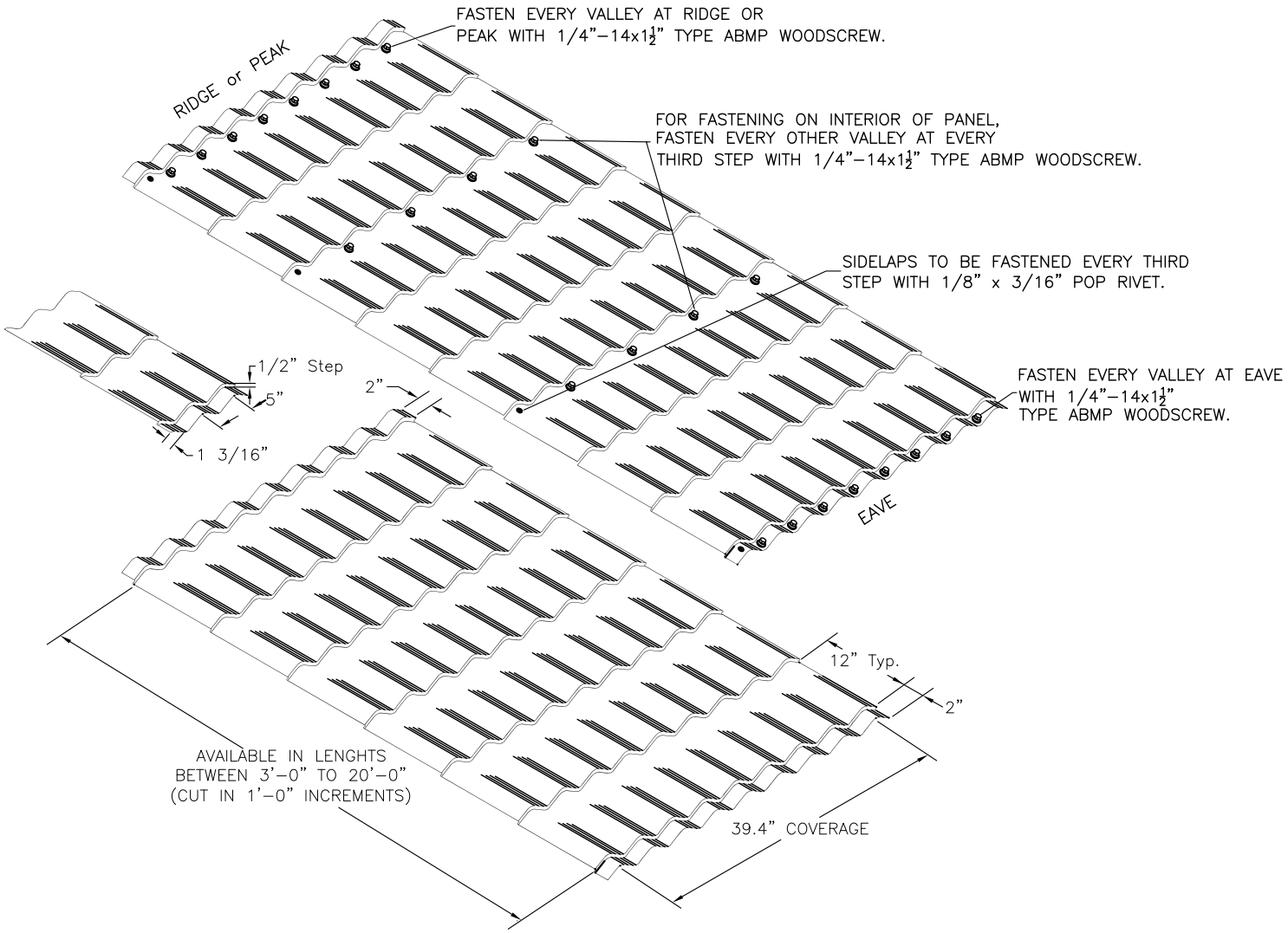

STILE ROOF PANEL FASTENING — METAL SALES MANUFACTURING CORPORATION

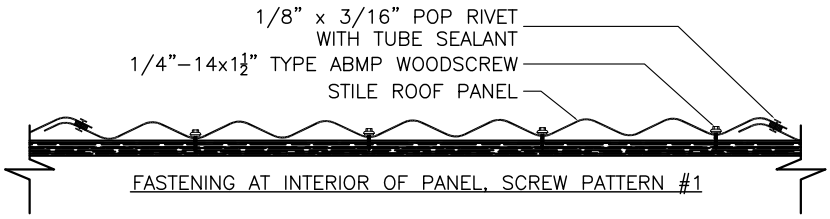

FASTENING AT INTERIOR OF PANEL, SCREW PATTERN #1

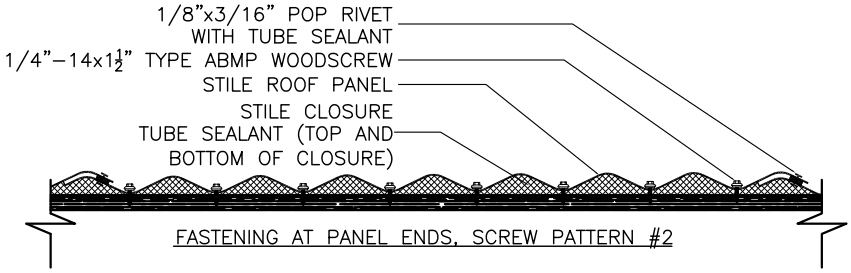

FASTENING AT PANEL ENDS, SCREW PATTERN #2

STILE EAVE DETAIL

METAL SALES MANUFACTURING CORPORATION

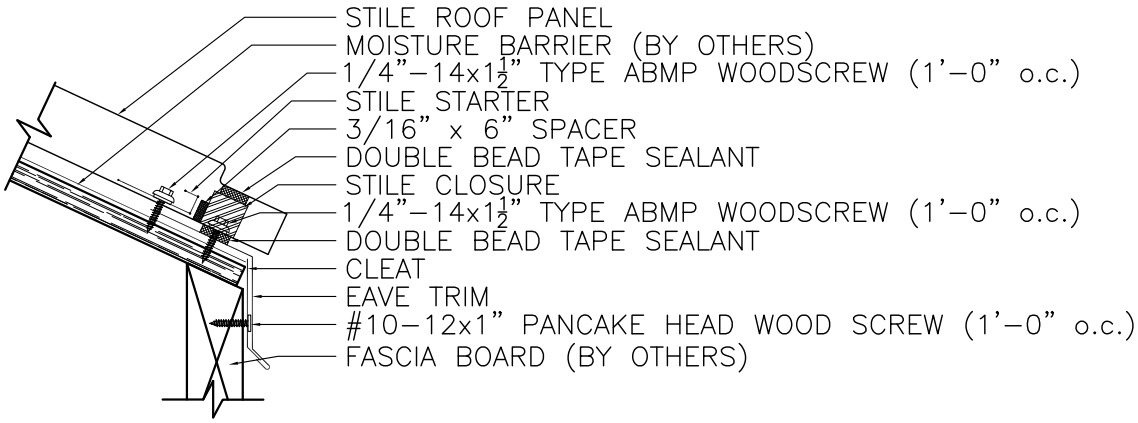

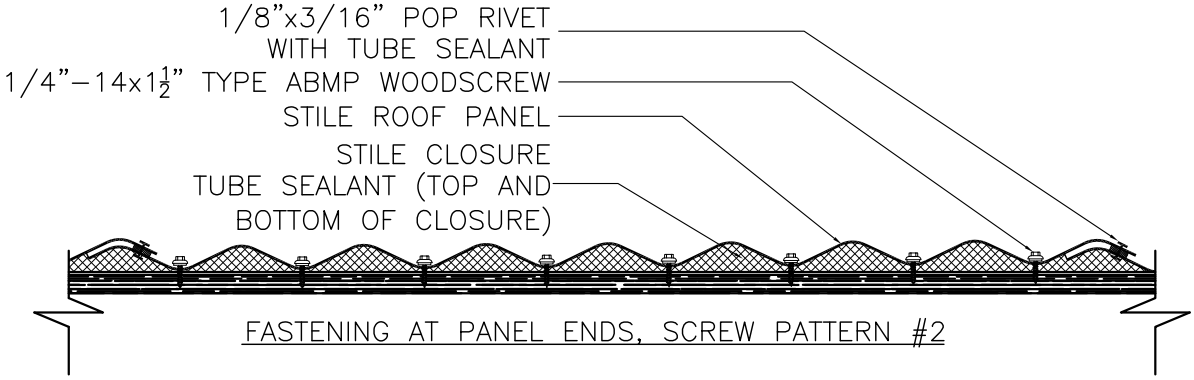

FASTENING AT PANEL ENDS, SCREW PATTERN #2

STILE GUTTER DETAIL

METAL SALES MANUFACTURING CORPORATION

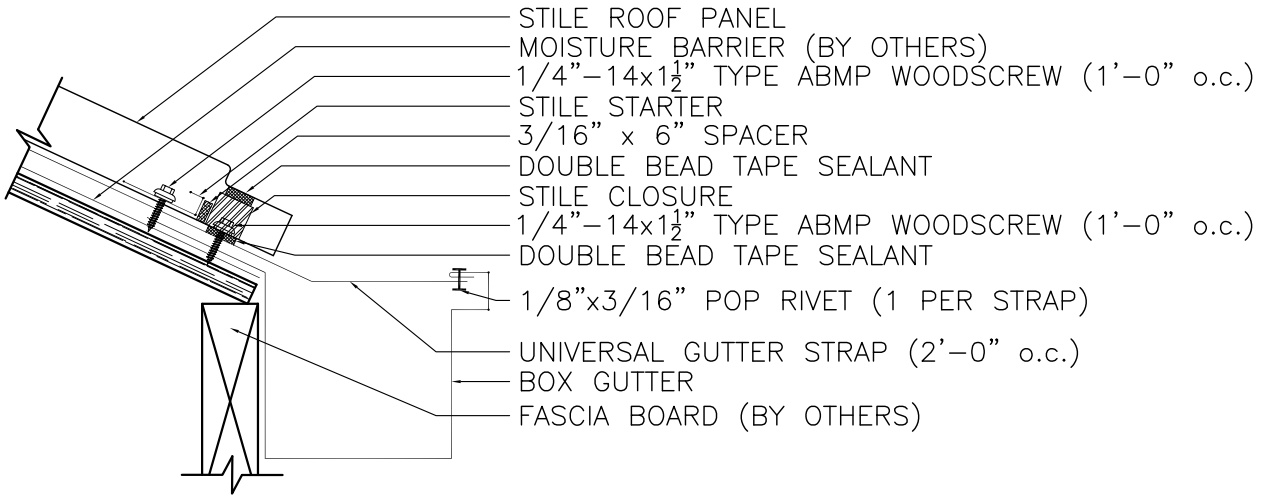

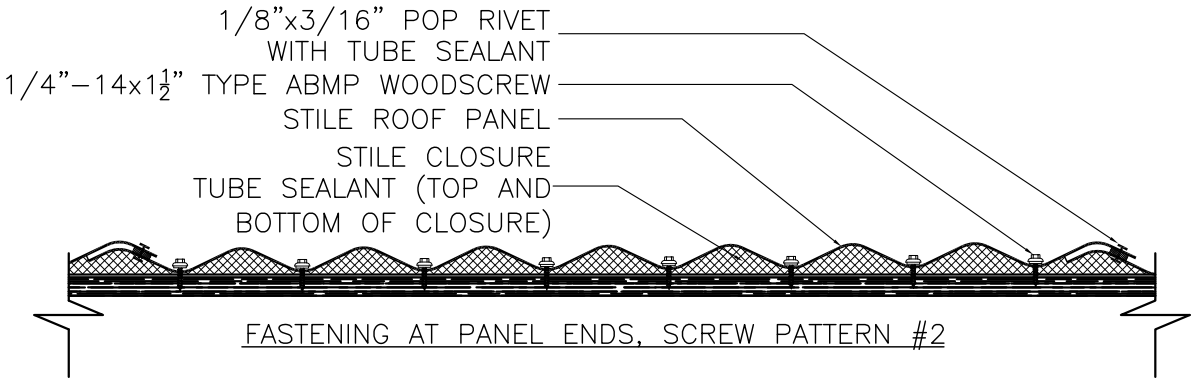

FASTENING AT PANEL ENDS, SCREW PATTERN #2

STILE RAKE DETAIL METAL SALES MANUFACTURING CORPORATION

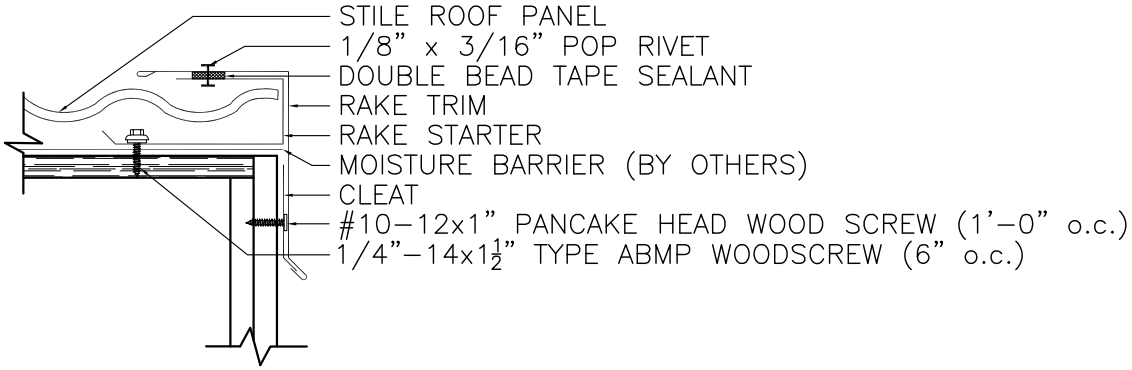

STILE RAKEWALL DETAIL METAL SALES MANUFACTURING CORPORATION

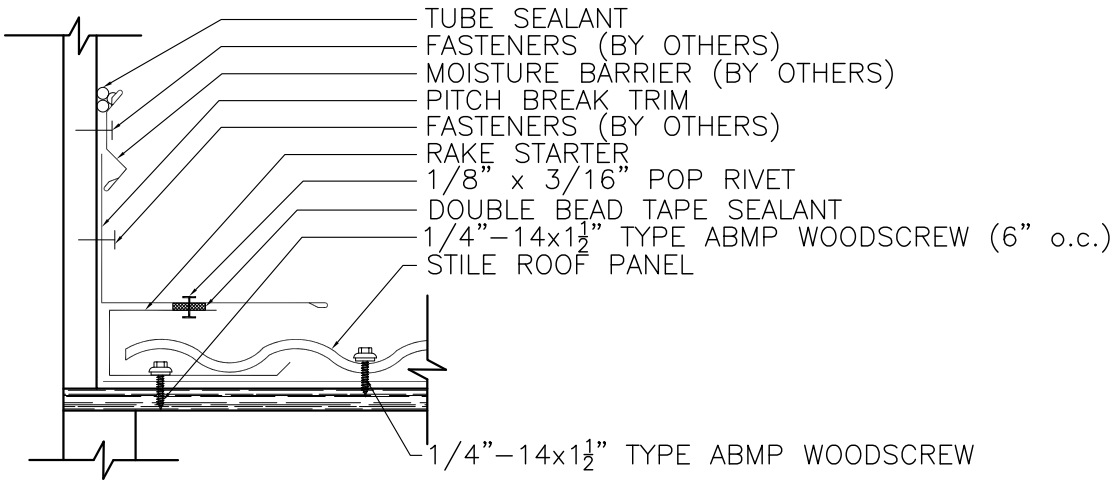

STILE ENDWALL DETAIL — METAL SALES MANUFACTURING CORPORATION

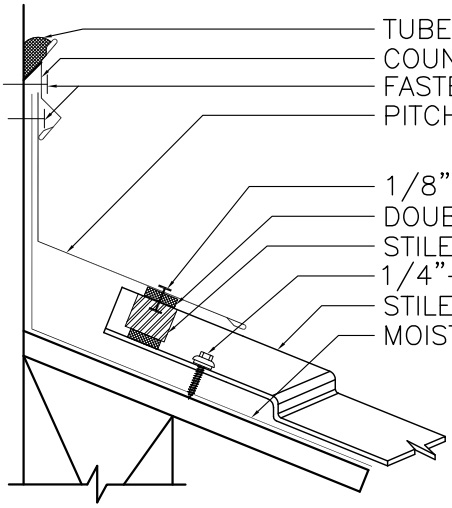

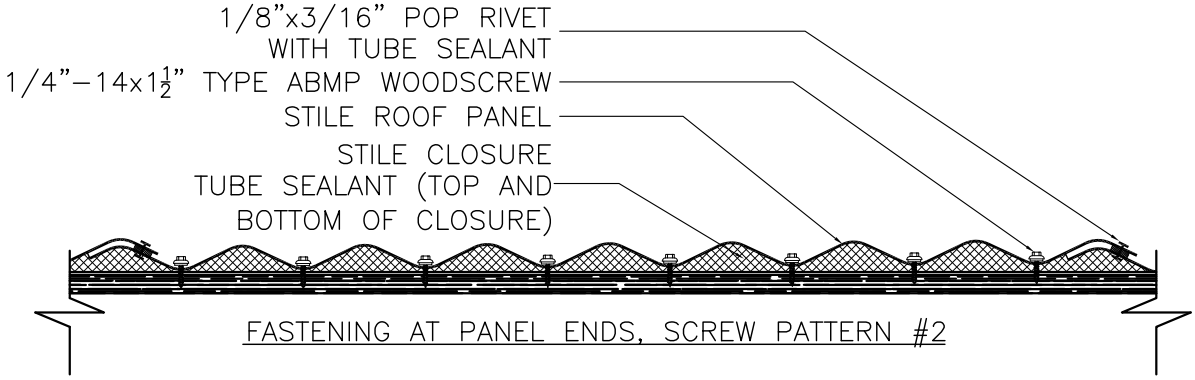

FASTENING AT PANEL ENDS, SCREW PATTERN #2

STILE RIDGE DETAIL — METAL SALES MANUFACTURING CORPORATION

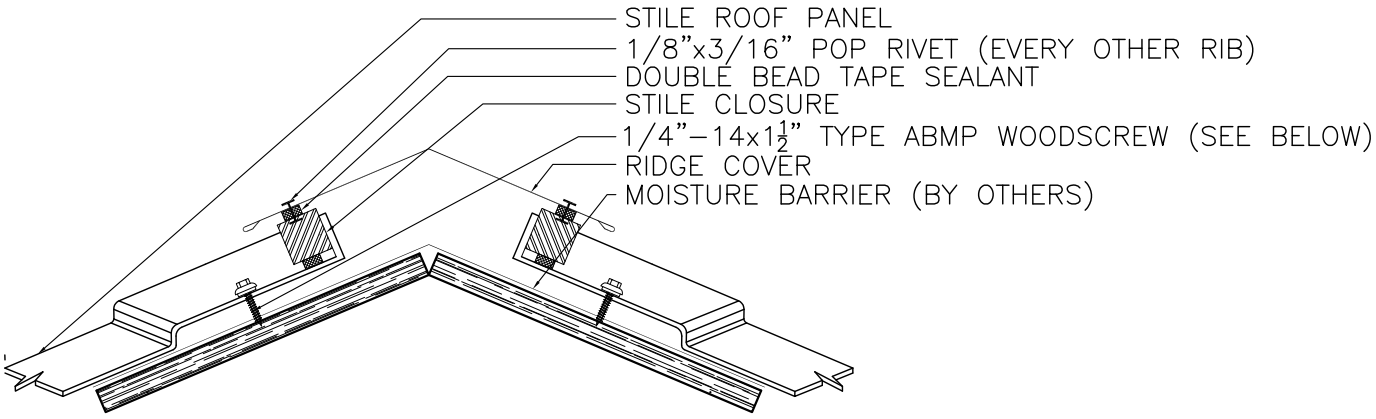

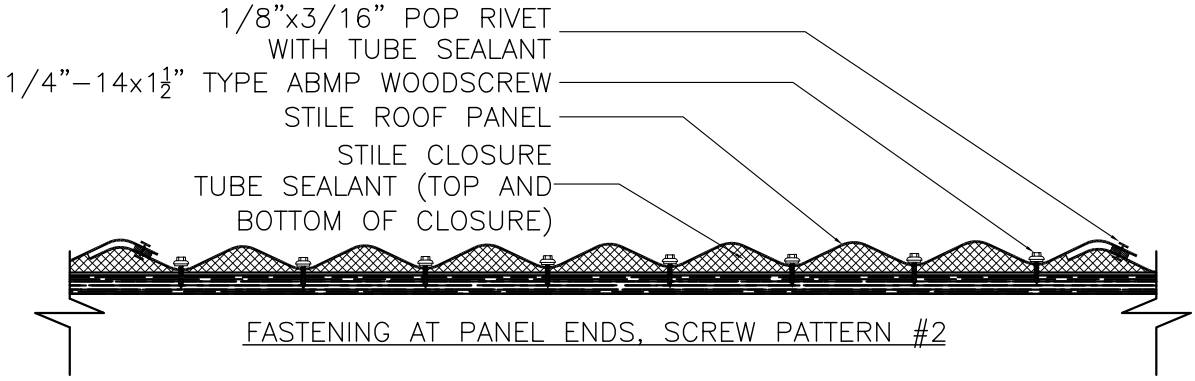

FASTENING AT PANEL ENDS, SCREW PATTERN #2

STILE HIP DETAIL

METAL SALES MANUFACTURING CORPORATION

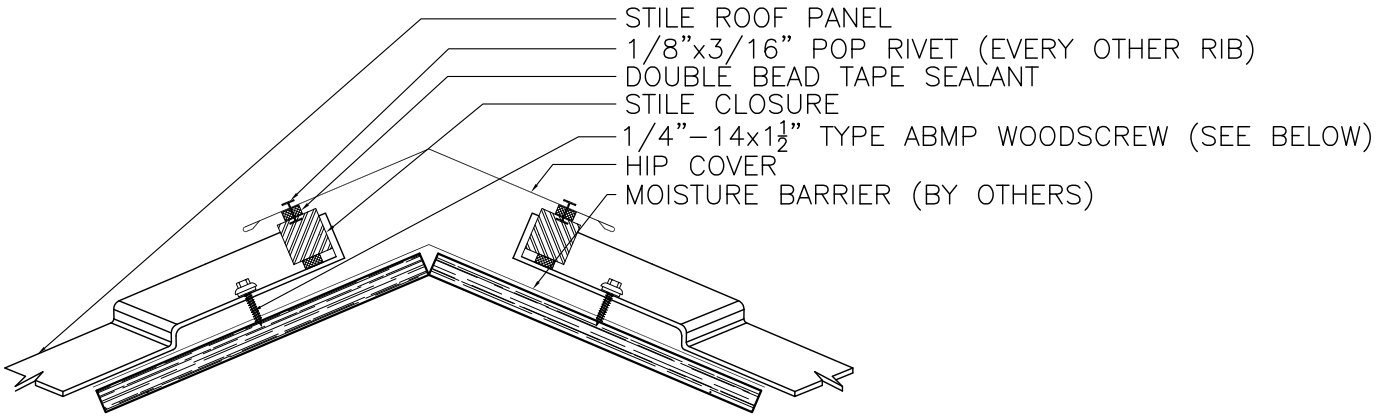

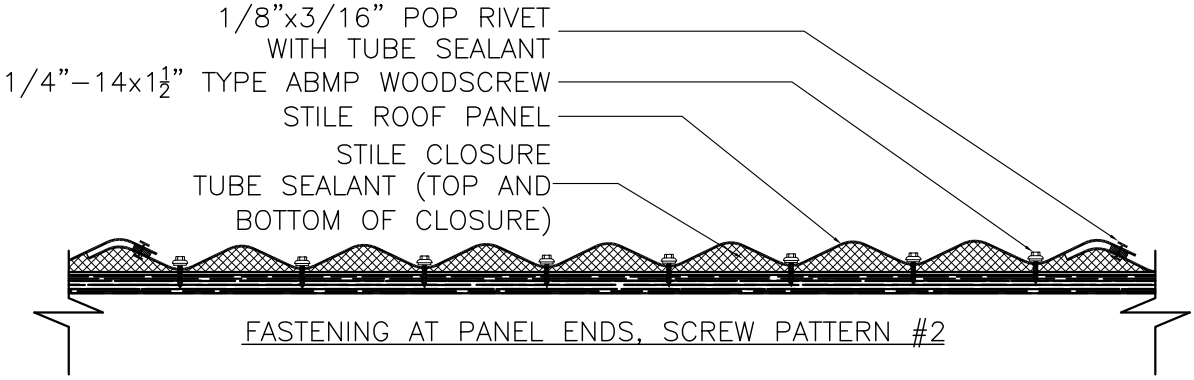

FASTENING AT PANEL ENDS, SCREW PATTERN #2

STILE VALLEY DETAIL

METAL SALES MANUFACTURING CORPORATION

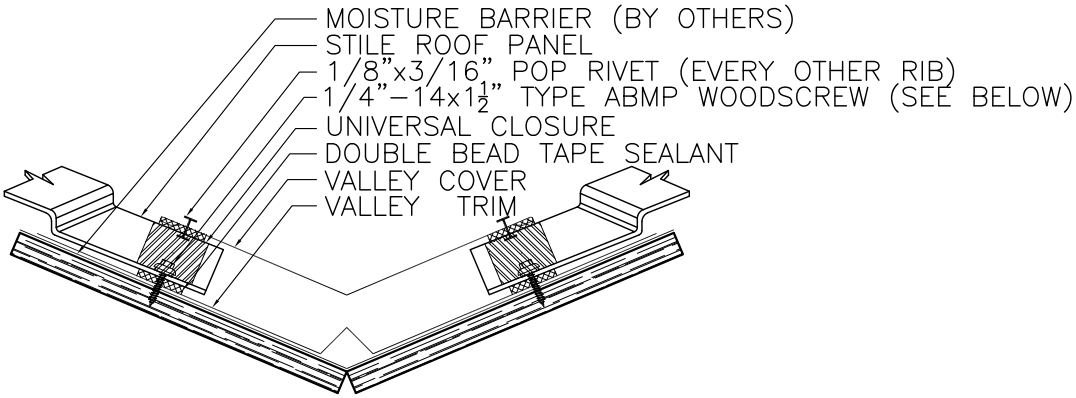

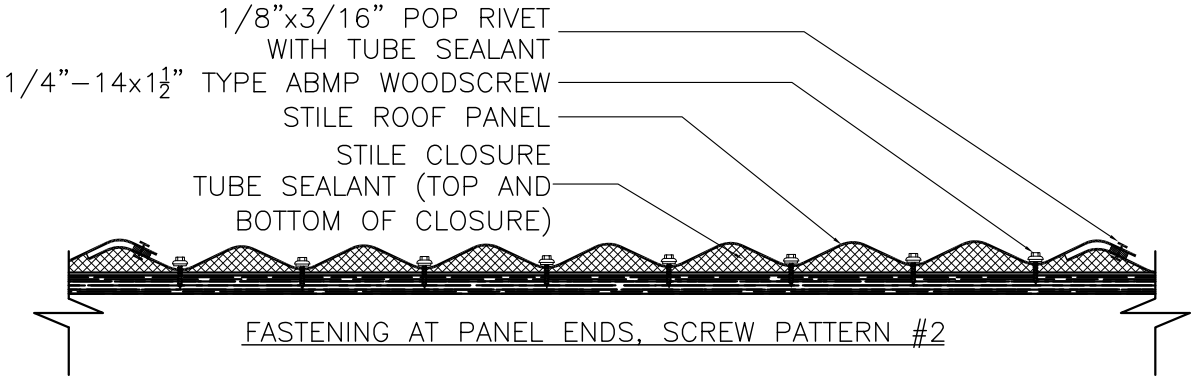

FASTENING AT PANEL ENDS, SCREW PATTERN #2

STILE PEAK DETAIL

METAL SALES MANUFACTURING CORPORATION

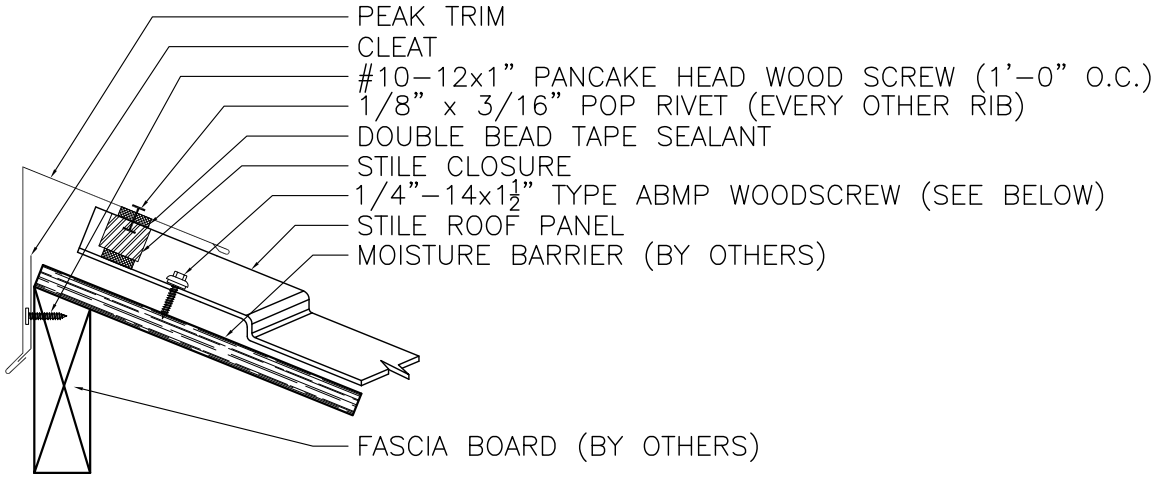

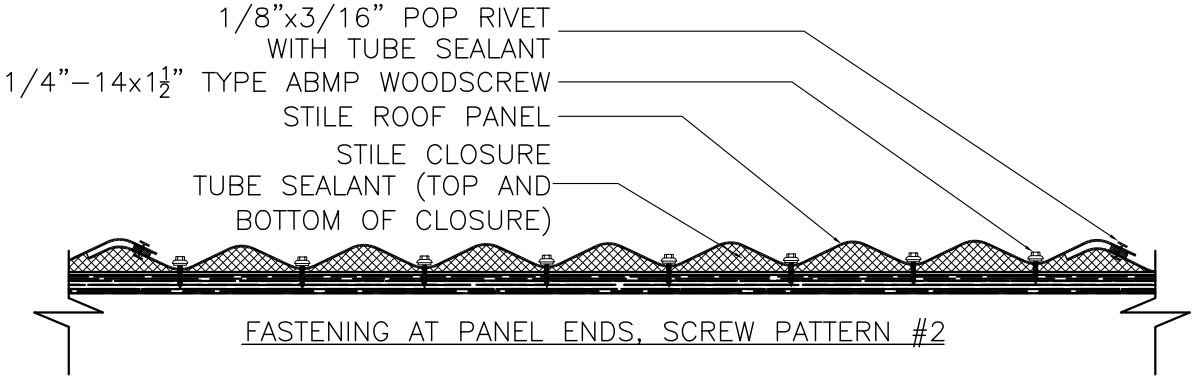

FASTENING AT PANEL ENDS, SCREW PATTERN #2

METAL SALES MANUFACTURING CORPORATION