CLASSIC–RIB PANEL PROFILE

METAL SALES MANUFACTURING

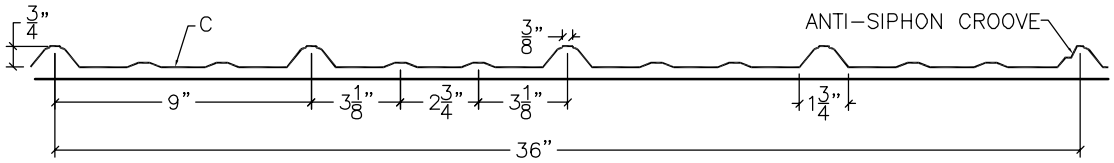

CLASSIC–RIB PANEL FASTENING

METAL SALES MANUFACTURING

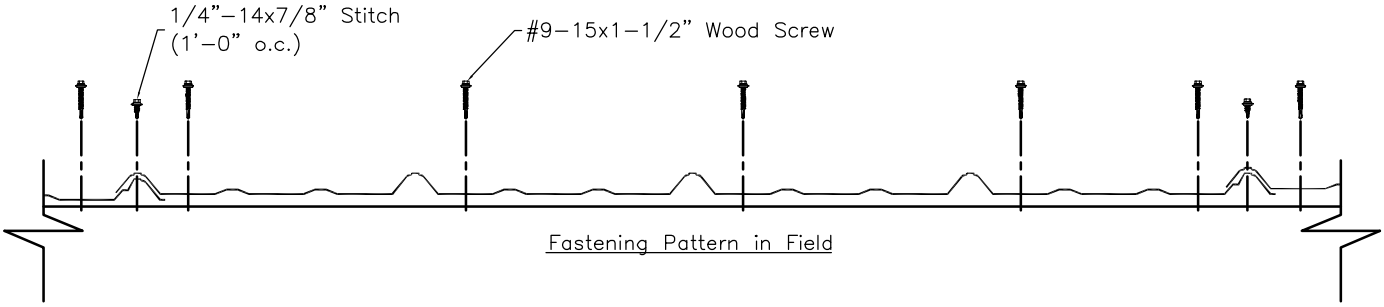

Fastening Pattern in Field

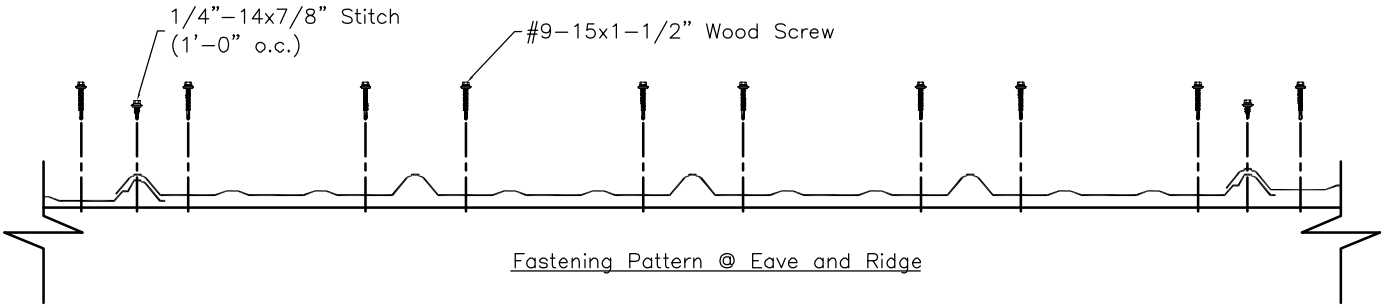

Fastening Pattern @ Eave and Ridge

CLASSIC–RIB EAVE DETAIL

METAL SALES MANUFACTURING

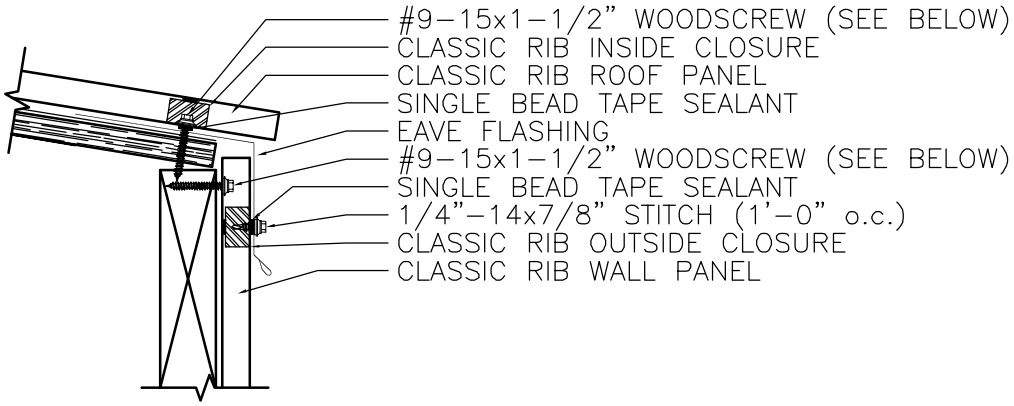

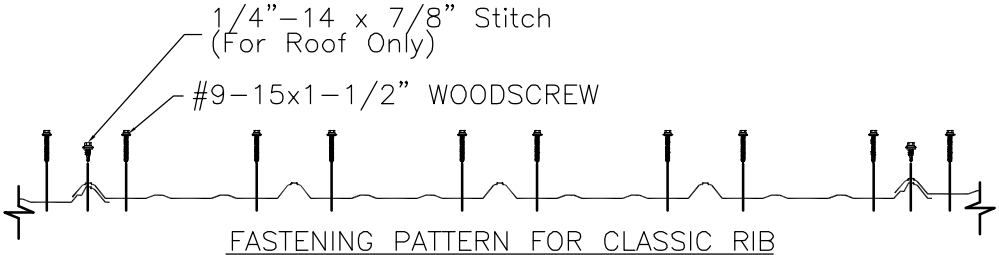

FASTENING PATTERN FOR CLASSIC RIB

CLASSIC–RIB GUTTER DETAIL

METAL SALES MANUFACTURING

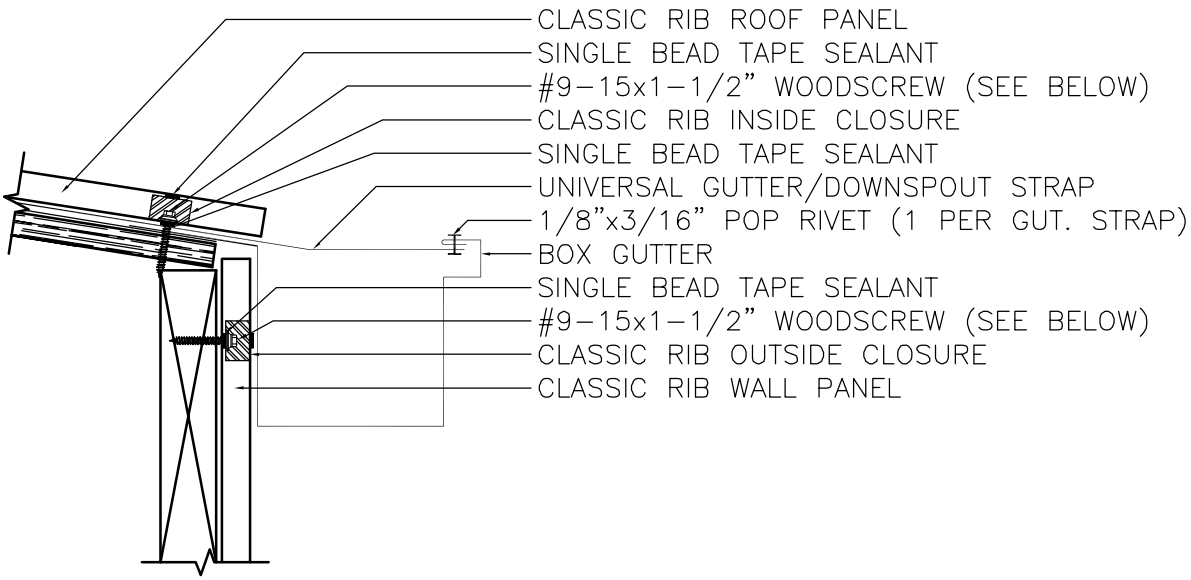

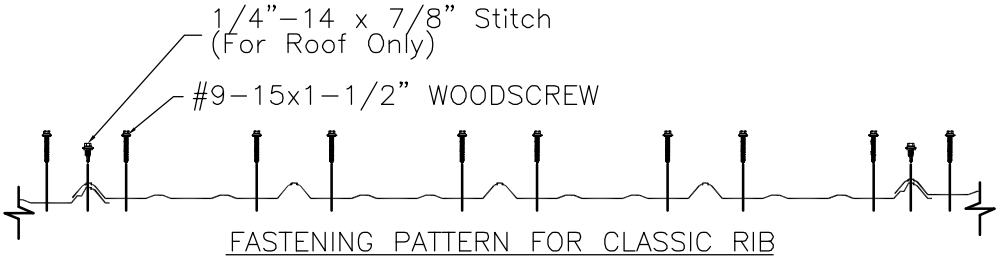

FASTENING PATTERN FOR CLASSIC RIB

CLASSIC–RIB RAKE DETAIL

METAL SALES MANUFACTURING

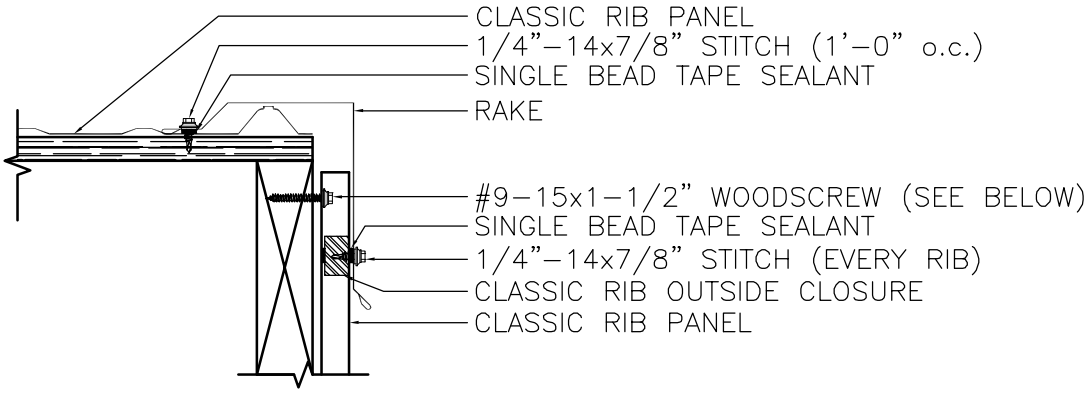

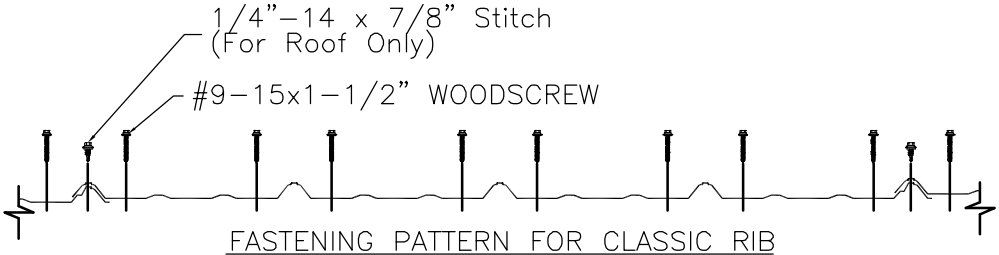

FASTENING PATTERN FOR CLASSIC RIB

CLASSIC–RIB RAKEWALL DETAIL

METAL SALES MANUFACTURING

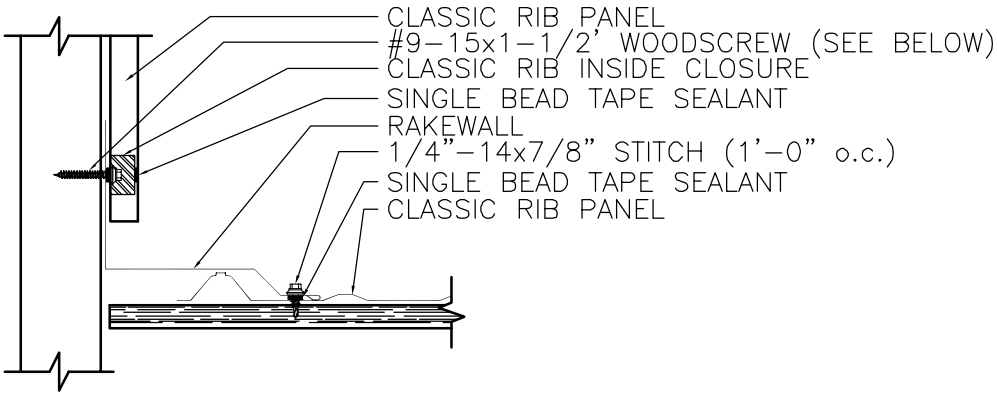

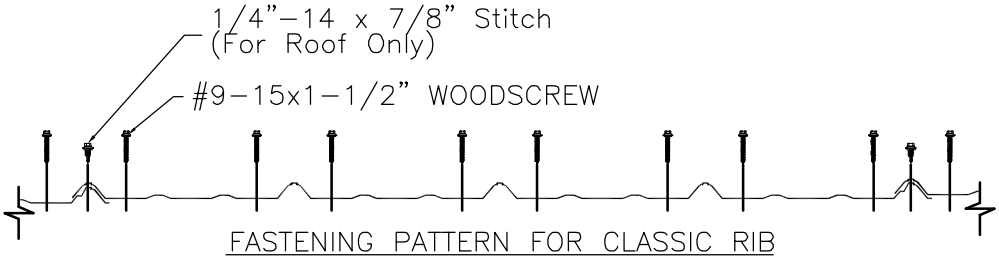

FASTENING PATTERN FOR CLASSIC RIB

CLASSIC–RIB ENDWALL DETAIL

METAL SALES MANUFACTURING

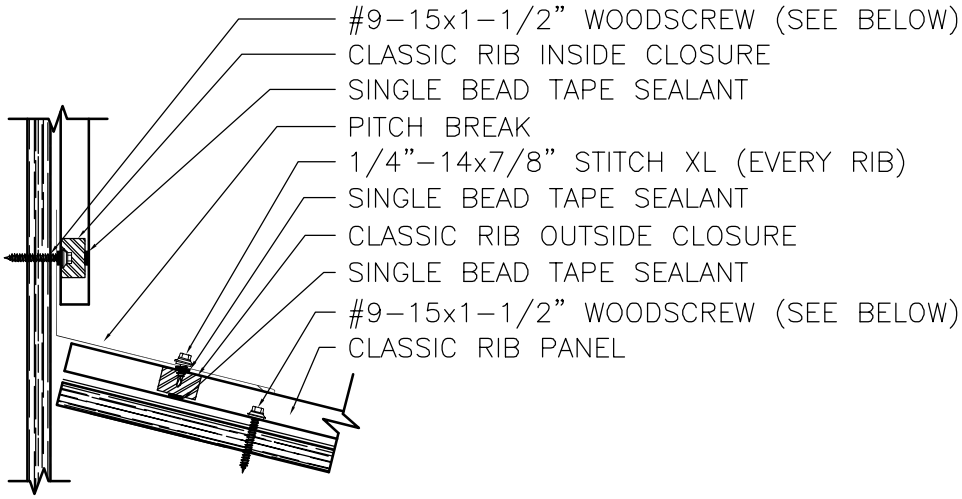

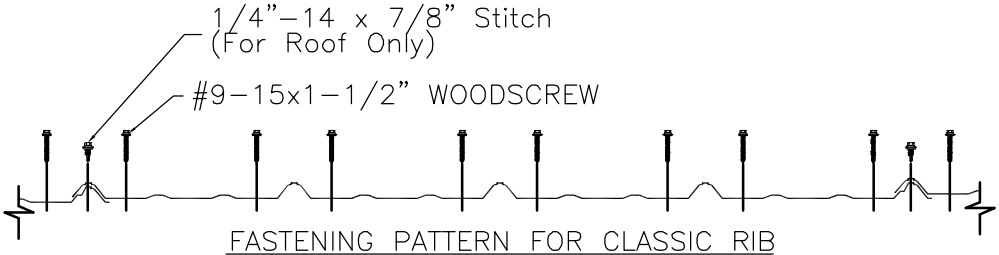

FASTENING PATTERN FOR CLASSIC RIB

CLASSIC–RIB RIDGE DETAIL

METAL SALES MANUFACTURING

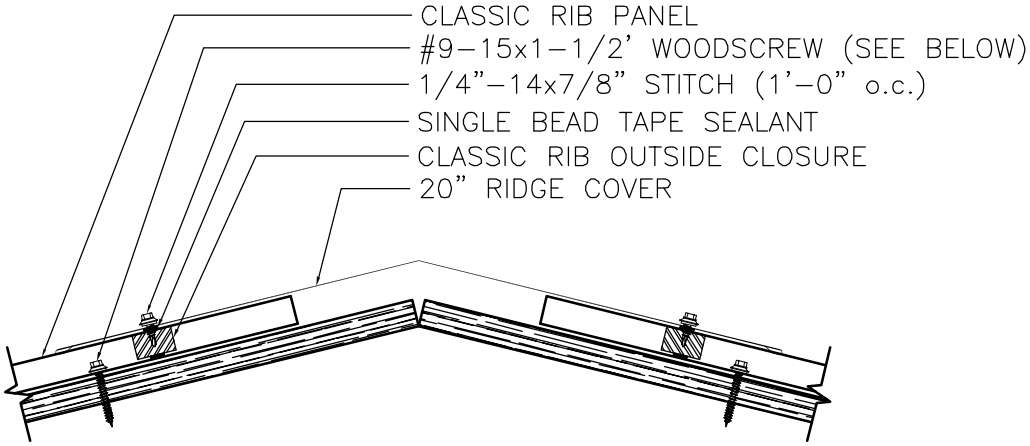

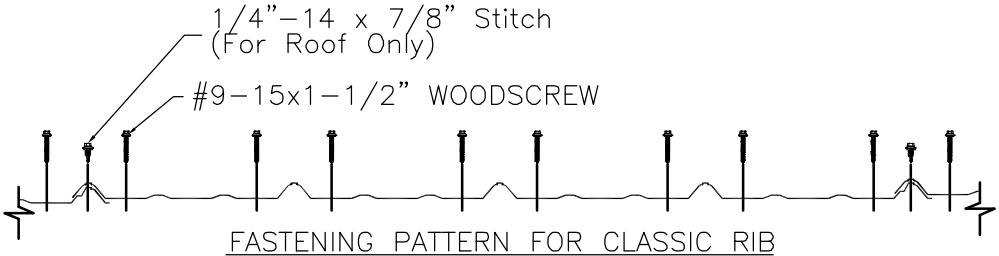

FASTENING PATTERN FOR CLASSIC RIB

CLASSIC–RIB HIP DETAIL

METAL SALES MANUFACTURING

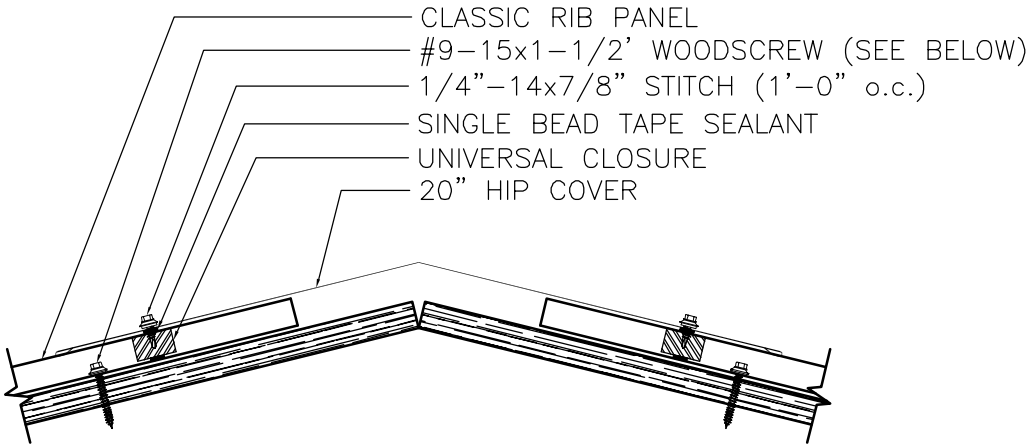

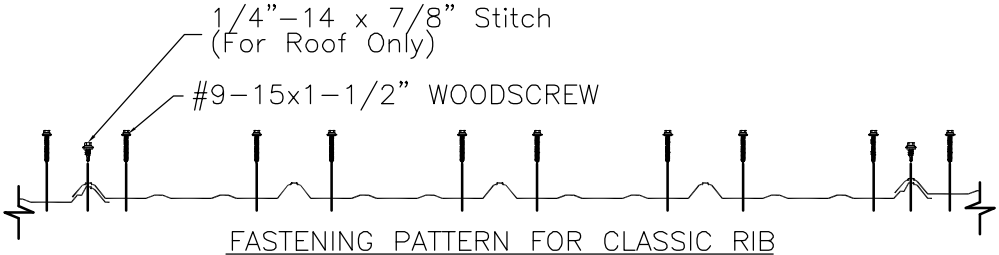

FASTENING PATTERN FOR CLASSIC RIB

CLASSIC–RIB VALLEY DETAIL

METAL SALES MANUFACTURING

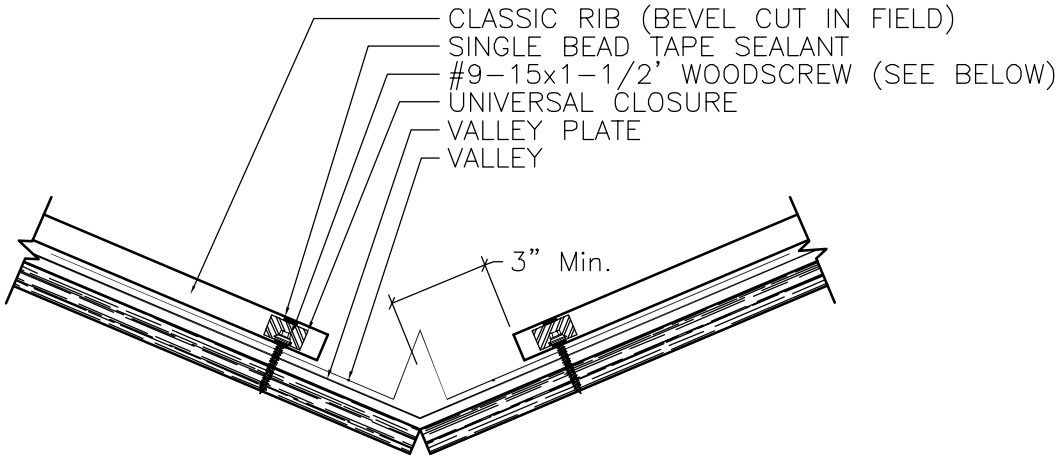

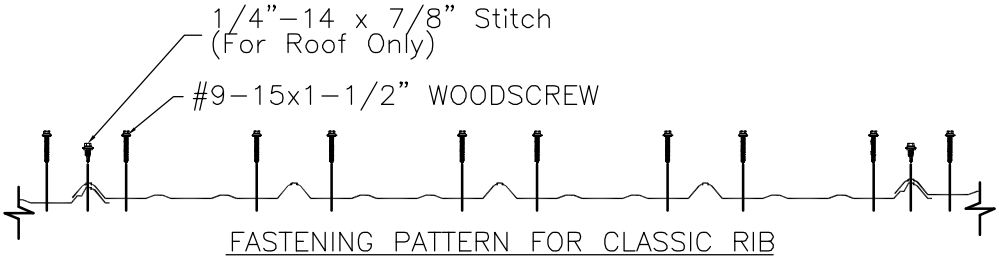

FASTENING PATTERN FOR CLASSIC RIB

CLASSIC–RIB PEAK DETAIL

METAL SALES MANUFACTURING

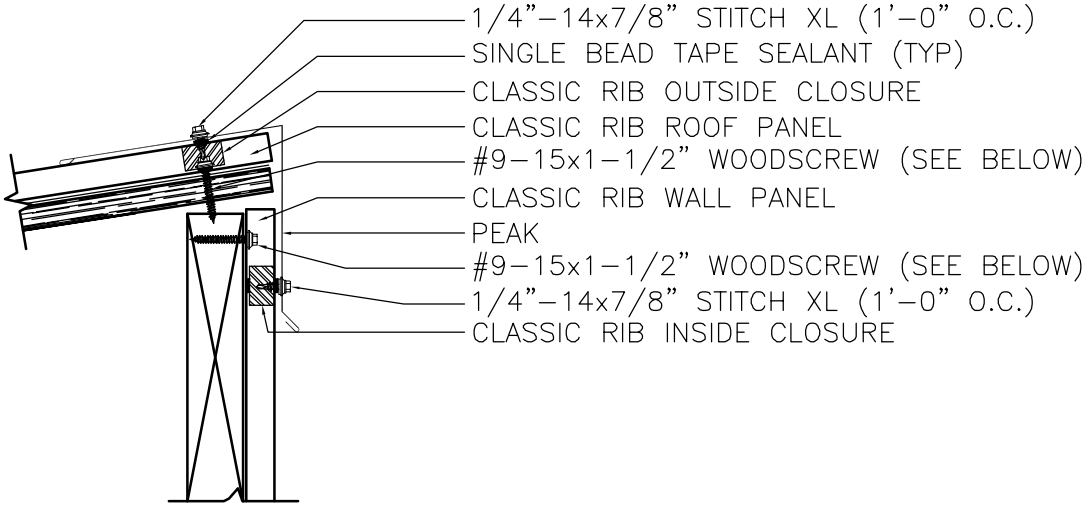

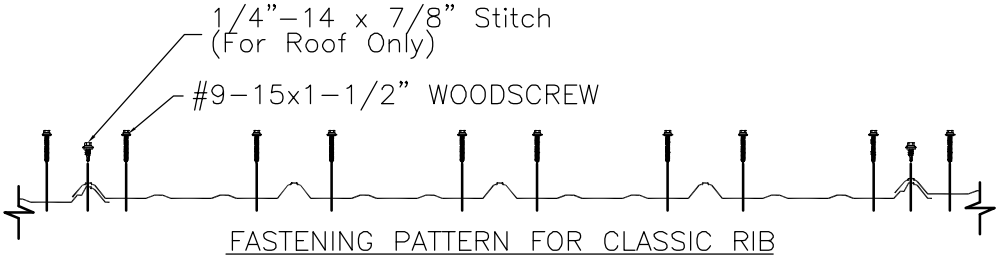

FASTENING PATTERN FOR CLASSIC RIB

METAL SALES MANUFACTURING