NOTES:

1. THE EME520MD HAS BEEN TESTED IN ACCORDANCE WITH FLORIDA PROTOCOLS TAS-201, 202, & 203 FOR LARGE MISSILE IMPACT, UNIFORM PRESSURE AND CYCLIC WIND PRESSURE.

2. THIS LOUVER SYSTEM IS APPROVED FOR APPLICATIONS WITH DESIGN PRESSURES OF +/- 120 PSF OR LESS.

3. THIS LOUVER SYSTEM IS TO BE INSTALLED IN LOCATIONS WHERE THE ROOMS BEHIND THE LOUVERS ARE DESIGNED TO DRAIN WATER PENETRATING INTO THE ROOMS, AND THE ROOMS WILL HOUSE WATER RESISTANT/WATER PROOF EQUIPMENT, COMPONENTS OR SUPPLIES.

4. THIS LOUVER SYSTEM IS NON-BEARING AND IS NOT DESIGNED TO WITHSTAND BUILDING DEAD LOADS.

5. THIS LOUVER UTILIZES AN ANCHORLESS INSTALLATION METHOD THAT DOES NOT REQUIRE THE USE OF FASTENERS INTO THE WALL SUBSTRATE THAT WILL WITHSTAND THE LOADS TRANSFERRED TO IT BY THE LOUVER. RUSKIN DOES NOT DETERMINE THE STRUCTURAL INTEGRITY OF THE STRUCTURE.

6. MAXIMUM SINGLE SECTION SIZE: 87 15/16" WIDE X 144" HIGH OR 144" WIDE X 112" HIGH.

7. MAXIMUM ASSEMBLED LOUVER SIZE: UNLIMITED WIDE X 144" TALL W SECTION MULLIONS AT 87 7/8" (TRIANGLES ALLOWED), UNLIMITED WIDTH X 144" TALL W SECTION MULLIONS AT 104 15/16" W/O JAMB ATTACHMENTS, HEAD AND SILL ATTACHMENTS ONLY. ROUND ASSEMBLIES UP TO 144" DIAMETER.

8. SECTIONS OR ASSEMBLIES MAY BE STACKED VERTICALLY PROVIDING A SUITABLE STRUCTURAL SUPPORT IS DESIGNED AND INSTALLED BY OTHERS TO SUPPORT ALL LOADS TRANSFERRED FROM THE LOUVER.

9. ALL CMU BLOCK MUST BE GROUT FILLED. MIN PRISM STRENGTH OF 1500 PSI AT TIME OF INSTALLATION. CMU BLOCKS MUST BE MN. TYPE 1, GRADE N, LIGHT, MEDIUM, OR NORMAL WEIGHT PER ASTM C90. GROUT AND MORTAR MUST COMPLY WITH FBC.

10. ABBREVIATIONS: H.D.G IS HOT DIP GALVANIZED, STL IS STEEL, HWH IS HEX WASHER HEAD, SDS IS SELF-DRILLING SCREW

11. CARBON STEEL AND OTHER NON-COMATIBLE METALS CONTACTING ALUMINUM SHALL BE PROTECTED BY PAINT OR OTHER MEANS PER FLORIDA BUILDING CODE SECTION 2003.8.4.2.

DRAWING INDEX:

60-022376-00B SHEET 01 OF 21 - NOTES AND DRAWING INDEX
60-022376-00B SHEET 02 OF 21- ASSEMBLY 'A' & DETAILS
60-022376-00B SHEET 03 OF 21- ASSY 'A' ALT. CONNECTION DETAILS
60-022376-00B SHEET 04 OF 21- ASSY 'A' ALT. CONNECTION DETAILS
60-022376-00B SHEET 05 OF 21- ASSEMBLY 'B'
60-022376-00B SHEET 06 OF 21- ASSEMBLY 'C'
60-022376-00B SHEET 07 OF 21- ASSEMBLY 'D'
60-022376-00B SHEET 08 OF 21- ASSY 'B, C, & D' DETAILS
60-022376-00B SHEET 09 OF 21- ASSY 'B, C, & D' DETAILS
60-022376-00B SHEET 10 OF 21- ASSY 'B, C, & D' ALT. CONNECTION DETAILS
60-022376-00B SHEET 11 OF 21- ASSY 'B, C, & D' ALT. CONNECTION DETAILS
60-022376-00B SHEET 12 OF 21- ASSEMBLY 'E'
60-022376-00B SHEET 13 OF 21- ASSY 'E' DETAILS
60-022376-00B SHEET 14 OF 21- ASSY 'E' ALT. CONNECTION DETAILS
60-022376-00B SHEET 15 OF 21- ASSEMBLY 'F' & DETAILS
60-022376-00B SHEET 16 OF 21- ASSY 'F' ALT. CONNECTION DETAILS
60-022376-00B SHEET 17 OF 21- ASSY 'F' ALT. CONNECTION DETAILS
60-022376-00B SHEET 18 OF 21- PARTS DETAILS
60-022376-00B SHEET 19 OF 21- PARTS DETAILS
60-022376-00B SHEET 20 OF 21- PARTS DETAILS
60-022376-00B SHEET 21 OF 21- ASSY 'B, C, &D' SUPPORT TABLES

ENGINEER OF RECORD
CHELSEA GQ.WELCH
ENGINEERING DISCIPLINE
CIVIL ENGINEERING
REGISTRATION NUMBER
TX# 117359

STATE OF TEXAS
CHELSEA G. WELCH
117359
LICENSED
PROFESSIONAL ENGINEER
1/29/2016

FOR OFFICE USE ONLY

FOR OFFICE USE ONLY

*REFERENCE NOTE: THESE DRAWINGS ARE A COPY OF THE DADE CO. APPROVAL. ANY REFERENCE, TECHINCAL OR CALCULATIONS ARE PER N.O.A. #12-0816.01

TOLERANCES
DECIMAL DIMENSIONS:
3 PLACE .XXX +.010_
2 PLACE .XX +.020_
FRACTION DIMENSIONS: + 1/16
ANGLE DIMENSIONS + 2°
USE WIQ-007 & 008
UNLESS SPECIFIED OTHERWISE

DWN. BY:	CHK. BY:	APPV'D. BY:	APPV'D. BY:
J-W	CGW	CGW	
DATE: 10/10/14	DATE: 10/10/14	DATE: 10/10/14	DATE:

SHEET 1 OF 21

CHANGE LETTER	REVISION DESCRIPTION	DWN. BY:	CHK'D. BY:	APPV'D. BY:	APPV'D. BY:	DATE

RUSKIN
Air & Sound Control
3900 DR. GREAVES RD
GRANDVIEW, MO 64030

PLOT SCALE: NONE

ECN: -

TITLE
EME520MD
APPROVAL DRAWINGS

DWG. NO.
60-022376-00B

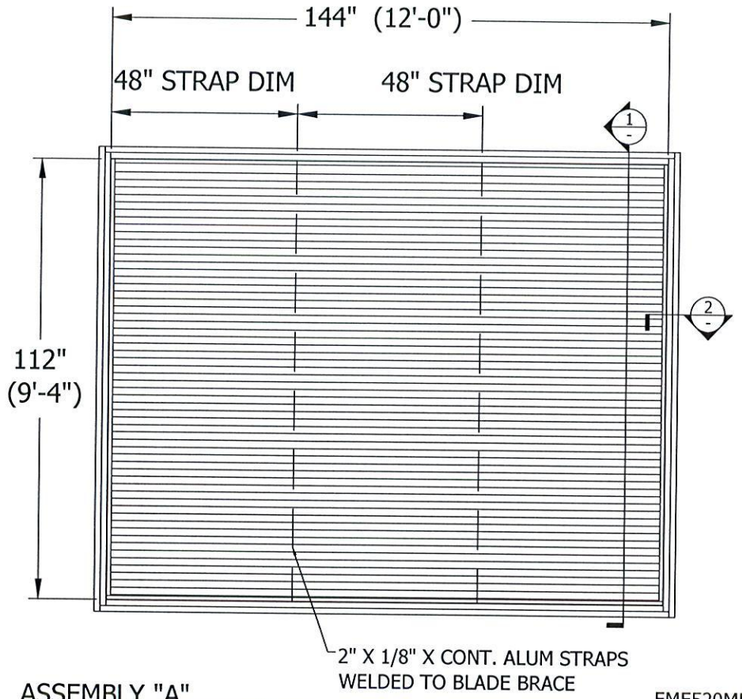

ASSEMBLY "A"

N.T.S.

EME520MD

FRONT VIEW

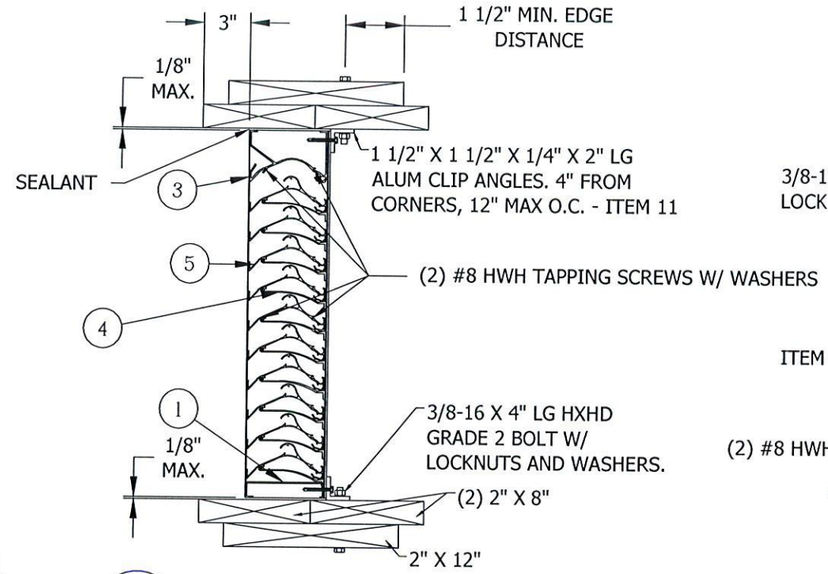

1 / - INSTALLATION

N.T.S.

EME520MD

SECTION VIEW

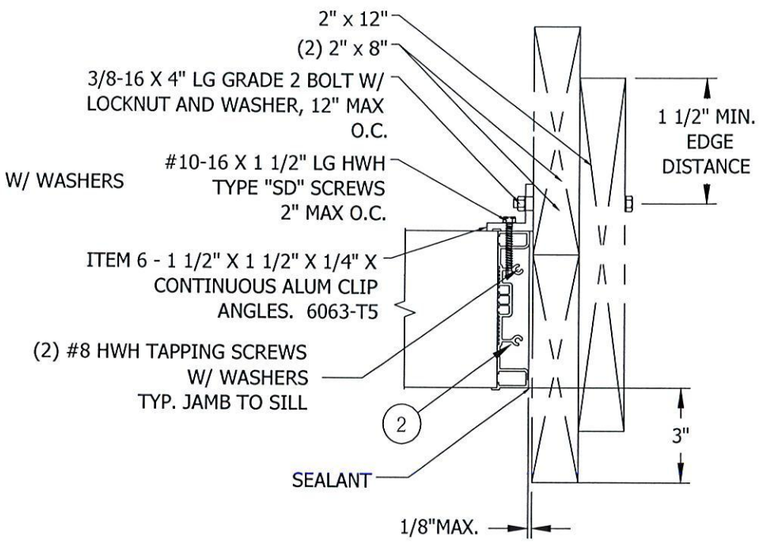

2 / - JAMB ATTACHMENT

N.T.S.

ENGINEER OF RECORD

CHELSEA GQ.WELCH

ENGINEERING DISCIPLINE

CIVIL ENGINEERING

REGISTRATION NUMBER

TX# 117359

STATE OF TEXAS
CHELSEA G. WELCH
117359
LICENSED
PROFESSIONAL ENGINEER

1/29/2016

FOR OFFICE USE ONLY

FOR OFFICE USE ONLY

TOLERANCES
DECIMAL DIMENSIONS:
3 PLACE .XXX ± .010
2 PLACE .XX ± .020
FRACTION DIMENSIONS: ± 1/16
ANGLE DIMENSIONS ± 2°
USE WIC-007 & 008
UNLESS SPECIFIED OTHERWISE

DWN. BY: J-W	CHK. BY: CGW	APPV'D. BY: CGW	APPV'D. BY:
DATE: 10/10/14	DATE: 10/10/14	DATE: 10/10/14	DATE:

SHEET 2 OF 21

CHANGE LETTER	REVISION DESCRIPTION	DWN. BY:	CHK'D. BY:	APPV'D. BY:	APPV'D. BY:	DATE

RUSKIN
Air & Sound Control
3900 DR. GREAVES RD
GRANDVIEW, MO 64030

PLOT SCALE: B

ECN: -

TITLE: EME520MD
ASSEMBLY A & DETAILS

DWG. NO. 60-022376-00B

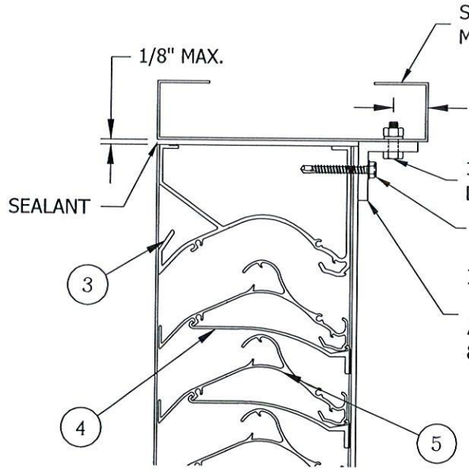

1B — ASSEMBLY "A" ALTERNATE CONNECTION

N.T.S.
STEEL SUBSTRATE (16 GA MIN. THICKNESS)

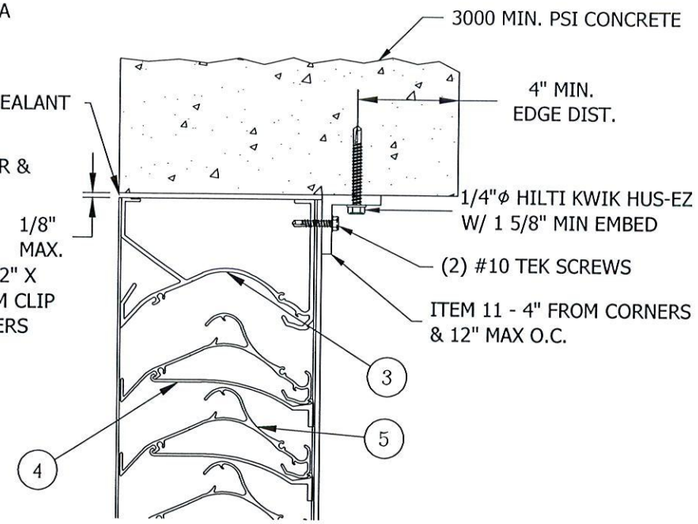

1C — ASSEMBLY "A" ALTERNATE CONNECTION

N.T.S.
3000 MIN. PSI CONCRETE

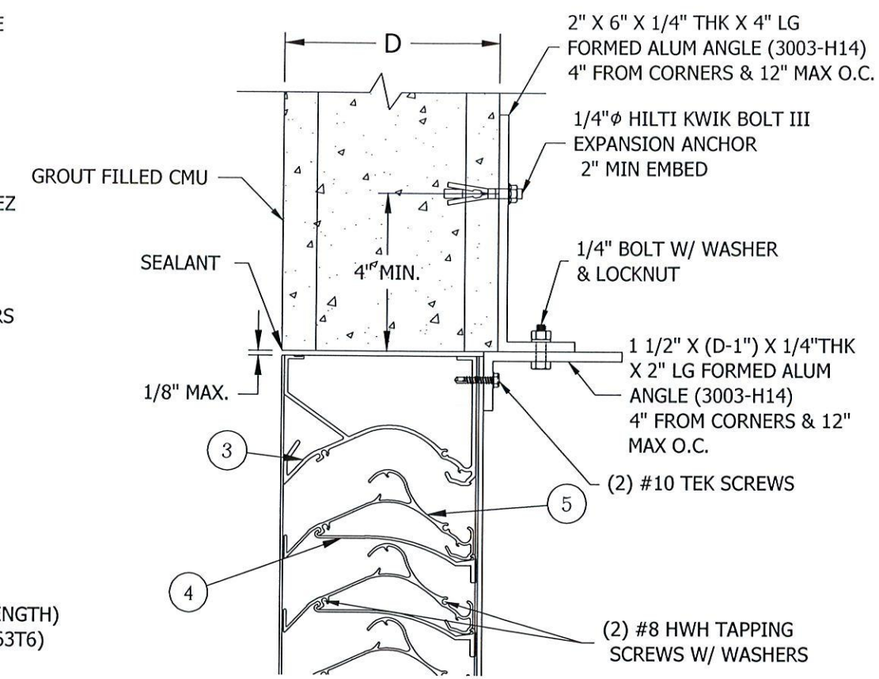

1D — ASSEMBLY "A" ALTERNATE CONNECTION

N.T.S.
GROUT FILLED CMU BLOCK - REF. NOTE 9

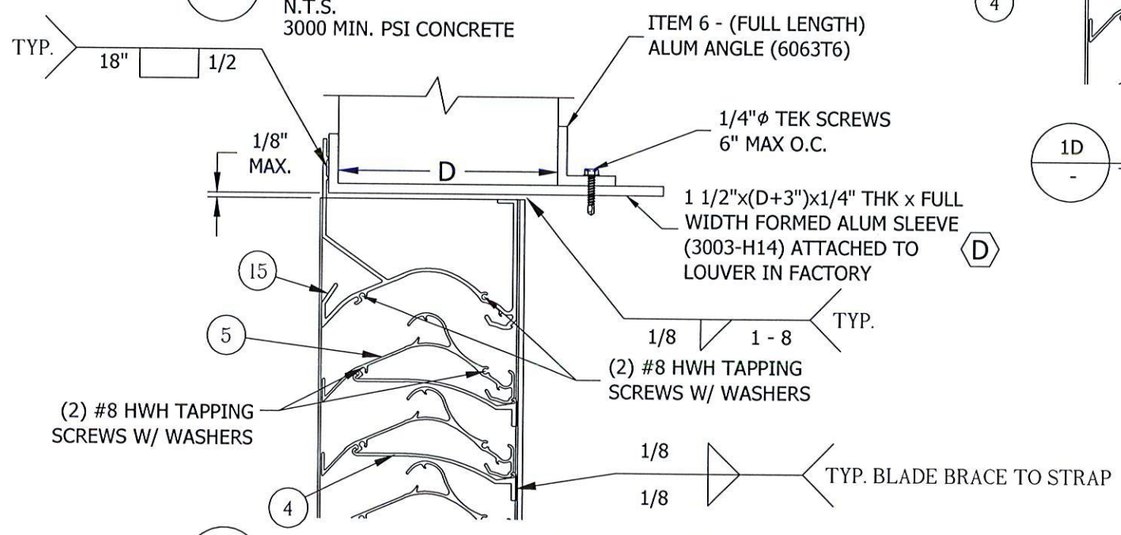

1E — ASSEMBLY "A" ALTERNATE CONNECTION

N.T.S.
FLANGE FRAME W/ SLEEVE CONDITION

ENGINEER OF RECORD
CHELSEA GQ.WELCH
ENGINEERING DISCIPLINE
CIVIL ENGINEERING
REGISTRATION NUMBER
TX# 117359

STATE OF TEXAS
CHELSEA G. WELCH
117359
LICENSED
PROFESSIONAL ENGINEER
1/29/2016

FOR OFFICE USE ONLY

FOR OFFICE USE ONLY

TOLERANCES
DECIMAL DIMENSIONS:
3 PLACE .XXX +.010_
2 PLACE .XX +.020_
FRACTION DIMENSIONS: + 1/16
ANGLE DIMENSIONS + 2°_
USE WIQ-007 & 008
UNLESS SPECIFIED OTHERWISE

DWN. BY:	CHK. BY:	APPV'D. BY:	APPV'D. BY:
J-W	CGW	CGW	
DATE: 10/10/14	DATE: 10/10/14	DATE: 10/10/14	DATE:

SHEET 3 OF 21

CHANGE LETTER	REVISION DESCRIPTION	DWN. BY:	CHK'D. BY:	APPV'D. BY:	APPV'D. BY:	DATE

RUSKIN
Air & Sound Control
3900 DR. GREAVES RD
GRANDVIEW, MO 64030

PLOT SCALE: B

ECN: -

TITLE
EME520MD
ASSEMBLY 'A'
ALT. CONNECTION DETAILS

DWG. NO.
60-022376-00B

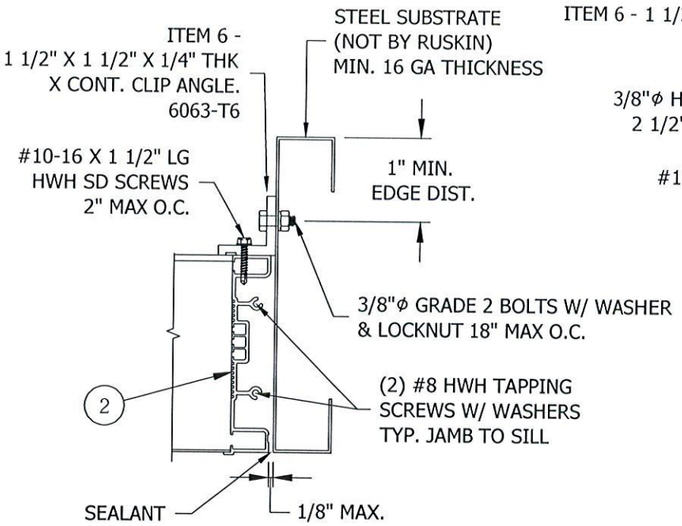

2B — ASSEMBLY "A" ALTERNATE CONNECTION

N.T.S.
STEEL SUBSTRATE (NOT BY RUSKIN)
MIN. 16 GAUGE THICKNESS

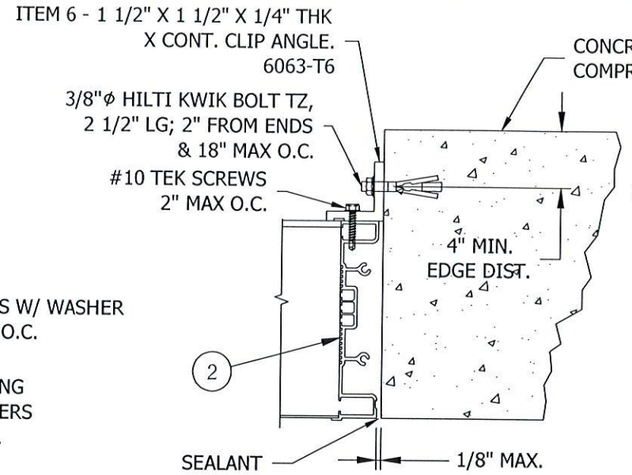

2C — ASSEMBLY "A" ALTERNATE CONNECTION

N.T.S.
3000 PSI MIN COMPRESSIVE STRENGTH

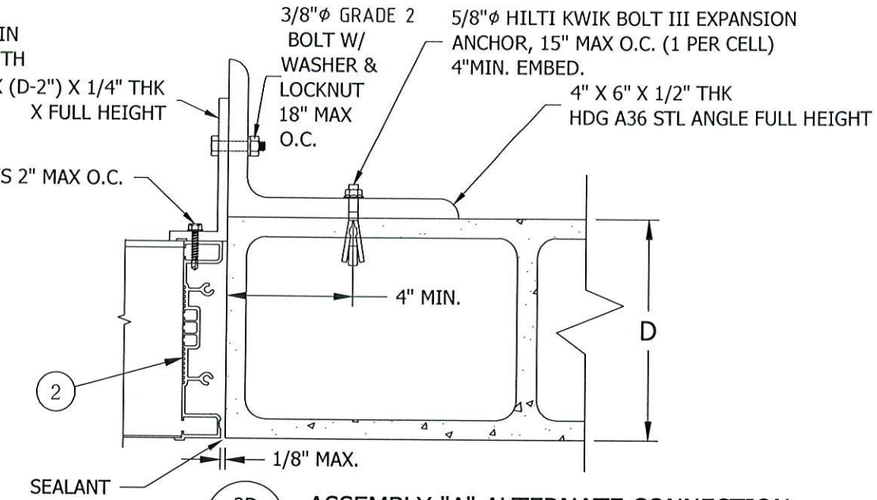

2D — ASSEMBLY "A" ALTERNATE CONNECTION

N.T.S.
GROUT FILLED CMU BLOCK PER NOTE #9

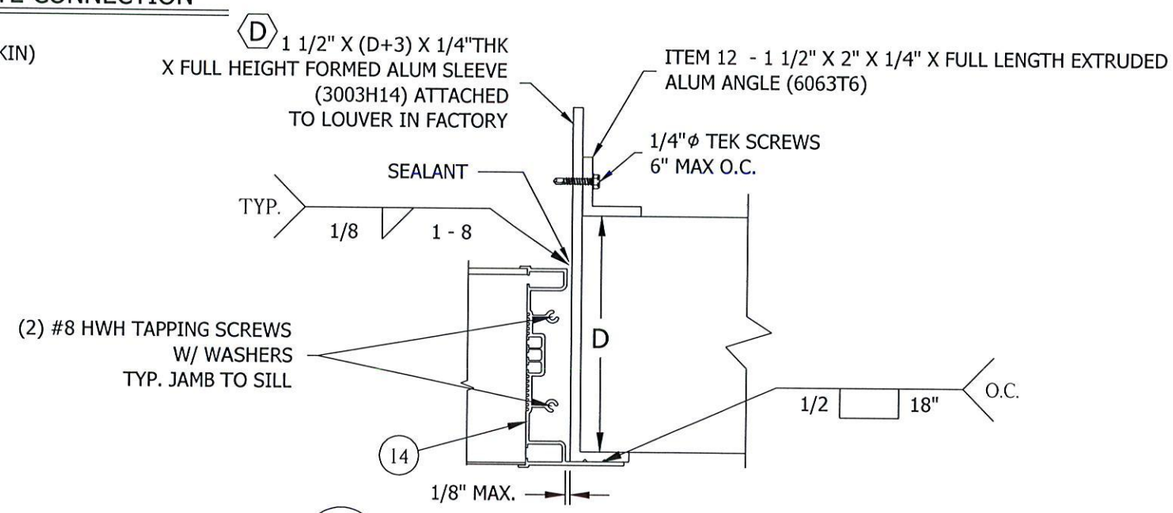

2E — ASSEMBLY "A" ALTERNATE CONNECTION

N.T.S.
FLANGE FRAME CONNECTION DETAIL

ENGINEER OF RECORD	CHELSEA GQ.WELCH
ENGINEERING DISCIPLINE	CIVIL ENGINEERING
REGISTRATION NUMBER	TX# 117359

STATE OF TEXAS
CHELSEA G. WELCH
117359
LICENSED
PROFESSIONAL ENGINEER
1/29/2016

FOR OFFICE USE ONLY

FOR OFFICE USE ONLY

TOLERANCES:
DECIMAL DIMENSIONS:
3 PLACE .XXX +.010
2 PLACE .XX +.020
FRACTION DIMENSIONS: + 1/16
ANGLE DIMENSIONS + 2°
USE WQ-007 & 008
UNLESS SPECIFIED OTHERWISE

DWN. BY:	CHK. BY:	APPV'D. BY:	APPV'D. BY:
J-W	CGW	CGW	
DATE: 10/10/14	DATE: 10/10/14	DATE: 10/10/14	DATE:

SHEET 4 OF 21

CHANGE LETTER	REVISION DESCRIPTION	DWN. BY:	CHK'D. BY:	APPV'D. BY:	APPV'D. BY:	DATE

RUSKIN
Air & Sound Control
3900 DR. GREAVES RD
GRANDVIEW, MO 64030

PLOT SCALE: B

ECN: -

TITLE
EME520MD
ASSEMBLY 'A'
ALT. CONNECTION DETAILS

DWG. NO.
60-022376-00B

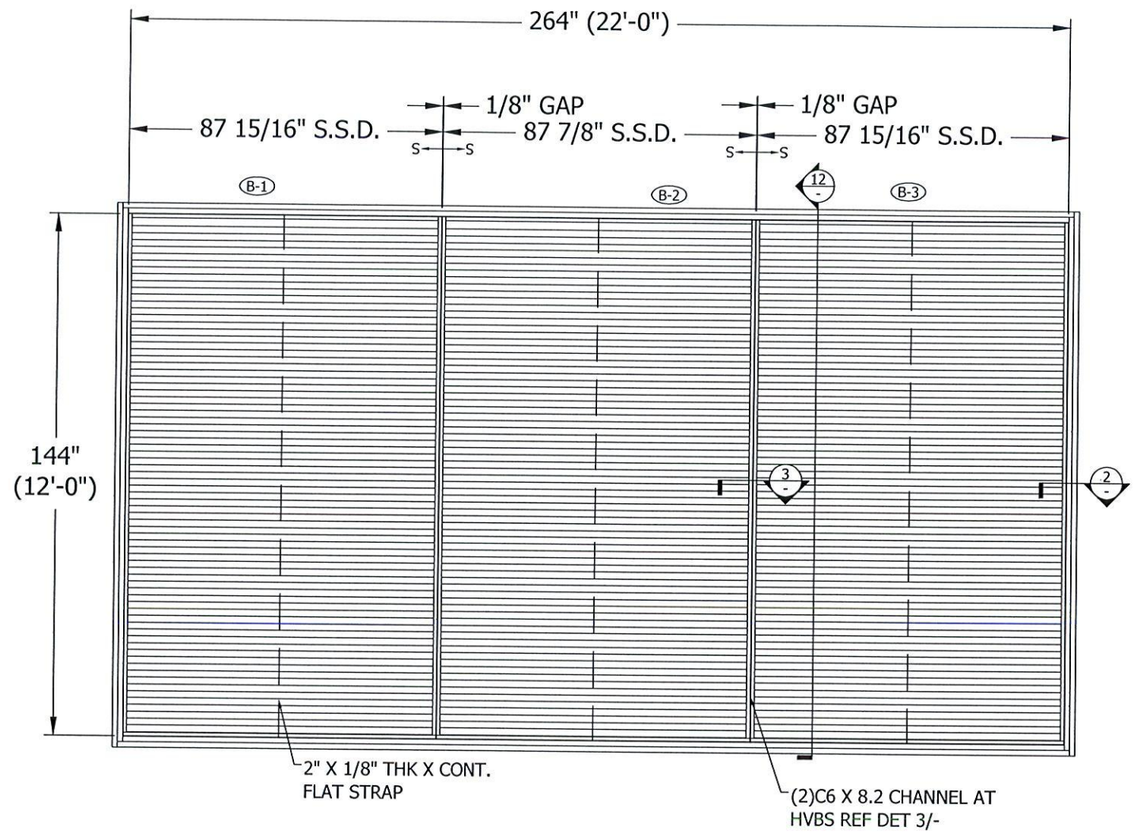

ASSEMBLY "B"

N.T.S.

EME520MD

FRONT VIEW

ENGINEER OF RECORD	CHELSEA GQ.WELCH
ENGINEERING DISCIPLINE	CIVIL ENGINEERING
REGISTRATION NUMBER	TX# 117359

STATE OF TEXAS
CHELSEA G. WELCH
117359
LICENSED
PROFESSIONAL ENGINEER

1/29/2016

FOR OFFICE USE ONLY

FOR OFFICE USE ONLY

TOLERANCES
DECIMAL DIMENSIONS:
3 PLACE .XXX +.010_
2 PLACE .XX +.020_
FRACTION DIMENSIONS: + 1/16
ANGLE DIMENSIONS + 2°_
USE W/Q-007 & 008
UNLESS SPECIFIED OTHERWISE

DWN. BY:	CHK. BY:	APPV'D. BY:	APPV'D. BY:
J-W	CGW	CGW	
DATE: 10/10/14	DATE: 10/10/14	DATE: 10/10/14	DATE:

SHEET 5 OF 21

CHANGE LETTER	REVISION DESCRIPTION	DWN. BY:	CHK'D. BY:	APPV'D. BY:	APPV'D. BY:	DATE

RUSKIN
Air & Sound Control
3900 DR. GREAVES RD
GRANDVIEW, MO 64030

PLOT SCALE: B

ECN: -

TITLE: EME520MD ASSEMBLY 'B'

DWG. NO. 60-022376-00B

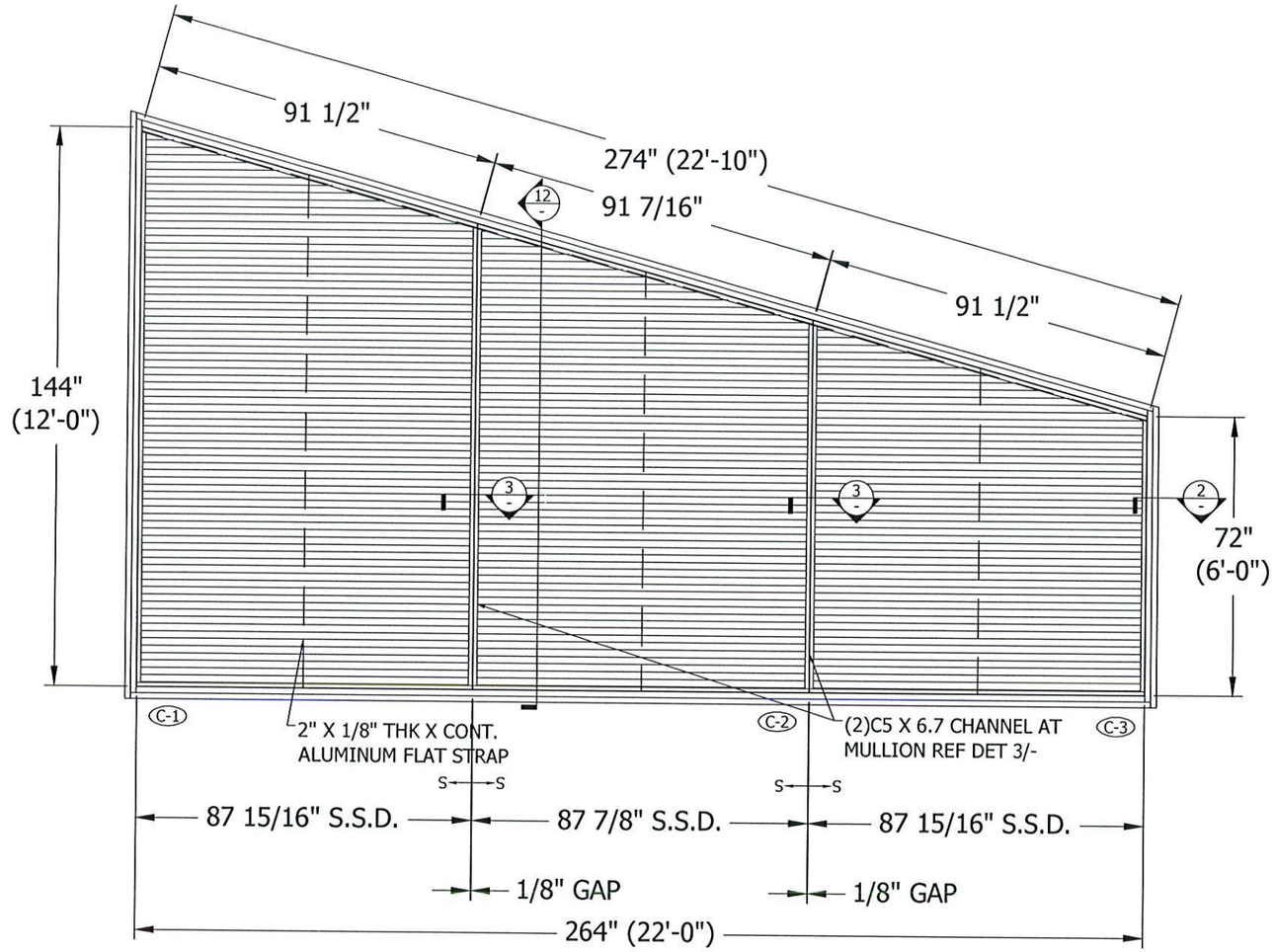

ASSEMBLY "C"

N.T.S.

EME520MD

FRONT VIEW

ENGINEER OF RECORD	CHELSEA GQ.WELCH
ENGINEERING DISCIPLINE	CIVIL ENGINEERING
REGISTRATION NUMBER	TX# 117359

STATE OF TEXAS
CHELSEA G. WELCH
117359
LICENSED
PROFESSIONAL ENGINEER
1/29/2016

FOR OFFICE USE ONLY

FOR OFFICE USE ONLY

TOLERANCES
DECIMAL DIMENSIONS:
3 PLACE .XXX +.010_
2 PLACE .XX +.020_
FRACTION DIMENSIONS: + 1/16
ANGLE DIMENSIONS + 2°_
USE WIQ-007 & 008
UNLESS SPECIFIED OTHERWISE

DWN. BY:	CHK. BY:	APPV'D. BY:	APPV'D. BY:
J-W	CGW	CGW	
DATE: 10/10/14	DATE: 10/10/14	DATE: 10/10/14	DATE:

SHEET 6 of 21

CHANGE LETTER	REVISION DESCRIPTION	DWN. BY:	CHK'D. BY:	APPV'D. BY:	APPV'D. BY:	DATE

RUSKIN
Air & Sound Control
3900 DR. GREAVES RD
GRANDVIEW, MO 64030

PLOT SCALE: B

ECN: -

TITLE: EME520MD ASSEMBLY "C"

DWG. NO. 60-022376-00B

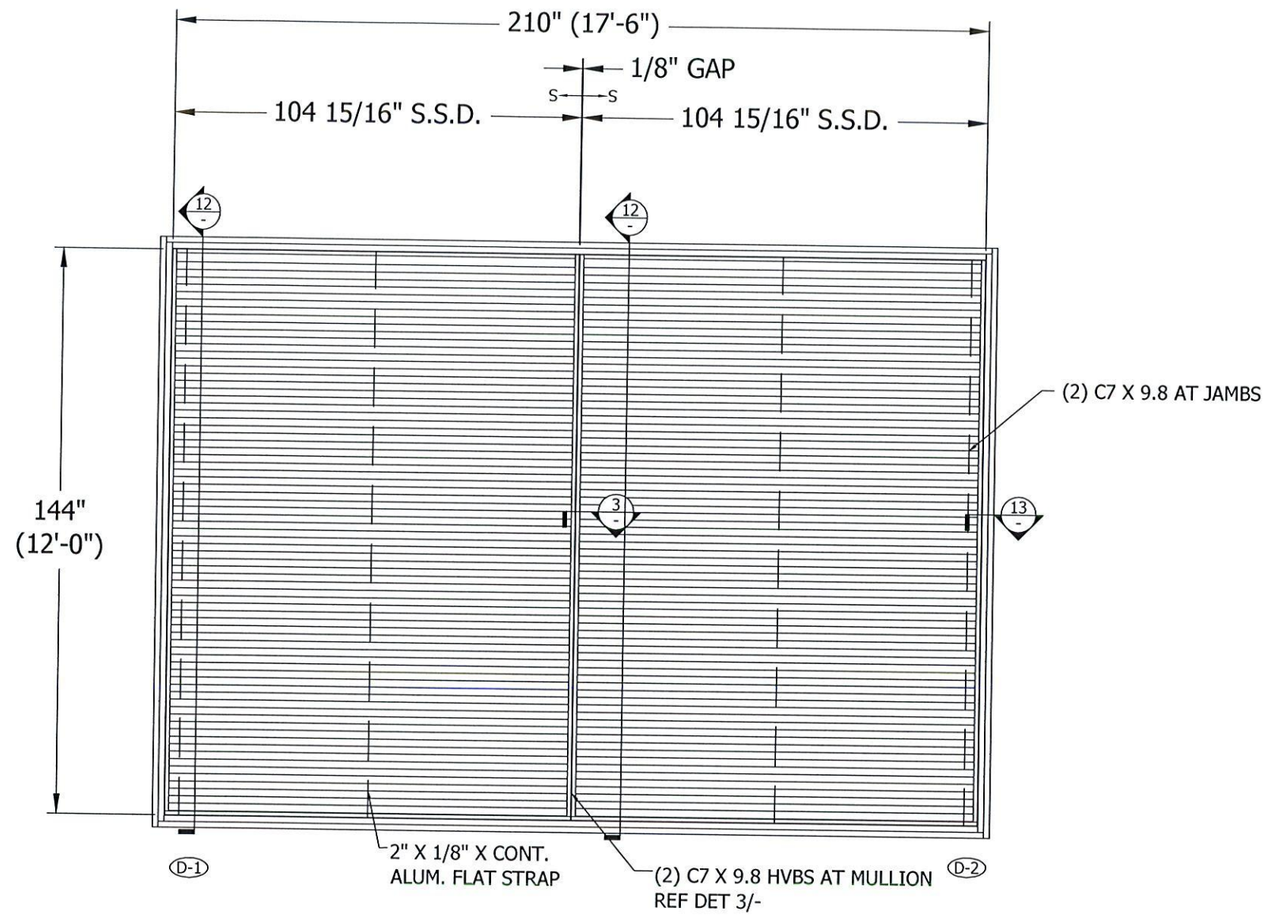

ASSEMBLY "D"

N.T.S.

EME520MD

FRONT VIEW

ENGINEER OF RECORD	CHELSEA GQ.WELCH
ENGINEERING DISCIPLINE	CIVIL ENGINEERING
REGISTRATION NUMBER	TX# 117359

STATE OF TEXAS
CHELSEA G. WELCH
117359
LICENSED
PROFESSIONAL ENGINEER
1/29/2016

FOR OFFICE USE ONLY

FOR OFFICE USE ONLY

TOLERANCES
DECIMAL DIMENSIONS:
3 PLACE .XXX +.010_
2 PLACE .XX +.020_
FRACTION DIMENSIONS: + 1/16
ANGLE DIMENSIONS + 2°
USE WIQ-007 & 008
UNLESS SPECIFIED OTHERWISE

DWN. BY:	CHK. BY:	APPV'D. BY:	APPV'D. BY:
J-W	CGW	CGW	
DATE: 6/11/12	DATE: 10/10/14	DATE: 10/10/14	DATE:

SHEET 7 of 21

CHANGE LETTER	REVISION DESCRIPTION	DWN. BY:	CHK'D. BY:	APPV'D. BY:	APPV'D. BY:	DATE

RUSKIN
Air & Sound Control
3900 DR. GREAVES RD
GRANDVIEW, MO 64030

PLOT SCALE: B

ECN: -

TITLE: EME520MD ASSEMBLY "D"

DWG. NO. 60-022376-00B

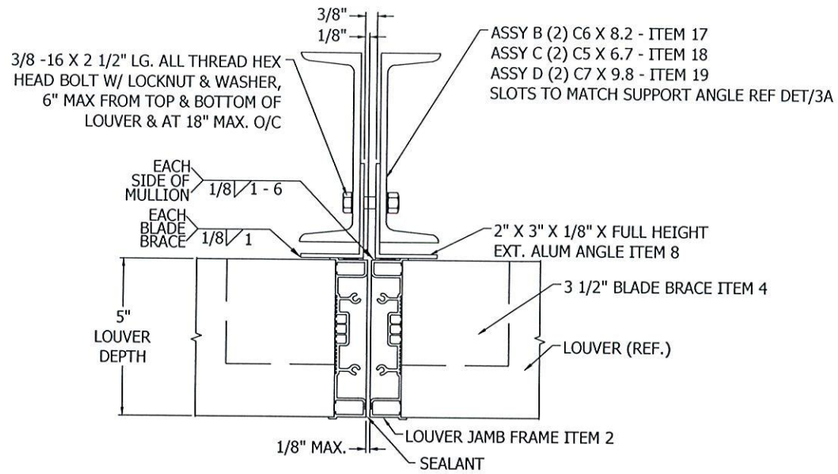

3 / - VISIBLE MULLION SUPPORT DETAIL

N.T.S.
ATTACHMENT CLIPS NOT SHOWN FOR CLARITY

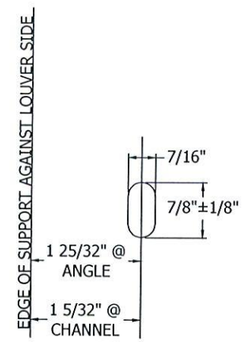

3A / - SLOT DETAIL

N.T.S.

* FOR SMALLER ASSEMBLIES REFERENCE SUPPORT TABLES ON SHEET 21 OF 21.

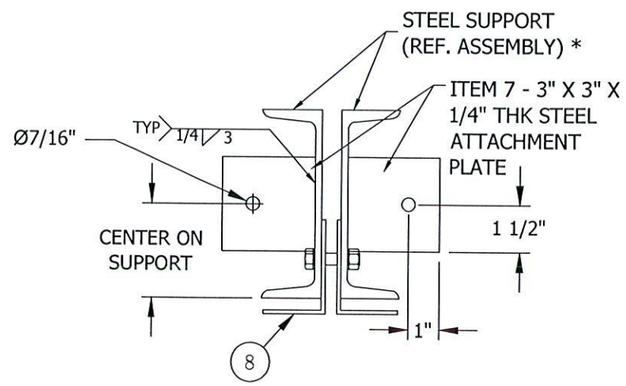

4 / - MULLION SUPPORT ATTACHMENT PLATE

N.T.S.
WOOD STRUCTURE

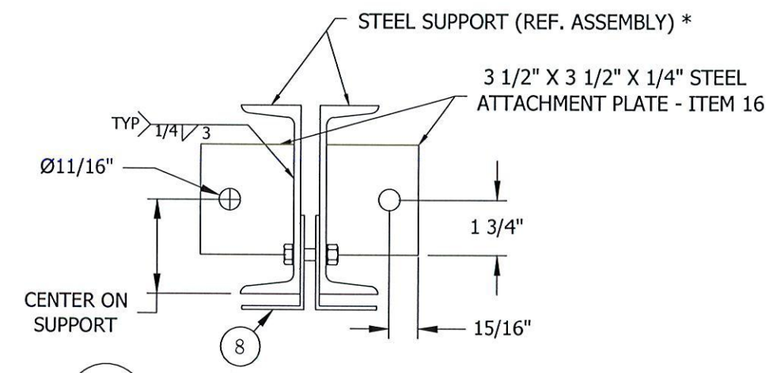

4A / - MULLION SUPPORT ATTACHMENT PLATE

N.T.S.
STEEL, CONCRETE, & CMU STRUCTURE

ENGINEER OF RECORD
CHELSEA GQ.WELCH
ENGINEERING DISCIPLINE
CIVIL ENGINEERING
REGISTRATION NUMBER
TX# 117359

STATE OF TEXAS
CHELSEA G. WELCH
117359
LICENSED
PROFESSIONAL ENGINEER
1/29/2016

FOR OFFICE USE ONLY

FOR OFFICE USE ONLY

TOLERANCES
DECIMAL DIMENSIONS:
3 PLACE .XXX +.010_
2 PLACE .XX +.020_
FRACTION DIMENSIONS: + 1/16
ANGLE DIMENSIONS + 2°_
USE WIQ-007 & 008
UNLESS SPECIFIED OTHERWISE

DWN. BY:	CHK. BY:	APPV'D. BY:	APPV'D. BY:
J-W	CGW	CGW	
DATE: 10/10/14	DATE: 10/10/14	DATE: 10/10/14	DATE:

SHEET 8 OF 21

CHANGE LETTER	REVISION DESCRIPTION	DWN. BY:	CHK'D. BY:	APPV'D. BY:	APPV'D. BY:	DATE

RUSKIN
Air & Sound Control
3900 DR. GREAVES RD
GRANDVIEW, MO 64030

PLOT SCALE: B

ECN: -

TITLE
EME520MD
ASSEMBLY 'B, C, & D'
DETAILS

DWG. NO.
60-022376-00B

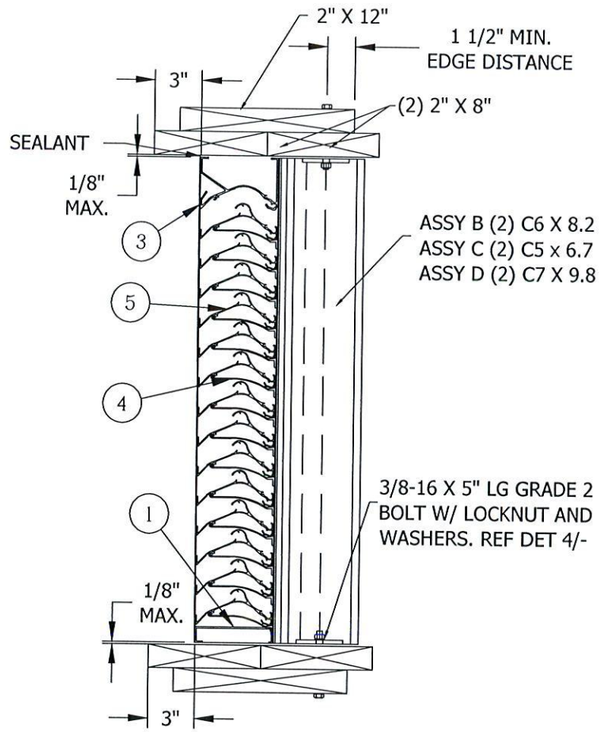

12 - MULLION SUPPORT ATTACHMENT EME520MD

N.T.S. SECTION VIEW

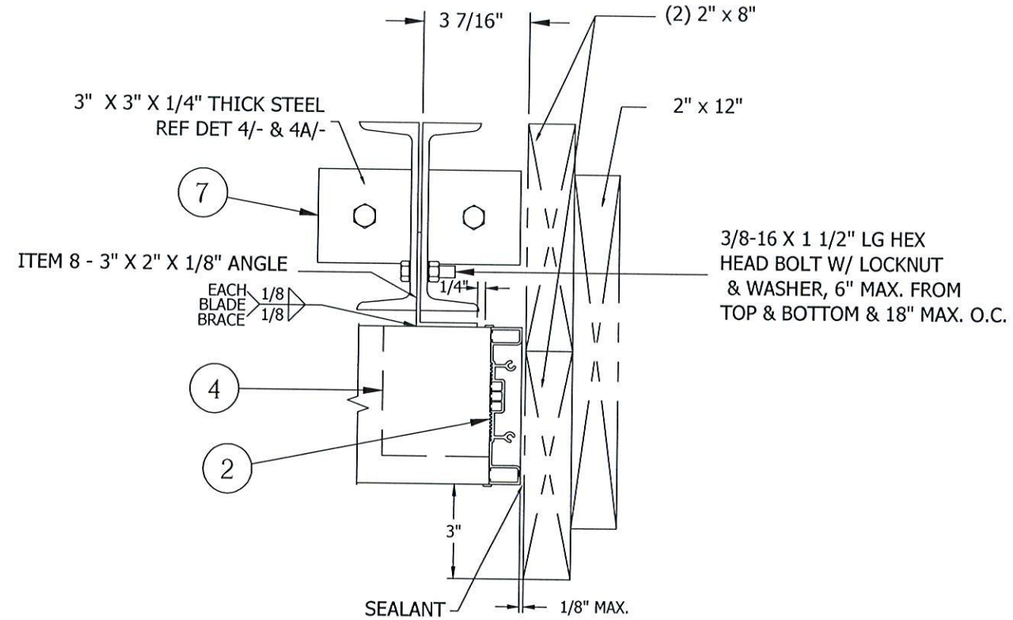

13 - JAMB INSTALLATION (ASSEMBLY 'D' ONLY)

N.T.S.
OPPOSITE JAMB SIMILAR

ENGINEER OF RECORD
CHELSEA GQ.WELCH
ENGINEERING DISCIPLINE
CIVIL ENGINEERING
REGISTRATION NUMBER
TX# 117359

STATE OF TEXAS
CHELSEA G. WELCH
117359
LICENSED
PROFESSIONAL ENGINEER
1/29/2016

FOR OFFICE USE ONLY

FOR OFFICE USE ONLY

TOLERANCES
DECIMAL DIMENSIONS:
3 PLACE .XXX ± .010
2 PLACE .XX ± .020
FRACTION DIMENSIONS: ± 1/16
ANGLE DIMENSIONS ± 2°
USE WIQ-007 & 008
UNLESS SPECIFIED OTHERWISE

DWN. BY:	CHK. BY:	APPV'D. BY:	APPV'D. BY:
J-W	CGW	CGW	
DATE: 10/10/14	DATE: 10/10/14	DATE: 10/10/14	DATE:

SHEET 9 OF 21

CHANGE LETTER	REVISION DESCRIPTION	DWN. BY:	CHK'D. BY:	APPV'D. BY:	APPV'D. BY:	DATE

RUSKIN
Air & Sound Control
3900 DR. GREAVES RD
GRANDVIEW, MO 64030

PLOT SCALE: B

ECN: -

TITLE
EME520MD
ASSEMBLY 'B, C, & D' DETAILS

DWG. NO.
60-022376-00B

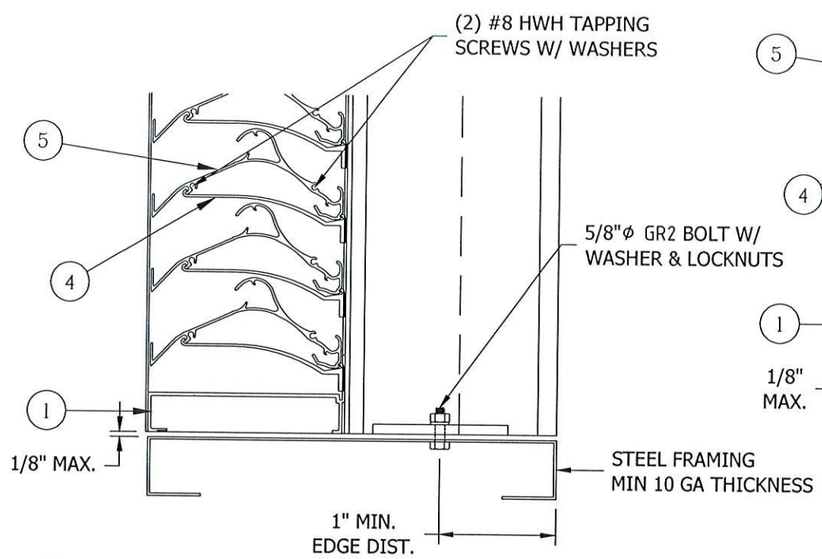

12A / - MULLION SUPPORT ATTACHMENT - STEEL STRUCTURE

N.T.S.
STEEL STRUCTURE MIN. 10 GA THICKNESS

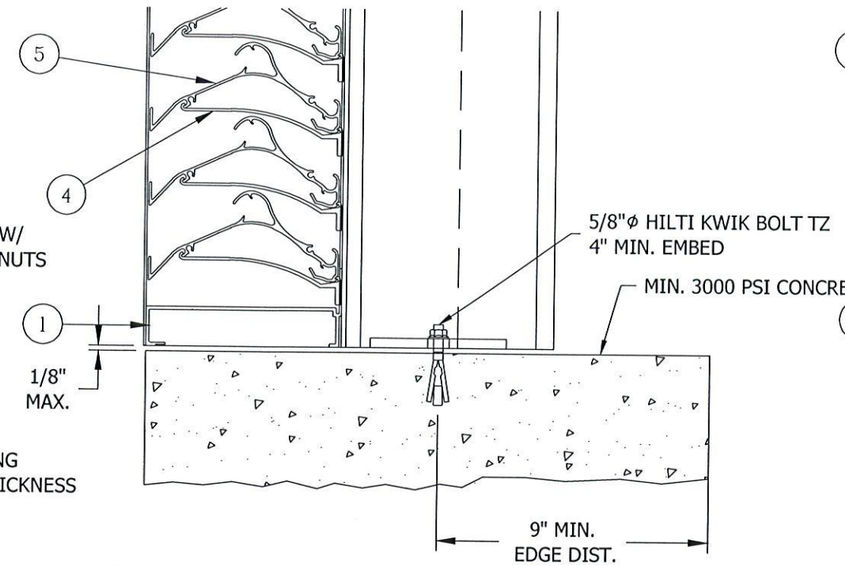

12B / - MULLION SUPPORT ATTACHMENT- CONCRETE STRUCTURE

N.T.S.
MIN. 3000 PSI CONCRETE

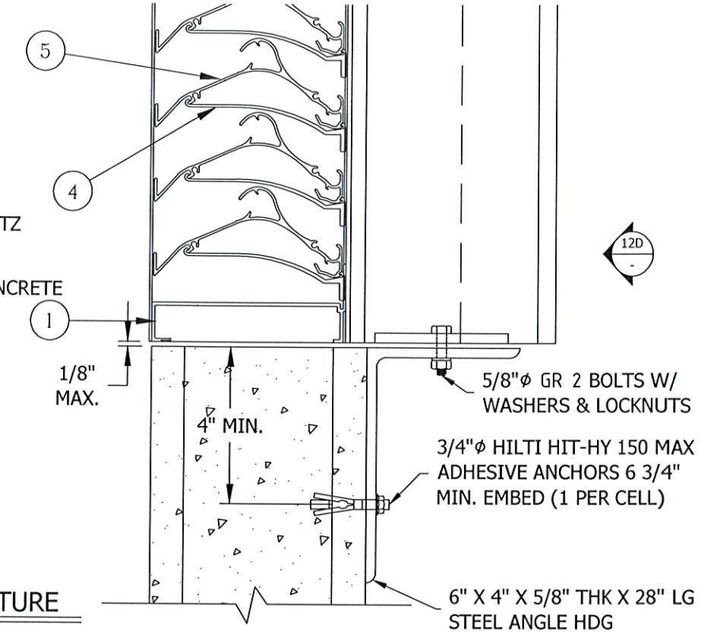

12C / - MULLION SUPPORT - CMU STRUCTURE

N.T.S.
GROUT FILLED CMU - REF. NOTE 9

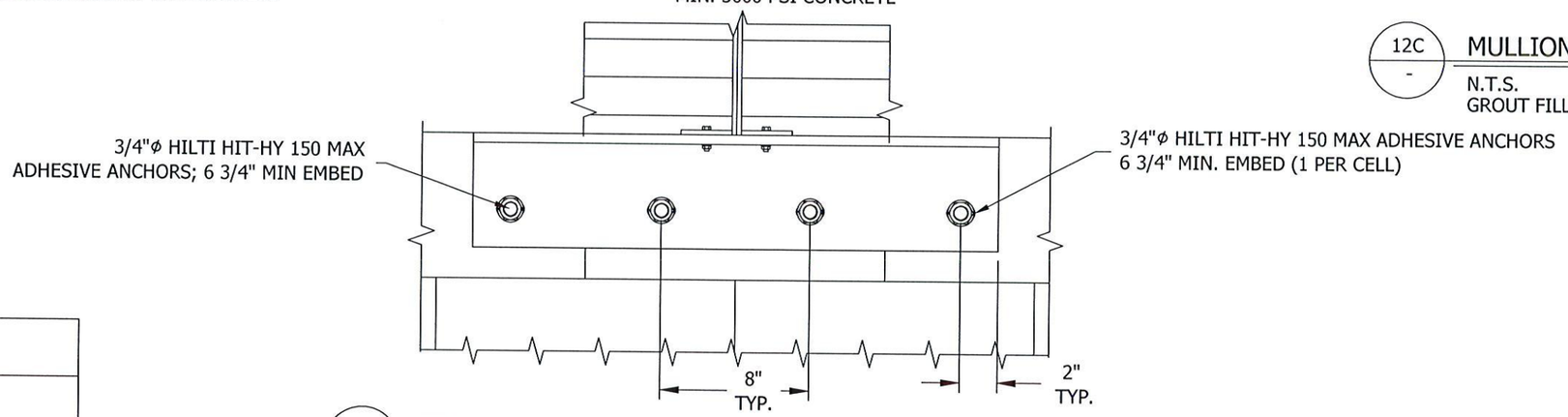

12D / - MULLION SUPPORT ATTACHMENT - CMU STRUCTURE REAR

N.T.S.
GROUT FILLED CMU - REF. NOTE 9

ENGINEER OF RECORD
CHELSEA GQ.WELCH
ENGINEERING DISCIPLINE
CIVIL ENGINEERING
REGISTRATION NUMBER
TX# 117359

STATE OF TEXAS
CHELSEA G. WELCH
117359
LICENSED
PROFESSIONAL ENGINEER
1/29/2016

FOR OFFICE USE ONLY

FOR OFFICE USE ONLY

TOLERANCES
DECIMAL DIMENSIONS:
3 PLACE .XXX +.010_
2 PLACE .XX +.020_
FRACTION DIMENSIONS: + 1/16
ANGLE DIMENSIONS + 2°_
USE WIQ-007 & 008
UNLESS SPECIFIED OTHERWISE

DWN. BY:	CHK. BY:	APPV'D. BY:	APPV'D. BY:
J-W	CGW	CGW	
DATE: 10/10/14	DATE: 10/10/14	DATE: 10/10/14	DATE:

SHEET 10 OF 21

CHANGE LETTER	REVISION DESCRIPTION	DWN. BY:	CHK'D. BY:	APPV'D. BY:	APPV'D. BY:	DATE

RUSKIN
Air & Sound Control
3900 DR. GREAVES RD
GRANDVIEW, MO 64030

PLOT SCALE: B

ECN: -

TITLE
EME520MD
ASSEMBLY 'B,C,D'
ALT. CONNECTION DETAILS

DWG. NO.
60-022376-00B

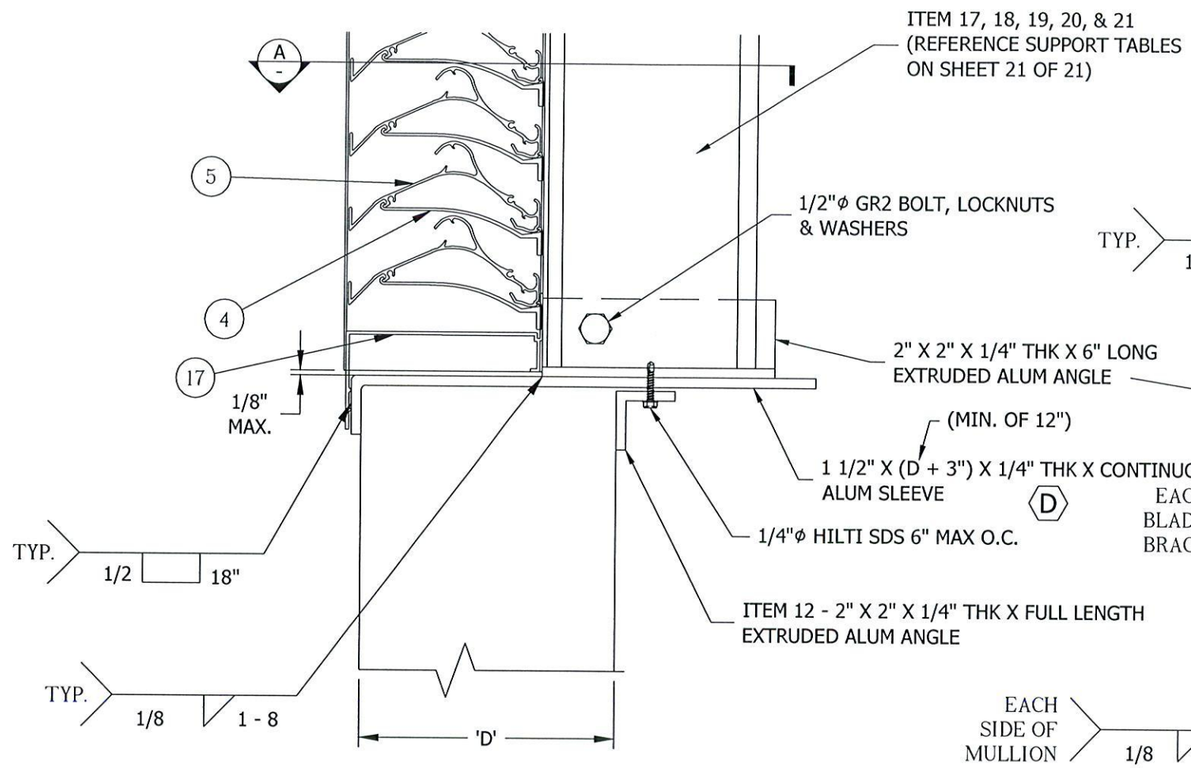

12E
-

ASSEMBLY "B,C,D" ALTERNATE CONNECTION

N.T.S.
FLANGE FRAME CONNECTION DETAIL

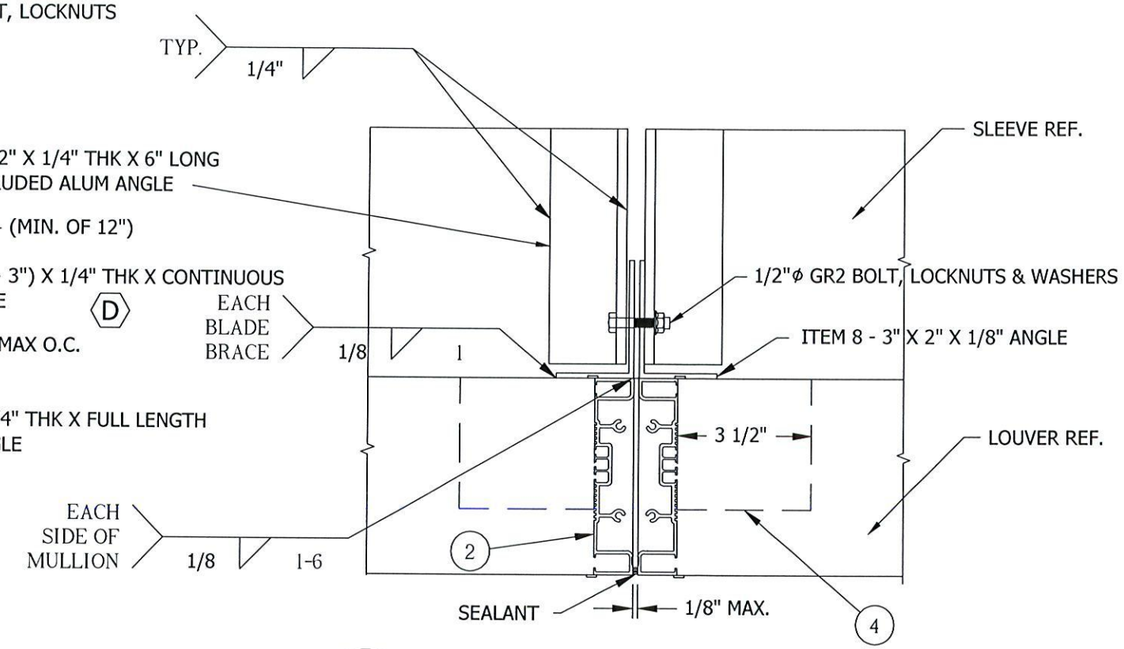

A
-

ASSEMBLY "B,C,D" ALTERNATE CONNECTION

N.T.S.
CHANNELS NOT SHOWN FOR CLARITY

ENGINEER OF RECORD
CHELSEA GQ.WELCH
ENGINEERING DISCIPLINE
CIVIL ENGINEERING
REGISTRATION NUMBER
TX# 117359

STATE OF TEXAS
CHELSEA G. WELCH
117359
LICENSED
PROFESSIONAL ENGINEER
1/29/2016

FOR OFFICE USE ONLY

FOR OFFICE USE ONLY

TOLERANCES
DECIMAL DIMENSIONS:
3 PLACE .XXX ± .010
2 PLACE .XX ± .020
FRACTION DIMENSIONS: ± 1/16
ANGLE DIMENSIONS ± 2°
USE W1Q-007 & 008
UNLESS SPECIFIED OTHERWISE

DWN. BY:	CHK. BY:	APPV'D. BY:	APPV'D. BY:
J-W	CGW	CGW	
DATE: 10/10/14	DATE: 10/10/14	DATE: 10/10/14	DATE:

SHEET 11 OF 21

CHANGE LETTER	REVISION DESCRIPTION	DWN. BY:	CHK'D. BY:	APPV'D. BY:	APPV'D. BY:	DATE

RUSKIN
Air & Sound Control
3900 DR. GREAVES RD
GRANDVIEW, MO 64030

PLOT SCALE: B

ECN: -

TITLE
EME520MD
ASSEMBLY 'B,C,D'
ALT. CONNECTION DETAILS

DWG. NO.
60-022376-00B

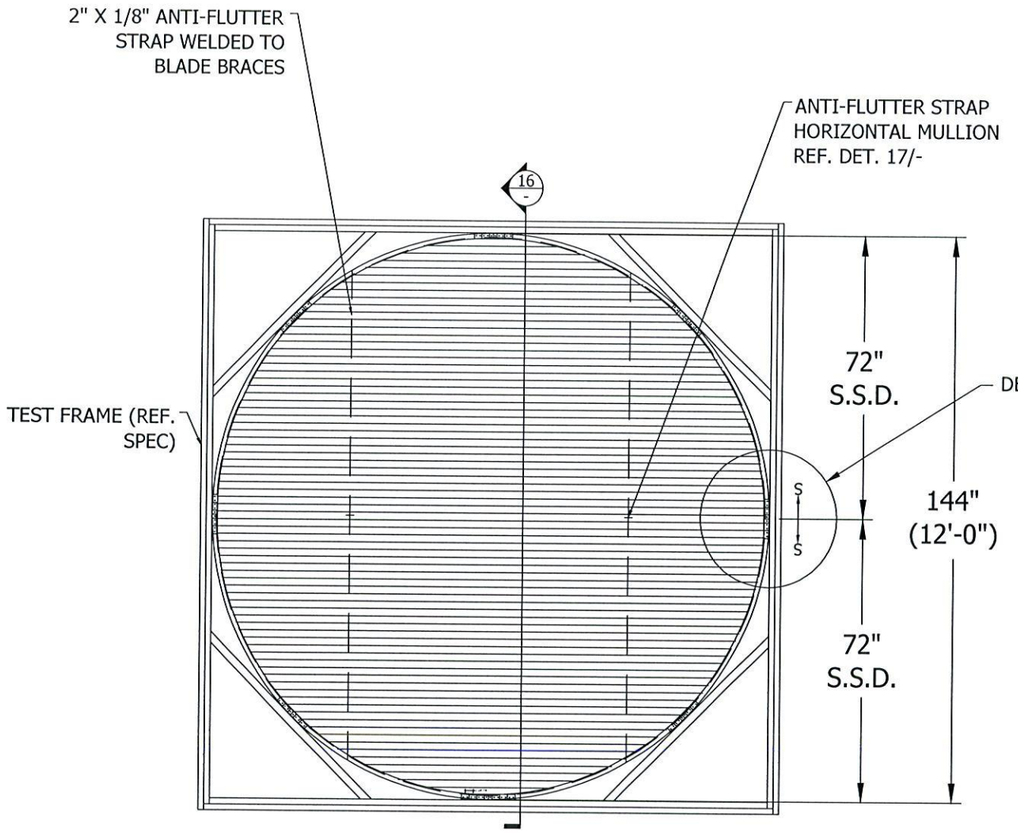

ASSEMBLY "E"

N.T.S.

EME520MD

FRONT VIEW

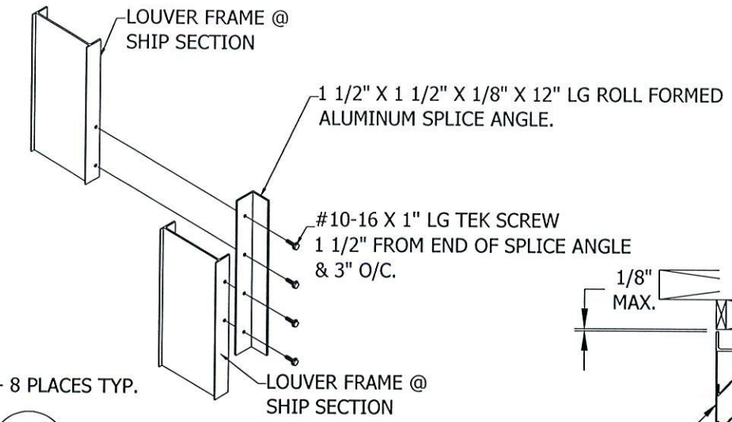

18 - JAMB SPLICE DETAIL

N.T.S.

FACE VIEW

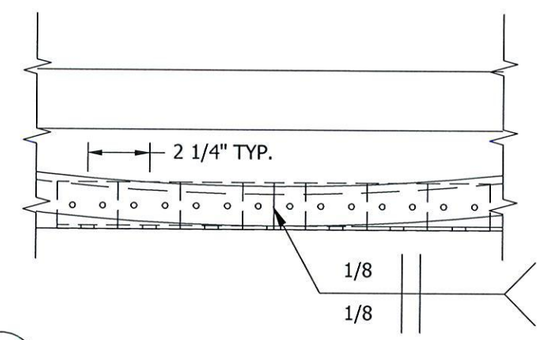

15 - LOUVER ATTACHMENT DETAIL

N.T.S.

FACE VIEW

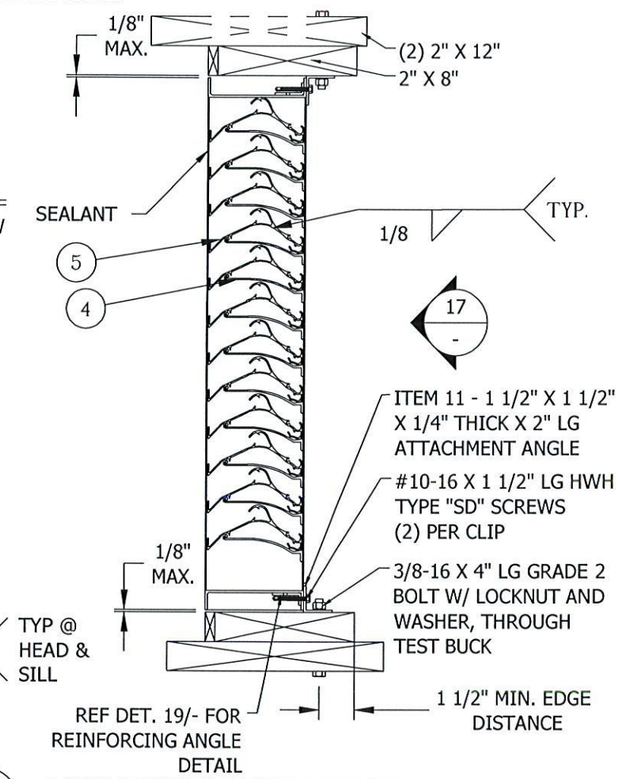

16 - ASSEMBLY "E" INSTALLATION

N.T.S.

EME520MD

SECTION VIEW

ENGINEER OF RECORD	CHELSEA GQ.WELCH
ENGINEERING DISCIPLINE	CIVIL ENGINEERING
REGISTRATION NUMBER	TX# 117359

STATE OF TEXAS
CHELSEA G. WELCH
117359
LICENSED
PROFESSIONAL ENGINEER

1/27/2016

FOR OFFICE USE ONLY

FOR OFFICE USE ONLY

TOLERANCES
DECIMAL DIMENSIONS:
3 PLACE .XXX ± .010
2 PLACE .XX ± .020
FRACTION DIMENSIONS: ± 1/16
ANGLE DIMENSIONS ± 2°
USE W10-007 & 008
UNLESS SPECIFIED OTHERWISE

DWN. BY:	CHK. BY:	APPV'D. BY:	APPV'D. BY:
J-W	CGW	CGW	
DATE: 10/10/14	DATE: 10/10/14	DATE: 10/10/14	DATE:

SHEET 12 OF 21

CHANGE LETTER	REVISION DESCRIPTION	DWN. BY:	CHK'D. BY:	APPV'D. BY:	APPV'D. BY:	DATE

RUSKIN
Air & Sound Control
3900 DR. GREAVES RD
GRANDVIEW, MO 64030

PLOT SCALE: B

ECN: -

TITLE: EME520MD ASSEMBLY "E"

DWG. NO. 60-022376-00B

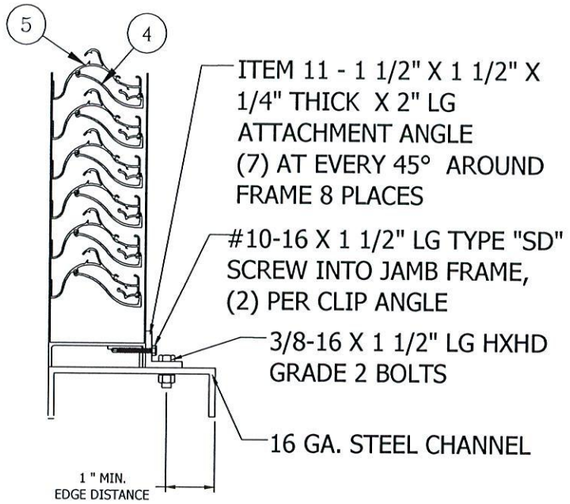

16B / - STEEL STRUCTURE

N.T.S.
MIN. 16 GA THICKNESS

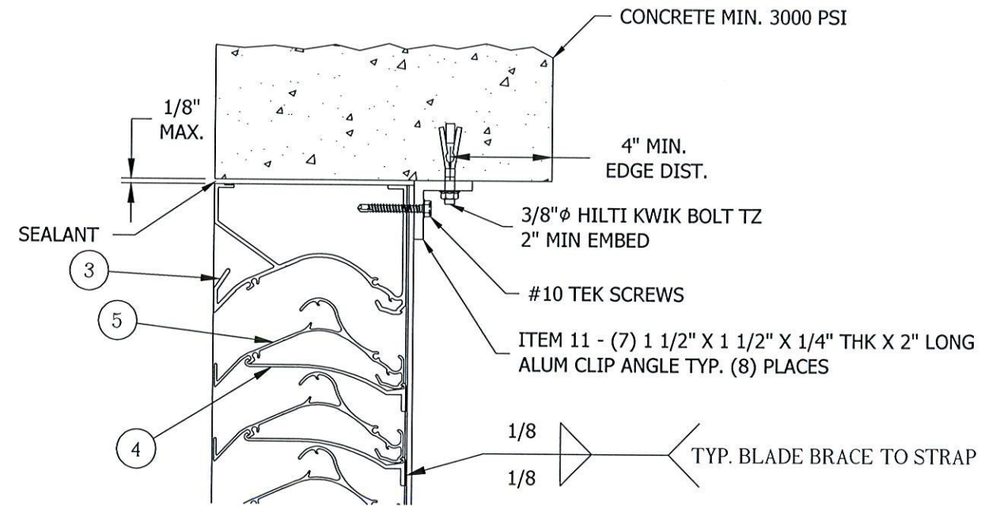

16C / - ASSEMBLY "E" CONNECTION - CONCRETE STRUCTURE

N.T.S.
MIN 3000 PSI CONCRETE

ENGINEER OF RECORD
CHELSEA GQ.WELCH

ENGINEERING DISCIPLINE
CIVIL ENGINEERING

REGISTRATION NUMBER
TX# 117359

STATE OF TEXAS
CHELSEA G. WELCH
117359
LICENSED
PROFESSIONAL ENGINEER
1/29/2016

FOR OFFICE USE ONLY

FOR OFFICE USE ONLY

TOLERANCES
DECIMAL DIMENSIONS:
3 PLACE .XXX +.010_
2 PLACE .XX +.020_
FRACTION DIMENSIONS: + 1/16
ANGLE DIMENSIONS + 2°_
USE W/O-007 & 008
UNLESS SPECIFIED OTHERWISE

DWN. BY:	CHK. BY:	APPV'D. BY:	APPV'D. BY:
J-W	CGW	CGW	
DATE: 10/10/14	DATE: 10/10/14	DATE: 10/10/14	DATE:

SHEET 13 OF 21

CHANGE LETTER	REVISION DESCRIPTION	DWN. BY:	CHK'D. BY:	APPV'D. BY:	APPV'D. BY:	DATE

RUSKIN
Air & Sound Control
3900 DR. GREAVES RD
GRANDVIEW, MO 64030

PLOT SCALE: B

ECN: -

TITLE
EME520MD
ASSEMBLY "E" DETAILS

DWG. NO.
60-022376-00B

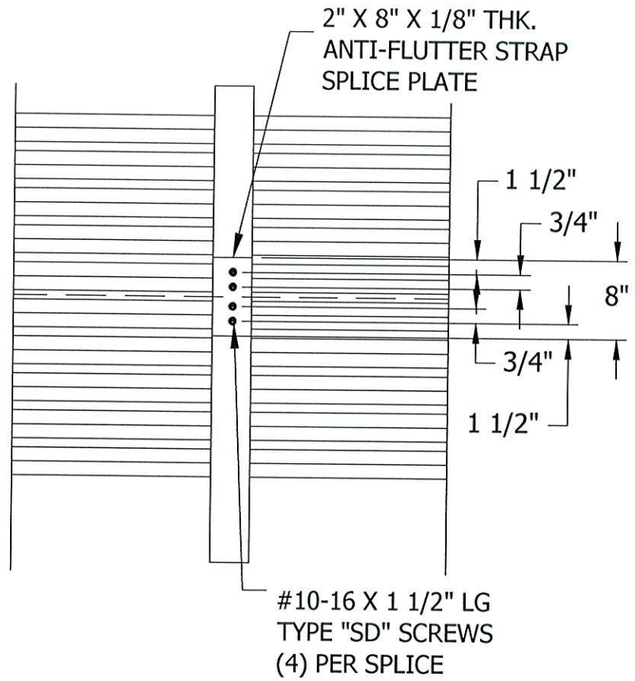

17 / - ANTI FLUTTER STRAP HORIZONTAL MULLION EME520MD

N.T.S. SECTION VIEW

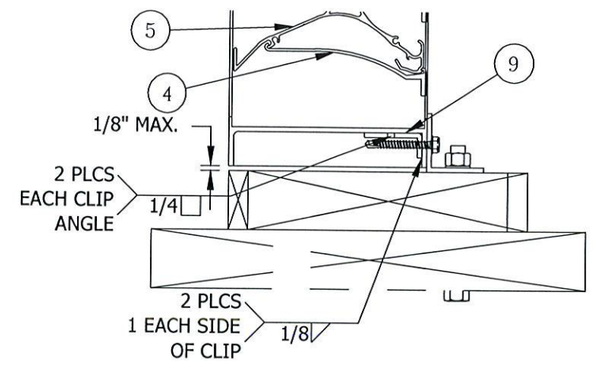

19 / - REINFORCING ANGLE WELD DETAIL

N.T.S.

ENGINEER OF RECORD
CHELSEA GQ.WELCH

ENGINEERING DISCIPLINE
CIVIL ENGINEERING

REGISTRATION NUMBER
TX# 117359

STATE OF TEXAS
CHELSEA G. WELCH
117359
LICENSED
PROFESSIONAL ENGINEER
1/29/2016

FOR OFFICE USE ONLY

FOR OFFICE USE ONLY

TOLERANCES
DECIMAL DIMENSIONS:
3 PLACE .XXX +.010_
2 PLACE .XX +.020_
FRACTION DIMENSIONS: + 1/16
ANGLE DIMENSIONS + 2°_
USE W10-007 & 008
UNLESS SPECIFIED OTHERWISE

DWN. BY: J-W	CHK. BY: CGW	APPV'D. BY: CGW	APPV'D. BY:
DATE: 10/10/14	DATE: 10/10/14	DATE: 10/10/14	DATE:

SHEET 14 OF 21

CHANGE LETTER	REVISION DESCRIPTION	DWN. BY:	CHK'D. BY:	APPV'D. BY:	APPV'D. BY:	DATE

RUSKIN
Air & Sound Control
3900 DR. GREAVES RD
GRANDVIEW, MO 64030

PLOT SCALE: B

ECN: -

TITLE
EME520MD
ASSEMBLY 'E'
ALT. CONNECTION DETAILS

DWG. NO.
60-022376-00B

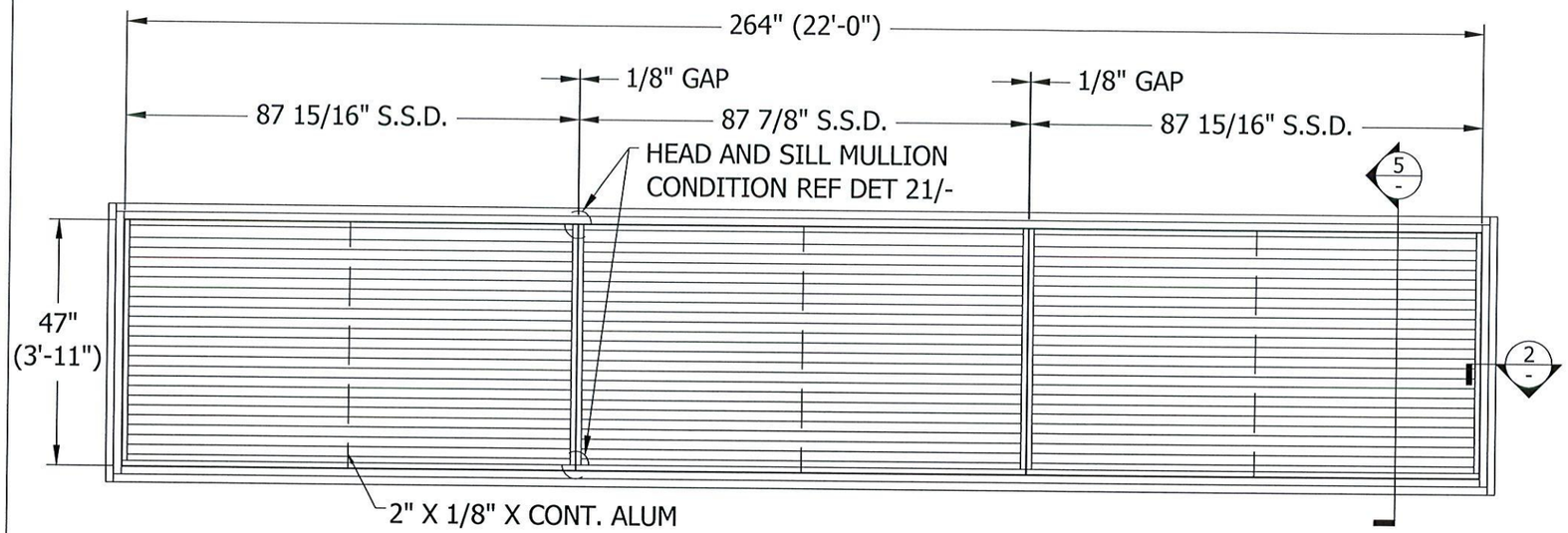

ASSEMBLY "F"

N.T.S.

EME520MD

FRONT VIEW

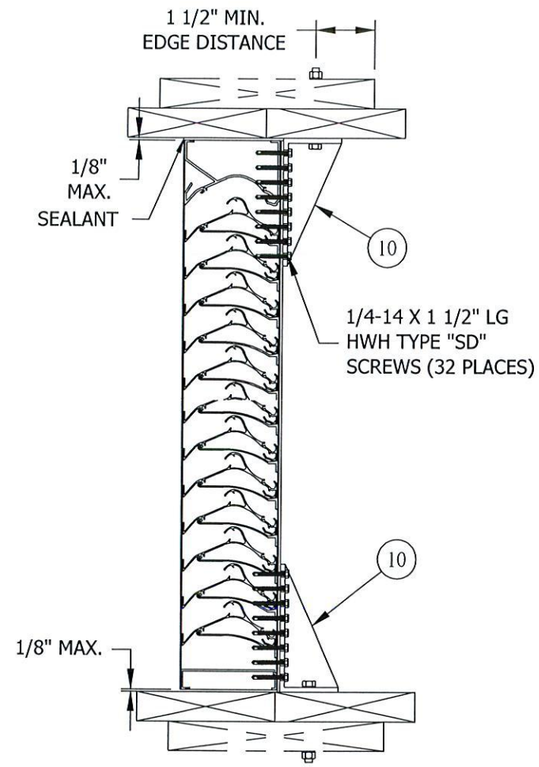

5 / - HEAD & SILL MULLION ATTACHMENT

N.T.S.
ASSEMBLY 'F'

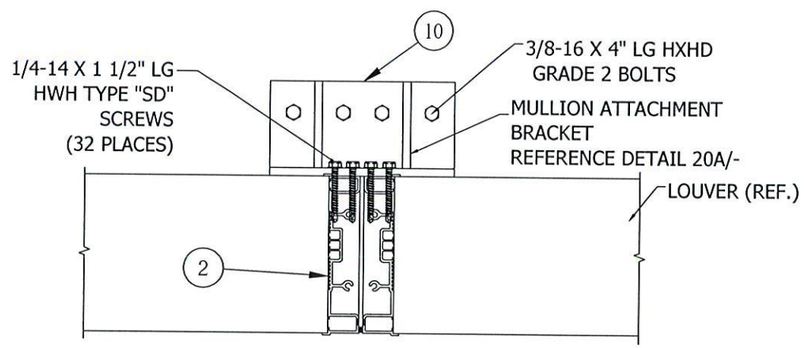

21 / - HEAD AND SILL MULLION ATTACHMENT - ASSY F

N.T.S.

ENGINEER OF RECORD	CHELSEA GQ.WELCH
ENGINEERING DISCIPLINE	CIVIL ENGINEERING
REGISTRATION NUMBER	TX# 117359

STATE OF TEXAS
CHELSEA G. WELCH
117359
LICENSED
PROFESSIONAL ENGINEER
1/29/2016

FOR OFFICE USE ONLY

FOR OFFICE USE ONLY

TOLERANCES
DECIMAL DIMENSIONS:
3 PLACE .XXX +.010_
2 PLACE .XX +.020_
FRACTION DIMENSIONS: + 1/16
ANGLE DIMENSIONS + 2°_
USE WID-007 & 008
UNLESS SPECIFIED OTHERWISE

DWN. BY:	CHK. BY:	APPV'D. BY:	APPV'D. BY:
J-W	CGW	CGW	
DATE: 10/10/14	DATE: 10/10/14	DATE: 10/10/14	DATE:

SHEET 15 OF 21

CHANGE LETTER	REVISION DESCRIPTION	DWN. BY:	CHK'D. BY:	APPV'D. BY:	APPV'D. BY:	DATE

RUSKIN
Air & Sound Control
3900 DR. GREAVES RD
GRANDVIEW, MO 64030

PLOT SCALE: B

ECN: -

TITLE: EME520MD
ASSEMBLY "F" & DETAILS

DWG. NO. 60-022376-00B

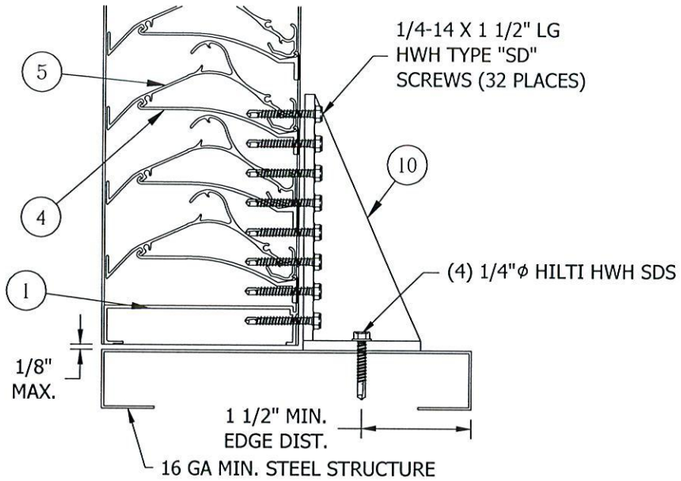

5A / - ASSEMBLY "F" STEEL STRUCTURE

N.T.S.
STEEL STRUCTURE
16 GA MIN. THICKNESS

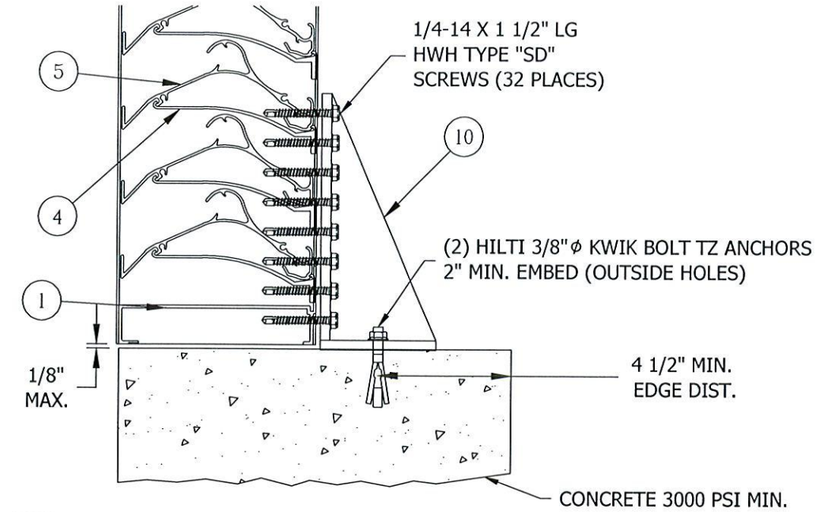

5B / - ASSEMBLY "F" CONCRETE STRUCTURE

N.T.S.
CONCRETE MIN. 3000 PSI

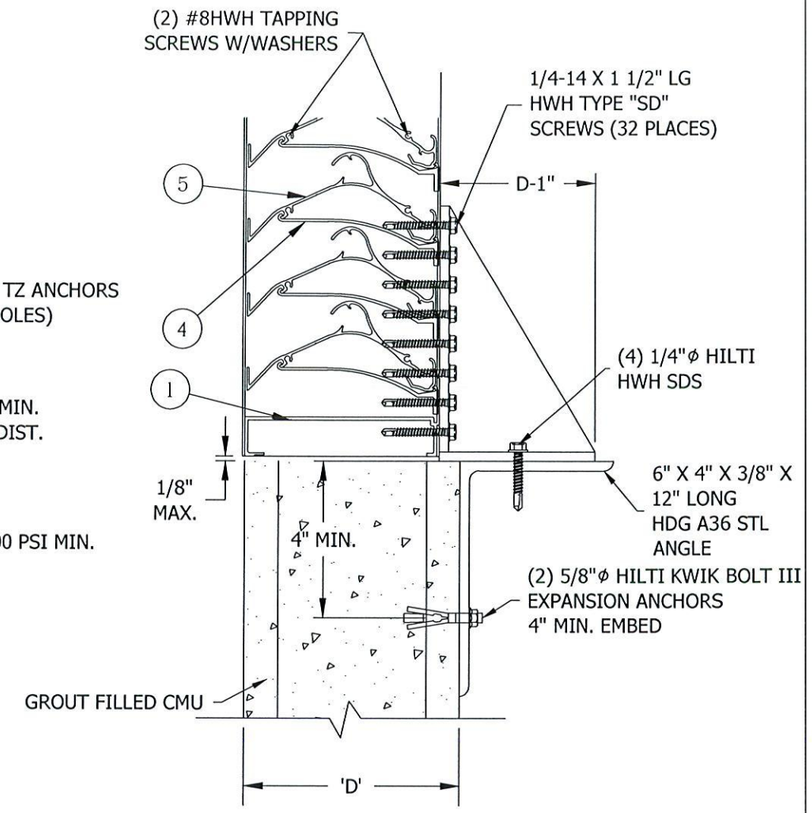

5C / - ASSEMBLY "F"CMU STRUCTURE

N.T.S.
GROUT FILLED CMU REF NOTE 9

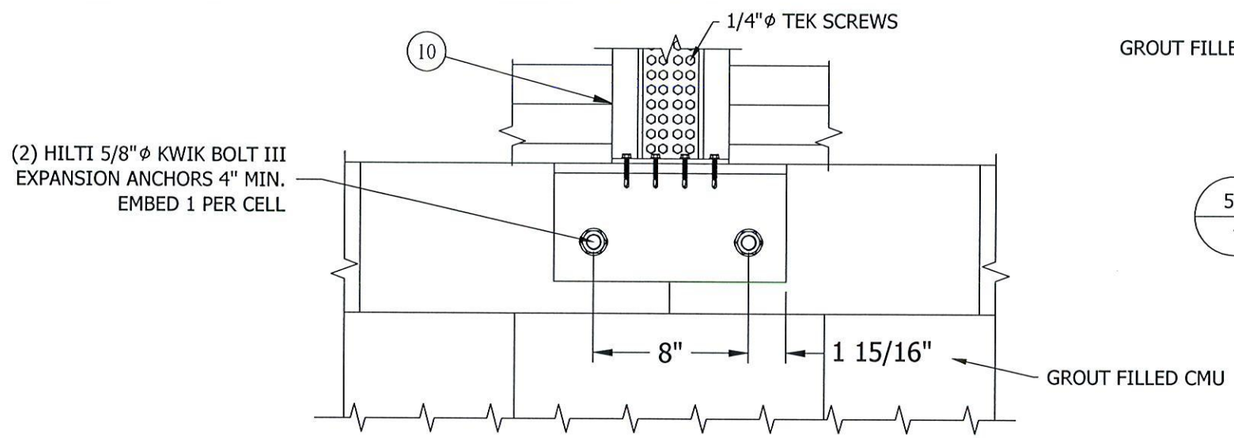

5D / - ASSEMBLY "F" CMU STRUCTURE

N.T.S.
GROUT FILLED CMU REF NOTE 9

ENGINEER OF RECORD
CHELSEA GQ.WELCH
ENGINEERING DISCIPLINE
CIVIL ENGINEERING
REGISTRATION NUMBER
TX# 117359

STATE OF TEXAS
CHELSEA G. WELCH
117359
LICENSED
PROFESSIONAL ENGINEER
1/29/2016

FOR OFFICE USE ONLY

FOR OFFICE USE ONLY

TOLERANCES
DECIMAL DIMENSIONS:
3 PLACE .XXX ± .010
2 PLACE .XX ± .020
FRACTION DIMENSIONS: ± 1/16
ANGLE DIMENSIONS ± 2°
USE VTQ-007 & 008
UNLESS SPECIFIED OTHERWISE

DWN. BY:	CHK. BY:	APPV'D. BY:	APPV'D. BY:
J-W	CGW	CGW	
DATE: 10/10/14	DATE: 10/10/14	DATE: 10/10/14	DATE:

SHEET 16 OF 21

CHANGE LETTER	REVISION DESCRIPTION	DWN. BY:	CHK'D. BY:	APPV'D. BY:	APPV'D. BY:	DATE

RUSKIN
Air & Sound Control
3900 DR. GREAVES RD
GRANDVIEW, MO 64030

PLOT SCALE: B

ECN: -

TITLE
EME520MD
ASSEMBLY 'F'
ALT. CONNECTION DETAILS

DWG. NO.
60-022376-00B

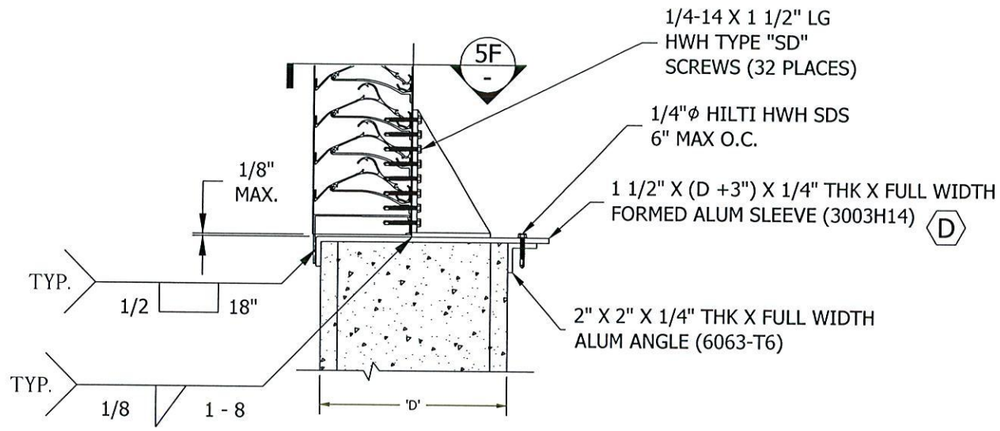

5E
-
ASSEMBLY 'F' ALTERNATE CONNECTION

N.T.S.
FLANGE FRAME W/ SLEEVE CONDITION

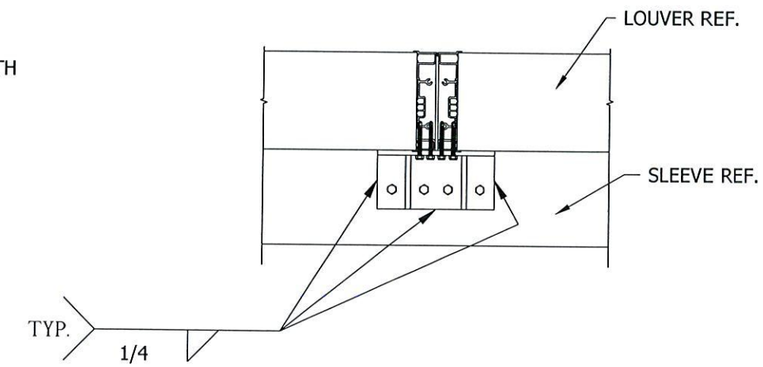

5F
-
ASSEMBLY 'F' ALTERNATE CONNECTION

N.T.S.
FLANGE FRAME W/ SLEEVE CONDITION

ENGINEER OF RECORD
CHELSEA GQ.WELCH
ENGINEERING DISCIPLINE
CIVIL ENGINEERING
REGISTRATION NUMBER
TX# 117359

STATE OF TEXAS
CHELSEA G. WELCH
117359
LICENSED
PROFESSIONAL ENGINEER
1/29/2016

FOR OFFICE USE ONLY

FOR OFFICE USE ONLY

TOLERANCES
DECIMAL DIMENSIONS:
3 PLACE .XXX +.010_
2 PLACE .XX +.020_
FRACTION DIMENSIONS: + 1/16
ANGLE DIMENSIONS + 2°_
USE WIQ-007 & 008
UNLESS SPECIFIED OTHERWISE

DWN. BY:	CHK. BY:	APPV'D. BY:	APPV'D. BY:
J-W	CGW	CGW	
DATE: 10/10/14	DATE: 10/10/14	DATE: 10/10/14	DATE:

SHEET 17 OF 21

CHANGE LETTER	REVISION DESCRIPTION	DWN. BY:	CHK'D. BY:	APPV'D. BY:	APPV'D. BY:	DATE

RUSKIN
Air & Sound Control
3900 DR. GREAVES RD
GRANDVIEW, MO 64030

PLOT SCALE
B

ECN: -

TITLE
EME520MD
ASSEMBLY 'F'
ALT. CONNECTION DETAILS

DWG. NO.
60-022376-00B

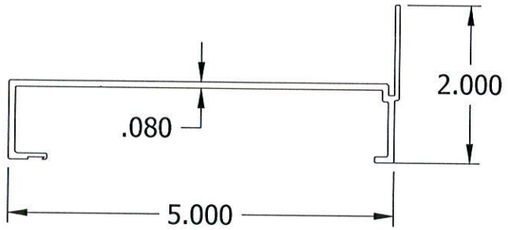

ITEM 1 - SILL FRAME

N.T.S.
RUSKIN #70-022498-00B
MATERIAL: 6063-T6 ALUM

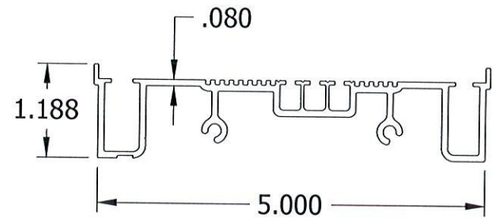

ITEM 2 - JAMB FRAME

N.T.S.
RUSKIN #70-022508-00B
MATERIAL: 6063-T6 ALUM

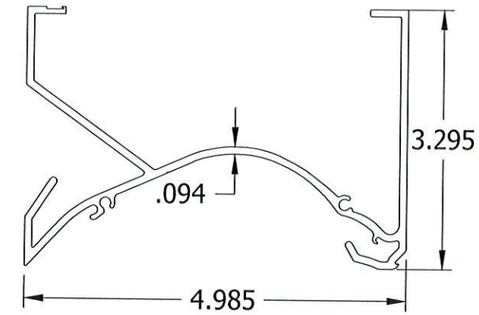

ITEM 3 - HEAD FRAME

N.T.S.
RUSKIN #70-022497-00B
MATERIAL: 6063-T6 ALUM

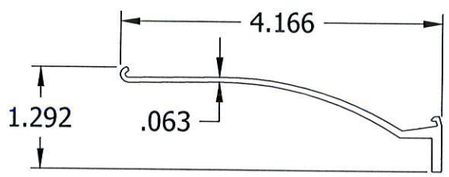

ITEM 4 - BLADE BRACE

N.T.S.
RUSKIN #70-022741-00B
MATERIAL: 6063-T6 ALUM

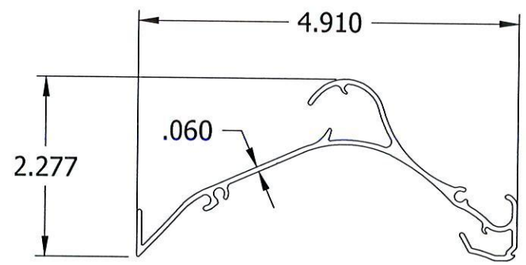

ITEM 5 - BLADE

N.T.S.
RUSKIN #70-022496-00B
MATERIAL: 6063-T6 ALUM

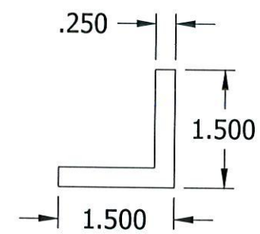

ITEM 6 - CLIP ANGLE

N.T.S.
RUSKIN #70-021175-00B
MATERIAL: 6063-T5
LENGTH: AS REQUIRED

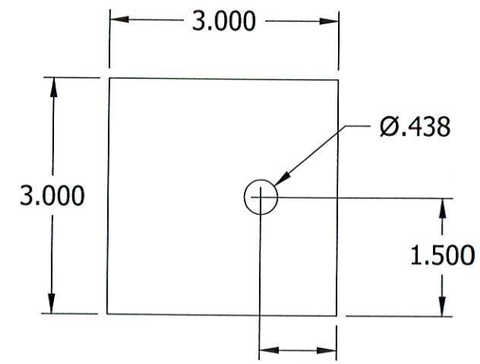

ITEM 7 - PLATE

N.T.S.
MATERIAL: 1/4" THK A36 STEEL

ENGINEER OF RECORD
CHELSEA GQ.WELCH

ENGINEERING DISCIPLINE
CIVIL ENGINEERING

REGISTRATION NUMBER
TX# 117359

STATE OF TEXAS
CHELSEA G. WELCH
117359
LICENSED
PROFESSIONAL ENGINEER

1/29/2016

FOR OFFICE USE ONLY

FOR OFFICE USE ONLY

TOLERANCES
DECIMAL DIMENSIONS:
3 PLACE .XXX +.010_
2 PLACE .XX +.020_
FRACTION DIMENSIONS: + 1/16
ANGLE DIMENSIONS + 2°_
USE WIQ-007 & 008
UNLESS SPECIFIED OTHERWISE

DWN. BY:	CHK. BY:	APPV'D. BY:	APPV'D. BY:
J-W	CGW	CGW	
DATE: 10/10/14	DATE: 10/10/14	DATE: 10/10/14	DATE:

SHEET 18 OF 21

CHANGE LETTER	REVISION DESCRIPTION	DWN. BY:	CHK'D. BY:	APPV'D. BY:	APPV'D. BY:	DATE

RUSKIN
Air & Sound Control
3900 DR. GREAVES RD
GRANDVIEW, MO 64030

PLOT SCALE: B

ECN: -

TITLE
EME520MD
PARTS DETAILS

DWG. NO.
60-022376-00B

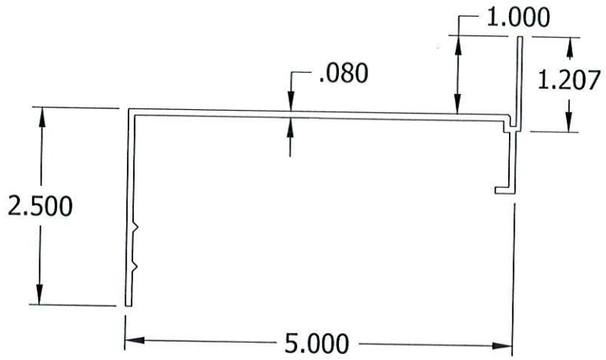

ITEM 13 - SILL FRAME FLANGED

N.T.S.
RUSKIN #70-020969-00B
MATERIAL: 6063-T5

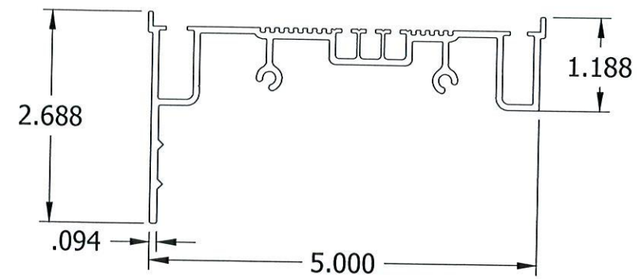

ITEM 14 - JAMB FRAME FLANGED

N.T.S.
RUSKIN #70-022509-00B
MATERIAL: 6063-T5

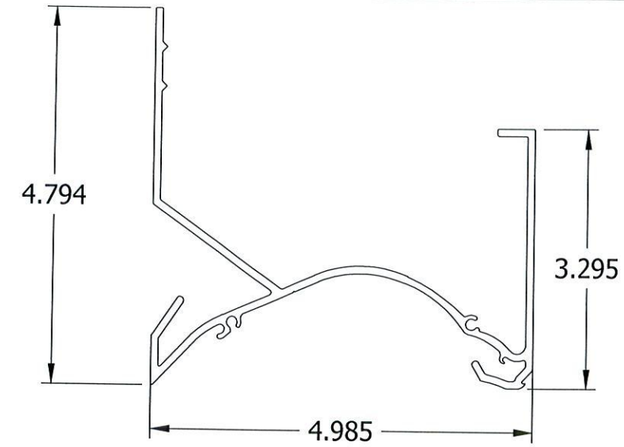

ITEM 15 - HEAD FRAME FLANGED

N.T.S.
RUSKIN #70-022499-00B
MATERIAL: 6063-T5

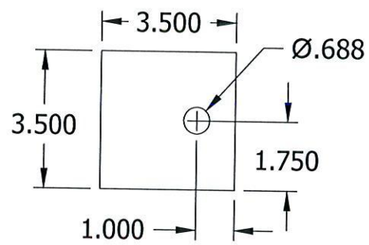

ITEM 16 - PLATE

N.T.S.
MATERIAL: 1/4" THK A36 STEEL

ITEM 17 - C6 X 8.2

N.T.S.
A36 STL HDG

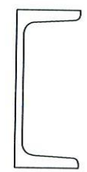

ITEM 18 - C5 X 6.7

N.T.S.
A36 STL HDG

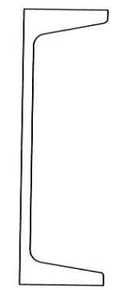

ITEM 19 - C7 X 9.8

N.T.S.
A36 STL HDG

ITEM 20 - C4 X 5.4

N.T.S.
A36 STL HDG

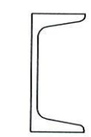

ITEM 21 - C3 x 4.1

N.T.S.
A36 STL HDG

ENGINEER OF RECORD
CHELSEA GQ.WELCH
ENGINEERING DISCIPLINE
CIVIL ENGINEERING
REGISTRATION NUMBER
TX# 117359

STATE OF TEXAS
CHELSEA G. WELCH
117359
LICENSED
PROFESSIONAL ENGINEER
1/29/2016

FOR OFFICE USE ONLY

FOR OFFICE USE ONLY

TOLERANCES
DECIMAL DIMENSIONS:
3 PLACE .XXX +.010_
2 PLACE .XX +.020_
FRACTION DIMENSIONS: + 1/16
ANGLE DIMENSIONS + 2°_
USE WIQ-007 & 008
UNLESS SPECIFIED OTHERWISE

DWN. BY:	CHK. BY:	APPV'D. BY:	APPV'D. BY:
J-W	CGW	CGW	
DATE: 10/10/14	DATE: 10/10/14	DATE: 10/10/14	DATE:

SHEET 20 OF 21

CHANGE LETTER	REVISION DESCRIPTION	DWN. BY:	CHK'D. BY:	APPV'D. BY:	APPV'D. BY:	DATE

RUSKIN
Air & Sound Control
3900 DR. GREAVES RD
GRANDVIEW, MO 64030

PLOT SCALE: B

ECN: -

TITLE
EME520MD
PARTS DETAILS

DWG. NO.
60-022376-00B

ASSEMBLY B & C SUPPORT TABLE

MULLION HEIGHT	MULLION SUPPORT	MULLION TO WOOD ATTACHMENT	MULLION TO STEEL ATTACHMENT	MULLION TO CONCRETE ATTACHMENT	MULLION TO CMU ATTACHMENT
FROM 133" TO 144"	(2) C6 X 8.2	DETAIL 4, 12	DETAIL 4A, 12A	DETAIL 4A, 12B	DETAIL 4A, 12C, 12D
FROM 116 TO 133"	(2) C5 X 6.7	DETAIL 4, 12	DETAIL 4A, 12A	DETAIL 4A, 12B	DETAIL 4A, 12C, 12D
FROM 103" TO 116"	(2) C4 X 5.4	DETAIL 4, 12	DETAIL 4A, 12A	DETAIL 4A, 12B	DETAIL 4A, 12C, 12D
FROM 47" TO 103"	(2) C3 X 4.1	DETAIL 4, 12	DETAIL 4A, 12A	DETAIL 4A, 12B	DETAIL 4A, 12C, 12D
FROM 12" TO 47"	NONE	DETAIL 5, 21	DETAIL 5A, 21	DETAIL 5B, 21	DETAIL 5C, 5D, 21

ASSEMBLY D SUPPORT TABLE

MULLION HEIGHT	MULLION SUPPORTS	MULLION TO WOOD ATTACHMENT	MULLION TO STEEL ATTACHMENT	MULLION TO CONCRETE ATTACHMENT	MULLION TO CMU ATTACHMENT
FROM 140" TO 144"	(2) C7 X 9.8	DETAIL 4, 12	DETAIL 4A, 12A	DETAIL 4A, 12B	DETAIL 4A, 12C, 12D
FROM 123" TO 140"	(2) C6 X 8.2	DETAIL 4, 12	DETAIL 4A, 12A	DETAIL 4A, 12B	DETAIL 4A, 12C, 12D
FROM 108" TO 123"	(2) C5 X 6.7	DETAIL 4, 12	DETAIL 4A, 12A	DETAIL 4A, 12B	DETAIL 4A, 12C, 12D
FROM 95" TO 108"	(2) C4 X 5.4	DETAIL 4, 12	DETAIL 4A, 12A	DETAIL 4A, 12B	DETAIL 4A, 12C, 12D
FROM 12" TO 95"	(2) C3 X 4.1	DETAIL 4, 12	DETAIL 4A, 12A	DETAIL 4A, 12B	DETAIL 4A, 12C, 12D

ENGINEER OF RECORD
CHELSEA GQ.WELCH
ENGINEERING DISCIPLINE
CIVIL ENGINEERING
REGISTRATION NUMBER
TX# 117359

STATE OF TEXAS
CHELSEA G. WELCH
117359
LICENSED
PROFESSIONAL ENGINEER
1/29/2016

FOR OFFICE USE ONLY

FOR OFFICE USE ONLY

TOLERANCES:
DECIMAL DIMENSIONS:
3 PLACE .XXX +.010
2 PLACE .XX +.020
FRACTION DIMENSIONS: + 1/16
ANGLE DIMENSIONS +- 2°
USE W/C-007 & 008
UNLESS SPECIFIED OTHERWISE

DWN. BY:	CHK. BY:	APPV'D. BY:	APPV'D. BY:
J-W	CGW	CGW	
DATE: 10/10/14	DATE: 10/10/14	DATE: 10/10/14	DATE:

SHEET 21 OF 21

CHANGE LETTER	REVISION DESCRIPTION	DWN. BY:	CHK'D. BY:	APPV'D. BY:	APPV'D. BY:	DATE

RUSKIN
Air & Sound Control
3900 DR. GREAVES RD
GRANDVIEW, MO 64030

PLOT SCALE
B

ECN: -

TITLE
EME520MD
ASSEMBLY B, C, & D
SUPPORT TABLES

DWG. NO.
60-022376-00B