REVISIONS				
CR	REV	DESCRIPTION	DATE	APPROVAL
X	--	RELEASE PER ER	10/25/13	GRT
	A	UPDATED MODELS	1/22/14	GRT
	B	UPDATED GLAZING	6/03/14	GRT

NOTES:

1. IMPACT RESISTANT GLAZING OPTION – IMPACT RESISTANT GLAZING SYSTEM MAY BE INSTALLED IN TOP OR INTERMEDIATE SECTION (WITH OR WITHOUT DECORATIVE INSERTS). GLAZING SHALL BE 1/4" POLYCARBONATE. MAXIMUM GLAZING DIMENSIONS SHALL BE 14" x 46" CUTOUT, FASTENED WITH A MINIMUM #8 X 1" SMS: 3X ALONG THE HORIZONTAL AND 3X ALONG THE VERTICAL. SEE DETAIL E ON SHEET 2 FOR ASSEMBLY DETAILS.

2. VINYL OR WOOD DOOR STOP NAILED A MAXIMUM OF 6" O.C. MUST OVERLAP TOP AND BOTH ENDS OF PANELS MINIMUM 7/16" TO MEET NEGATIVE PRESSURES.

3. KEY LOCK, SLIDE LOCK, OR OPERATOR REQUIRED.

4. LOUVER OPTION – .040" MINIMUM LOUVERS IN MOLDED FRAMES SCREWED TOGETHER WITH A MINIMUM OF (10) #8x1" SCREWS (3X ALONG THE HORIZONTAL AND 2X ALONG THE VERTICAL) INSTALLED IN THE BOTTOM SECTION. MAXIMUM LOUVER DIMENSIONS SHALL BE 15" x 19" CUTOUT. LOUVERS ARE NOT IMPACT RESISTANT AND DO NOT MEET THE REQUIREMENTS FOR WIND-BORNE DEBRIS REGIONS.

5. FACER STEEL TO HAVE A MINIMUM 27 GA THICKNESS AND BACKER STEEL TO HAVE A MINIMUM 29 GA THICKNESS.

6. A 4-1/2" x 6" x 22 GA BACKER PLATE IS TO BE LOCATED AT EVERY INTERMEDIATE AND OUTER END HINGE LOCATION.

7. THE DESIGN OF THE SUPPORTING STRUCTURAL ELEMENTS SHALL BE THE RESPONSIBILITY OF THE PROFESSIONAL OF RECORD FOR THE BUILDING OR STRUCTURE AND IN ACCORDANCE WITH CURRENT BUILDING CODES FOR THE LOADS LISTED ON THIS DRAWING.

8. DOOR JAMB TO BE MINIMUM 2x4 STRUCTURAL GRADE LUMBER. REFER TO JAMB CONNECTION SUPPLEMENT FOR ATTACHMENT TO SUPPORTING STRUCTURE.

9. FOR LOW HEAD ROOM LIFT CONDITIONS, TOP BRACKET SHALL BE A 13 GA LHR 7/4 TOP BRACKET WITHOUT PUSHNUTS AND WITH A MINIMUM OF (3) 1/4-14x7/8" SELF DRILLING CRIMPTITE SCREWS IN LIEU OF THE BRACKET SHOWN ON THIS DRAWING. U-BAR ON TOP SECTION SHALL BE INSTALLED ON TOP OF LHR TOP BRACKETS.

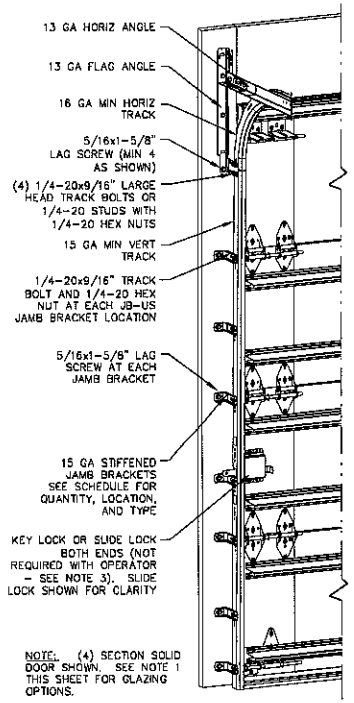

NOTE: (4) SECTION SOLID DOOR SHOWN. SEE NOTE 1 THIS SHEET FOR GLAZING OPTIONS.

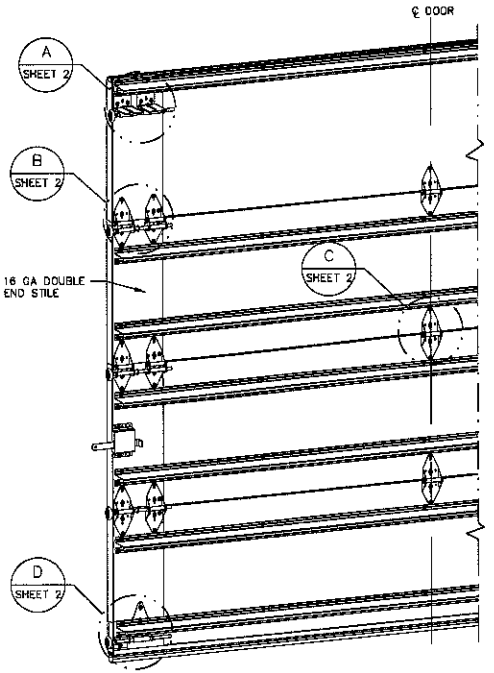

6/4/14

STATE OF TEXAS
MARK A SAWICKI
106291
LICENSED
PROFESSIONAL ENGINEER

STATIC PRESSURE RATINGS	APPROVED SIZES
DESIGN PRESSURE(PSF): +64.0/-72.0	MAX WIDTH: 9'-2"
	MAX HEIGHT: 24'
IMPACT/CYCLIC RATED: YES	MAX SECTION HEIGHT: 24"

SUPERIMPOSED DESIGN PRESSURE LOADS ON SUPPORTING STRUCTURE		
DOOR WIDTH	DOOR HEIGHT	UNIFORM LOAD EACH JAMB (PLF)
8'-2"	ALL	+261.3/-294.0
9'-2"	ALL	+293.3/-330.0

JAMB BRACKET SCHEDULE

DOOR HEIGHT	NO. OF SECTIONS	NO. OF JAMB BRACKETS (EACH JAMB)	LOCATION OF CENTERLINE OF JAMB BRACKETS MEASURED FROM BOTTOM OF TRACK (ALL DIMENSIONS ± 2")
6'-6"	4	7	2" (JB-US), 10" (JB-US), 21-3/4" (JB-US), 29-3/4" (JB-US), 39" (JB-US), 48" (JB-US), 57-1/4" (JB-US)
7'-0"	4	7	2" (JB-US), 10" (JB-US), 21-3/4" (JB-US), 29-3/4" (JB-US), 42" (JB-US), 52-1/2" (JB-US), 63-1/4" (JB-US)
7'-6"	4 OR 5	8	2" (JB-US), 10" (JB-US), 18-3/4" (JB-US), 26-3/4" (JB-US), 36" (JB-US), 45" (JB-US), 54-1/4" (JB-US), 74-1/2" (JB-US)
8'-0"	4 OR 5	8	2" (JB-US), 10" (JB-US), 21-3/4" (JB-US), 29-3/4" (JB-US), 39" (JB-US), 48" (JB-US), 57-1/2" (JB-US), 75-1/2" (JB-US)
> 8'-0"			SEE NOTE BELOW

NOTE:
(JB-US) FOLLOWING DIMENSION DENOTES SLOTTED JAMB BRACKET ATTACHED TO TRACK WITH 1/4-20x9/16" TRACK BOLT AND NUT AS SHOWN ABOVE.

ALL DOORS GREATER THAN 8' IN HEIGHT REQUIRE USE OF CONTINUOUS WALL ANGLE. SEE SUPPLEMENT TRACK CHART FOR DETAILS.

MARK A. SAWICKI, PE
2501 S. STATE HWY 121, SUITE 200
LEWISVILLE, TX 75067
FL PE 72613
TX PE 106291

PROFESSIONAL ENGINEER'S SEAL PROVIDED ONLY FOR VERIFICATION OF WIND LOAD CONSTRUCTION DETAILS.

THE DRAWINGS AND ALL OTHER INFORMATION CONTAINED HEREIN ARE THE CONFIDENTIAL AND PROPRIETARY PROPERTY OF OVERHEAD DOOR CORPORATION AND ITS AFFILIATED COMPANIES. THIS DRAWING AND INFORMATION, IN WHOLE OR IN PART, MAY NOT BE COPIED IN ANY MANNER OR DISCLOSED TO ANYONE WITHOUT THE PRIOR WRITTEN CONSENT OF OVERHEAD DOOR CORPORATION. NO DISCLOSURE OF ANY OF THIS DRAWING OR INFORMATION IS INTENDED TO OPERATE AS A LICENSE OR AUTHORIZATION TO USE IT FOR ANY PURPOSE WITHOUT THE SPECIFIC WRITTEN CONSENT OF OVERHEAD DOOR CORPORATION.

REF DWG	USED ON	THIRD ANGLE PROJECTION	TOLERANCES UNLESS OTHERWISE SPECIFIED: HOLE DIAMETER: UNDER .251 +.004/-.003; .251 TO .500 +.006/-.003; OVER .500 +.008/-.003; FRACTIONS ± 1/16; WHOLE NUMBERS ± .25; .X ± .1; .XX ± .03; .XXX ± .010; ANGLES ± .5°	FINISH N/A	The Genuine. The Original. LEWISVILLE, TEXAS	NAME / DATE: DRAWN BY G. TAYLOR 10/25/13	DRAWING TITLE: SERIES 5745/5765/7565 515/525	
		ASME Y14.100 AND Y14.5 APPLY UNLESS OTHERWISE SPECIFIED. DIMENSIONS ARE IN U.S. CUSTOMARY UNITS.	UNIT OF MEASURE EACH	MATERIAL: NONE	CHECKED BY: / APPROVED BY:	DRAWING NUMBER D- 411320	SCALE: N.T.S.	SHEET 1 OF 2

REVISIONS				
ER	REV	DESCRIPTION	DATE	APPROVAL
X	-	RELEASE PER ER	10/25/13	GRT
	A	UPDATED MODELS	1/22/14	GRT
	B	UPDATED GLAZING	6/03/14	GRT

(2) 12 GA COMMERCIAL 'L' FRAME TOP BRACKETS ATTACHED WITH (4) 1/4-20x7/8" SELF DRILLING SCREWS (2 THROUGH STRUT AND TOP BRACKET)

13 GA ROLLER SLIDE ATTACHED TO BRACKET WITH 5/16-18 BOLT & NUT IN THE CENTER SLOT

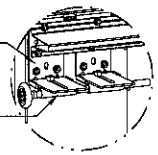

DETAIL A

ADD (2) 1/4-14x7/8" SELF DRILLING CRIMPTITE SCREWS (INSIDE OF EACH INSIDE END HINGE)

2" STEEL ROLLER WITH 9" GRADE 1144 OR EQUIVALENT STEM AND 7/16" PUSH NUT AT EACH ROLLER LOCATION LOCATED BETWEEN THE BRACKET OR HINGE (EXCEPT PUCHNUT LOCATED ON THE TOP AND BOTTOM ROLLER IS LOACTED OUTSIDE OF BOTH BRACKETS). 1/4" MAX BETWEEN PUSH NUT AND OUTER HINGE.

(2) 14 GA WIDE BODY END HINGES EACH ATTACHED WITH (4) 1/4-14x7/8" SELF DRILLING CRIMPTITE SCREWS

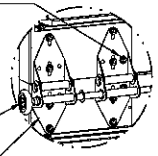

DETAIL B

NOTE: IF 3" TRACK IS USED, THEN END HINGES TO BE 11 GA MODIFIED HINGES. ROLLERS TO BE 3" STEEL ROLLERS WITH 9/16" DIA. X 9" LONG SHAFT AT ALL LOCATIONS EXCEPT TOP AND BOTTOM. TOP AND BOTTOM ROLLERS TO BE 3" STEEL ROLLERS WITH 7/16" DIA. X 9" LONG SHAFT. PUSH NUTS ONLY USED AT TOP AND BOTTOM ROLLER LOCATIONS.

14 GA WIDE BODY INTERMEDIATE HINGE ATTACHED WITH (4) 1/4-14x7/8" SELF DRILLING CRIMPTITE SCREWS

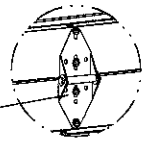

DETAIL C

12 GA EXTENSION BRACKET ATTACHED WITH (3) 1/4-14x7/8" SELF DRILLING CRIMPTITE SCREWS (2 THROUGH STRUT AND BRACKET)

14 GA BOTTOM BRACKET ATTACHED WITH (2) 1/4-14x7/8" SELF DRILLING CRIMPTITE SCREWS THROUGH STRUT AND BOTTOM BRACKET AND (1) 1/4-14x5/8" SELF DRILLING TAMPER RESISTANT SCREW

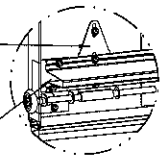

DETAIL D

HINGE & BACKER PLATE LOCATIONS

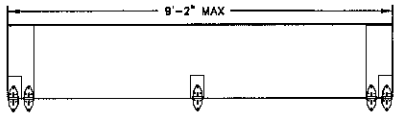

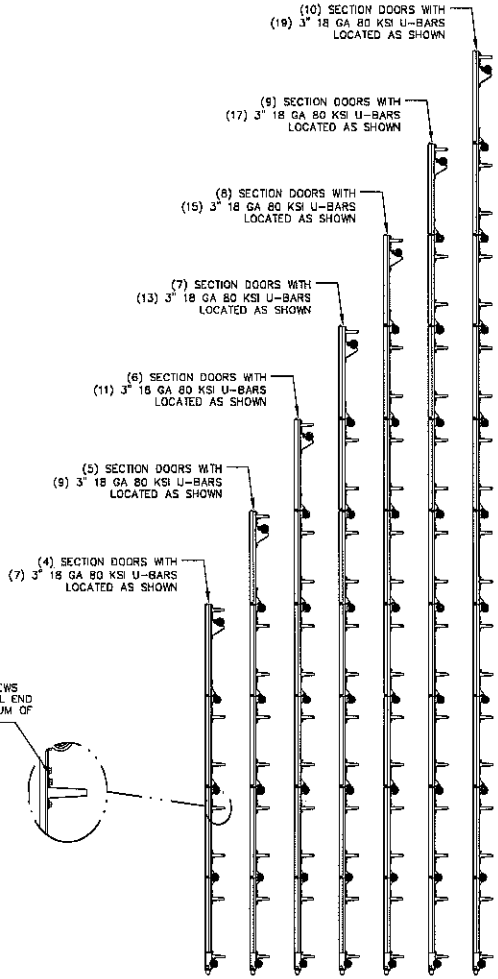

ALL U-BARS SHALL BE ATTACHED WITH (2) 1/4-14x7/8" SELF DRILLING CRIMPTITE SCREWS AT EACH HINGE LOCATION AND BETWEEN ALL END HINGES AND INTERMEDIATE HINGES. A MINIMUM OF (10) FASTENERS ARE TO BE USED.

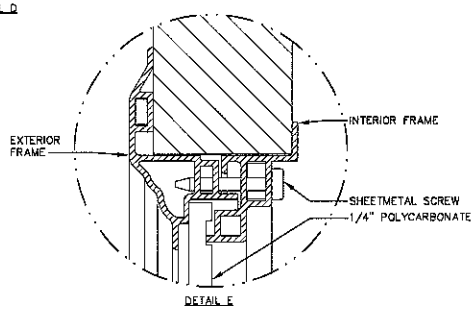

DETAIL E

6/4/14

STATE OF TEXAS
MARK A SAWICKI
106291
LICENSED
PROFESSIONAL ENGINEER

MARK A. SAWICKI, PE
2501 S. STATE HWY 121, SUITE 200
LEWISVILLE, TX 75067
FL PE 72613
TX PE 106291

PROFESSIONAL ENGINEER'S SEAL PROVIDED ONLY FOR VERIFICATION OF WIND LOAD CONSTRUCTION DETAILS.

THE DRAWINGS AND ALL OTHER INFORMATION CONTAINED HEREIN ARE THE CONFIDENTIAL AND PROPRIETARY PROPERTY OF OVERHEAD DOOR CORPORATION AND ITS AFFILIATED COMPANIES. THIS DRAWING AND INFORMATION, IN WHOLE OR IN PART, MAY NOT BE COPIED IN ANY MANNER OR DISCLOSED TO ANYONE WITHOUT THE PRIOR WRITTEN CONSENT OF OVERHEAD DOOR CORPORATION. NO DISCLOSURE OF ANY OF THIS DRAWING OR INFORMATION IS INTENDED TO OPERATE AS A LICENSE OR AUTHORIZATION TO USE IT FOR ANY PURPOSE WITHOUT THE SPECIFIC WRITTEN CONSENT OF OVERHEAD DOOR CORPORATION.

REF DWG	USED ON

THIRD ANGLE PROJECTION

ASME Y14.100 AND Y14.5 APPLY UNLESS OTHERWISE SPECIFIED DIMENSIONS ARE IN U.S. CUSTOMARY UNITS

TOLERANCES UNLESS OTHERWISE SPECIFIED

HOLE DIAMETER	WHOLE NUMBERS	
UNDER .251 +.004/-.003		± .25
.251 TO .500 +.006/-.003	.X	± .1
OVER .500 +.008/-.003	.XX	± .03
FRACTIONS	.XXX	± .010
± 1/16	ANGLES:	± .5°

FINISH: N/A

UNIT OF MEASURE: EACH

The Genuine. The Original. LEWISVILLE, TEXAS

MATERIAL: NONE

NAME	DATE
DRAWN BY: G. TAYLOR	10/25/13
CHECKED BY:	
APPROVED BY:	

DRAWING TITLE: SERIES 5745/5765/7565 515/525

DRAWING NUMBER: D- 411320

SCALE: N.T.S. SHEET 2 OF 2