REVISIONS				
CR	REV	DESCRIPTION	DATE	APPROVAL
X	-	RELEASE PER ER	10/25/13	GRT
	A	UPDATED MODELS	1/22/14	GRT
	B	UPDATED GLAZING	6/09/14	GRT

NOTES:

1. NON-IMPACT REISTANT GLAZING OPTION - .050" MINIMUM SSB GLAZING IN MOLDED FRAMES SCREWED TOGETHER WITH A MINIMUM OF (10) #8x1" SCREWS (3X ALONG THE HORIZONTAL AND 2X ALONG THE VERTICAL) INSTALLED IN TOP OR INTERMEDIATE SECTION (WITH OR WITHOUT DECORATIVE INSERTS) MEETS UNIFORM STATIC WIND PRESSURES SHOWN ON THIS DRAWING. MAXIMUM GLAZING DIMENSIONS SHALL BE 15" x 46" CUTOUT. GLAZING IS NOT IMPACT RESISTANT AND DOES NOT MEET THE REQUIREMENTS FOR WIND-BORNE DEBRIS REGIONS.

2. VINYL OR WOOD DOOR STOP NAILED A MAXIMUM OF 6" O.C. MUST OVERLAP TOP AND BOTH ENDS OF PANELS MINIMUM 7/16" TO MEET NEGATIVE PRESSURES.

3. KEY LOCK, SIDE LOCK, OR OPERATOR REQUIRED.

4. LOUVER OPTION - .040" MINIMUM LOUVERS IN MOLDED FRAMES SCREWED TOGETHER WITH A MINIMUM OF (10) #8x1" SCREWS (3X ALONG THE HORIZONTAL AND 2X ALONG THE VERTICAL) INSTALLED IN THE BOTTOM SECTION. MAXIMUM LOUVER DIMENSIONS SHALL BE 15" x 19" CUTOUT. LOUVERS ARE NOT IMPACT RESISTANT AND DO NOT MEET THE REQUIREMENTS FOR WIND-BORNE DEBRIS REGIONS.

5. FACER STEEL TO HAVE A MINIMUM 27 GA THICKNESS AND BACKER STEEL TO HAVE A MINIMUM 29 GA THICKNESS.

6. A 4-1/2" x 6" x 22 GA BACKER PLATE IS TO BE LOCATED AT EVERY INTERMEDIATE AND OUTER END HINGE LOCATION.

7. THE DESIGN OF THE SUPPORTING STRUCTURAL ELEMENTS SHALL BE THE RESPONSIBILITY OF THE PROFESSIONAL OF RECORD FOR THE BUILDING OR STRUCTURE AND IN ACCORDANCE WITH CURRENT BUILDING CODES FOR THE LOADS LISTED ON THIS DRAWING.

8. DOOR JAMB TO BE MINIMUM 2x4 STRUCTURAL GRADE LUMBER. REFER TO JAMB CONNECTION SUPPLEMENT FOR ATTACHMENT TO SUPPORTING STRUCTURE.

9. FOR LOW HEAD ROOM LIFT CONDITIONS, TOP BRACKET SHALL BE A 13 GA LHR 7/4 TOP BRACKET WITH A MINIMUM OF (3) 1/4-14x7/8" SELF DRILLING CRIMPTITE SCREWS IN LIEU OF THE BRACKET SHOWN ON THIS DRAWING. U-BAR ON TOP SECTION SHALL BE INSTALLED ON TOP OF LHR TOP BRACKETS.

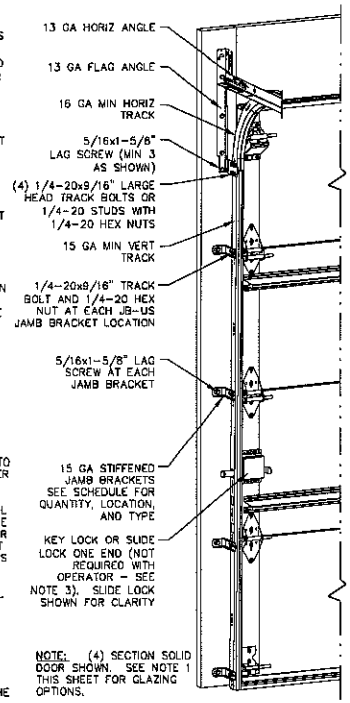

NOTE: (4) SECTION SOLID DOOR SHOWN. SEE NOTE 1 THIS SHEET FOR GLAZING OPTIONS.

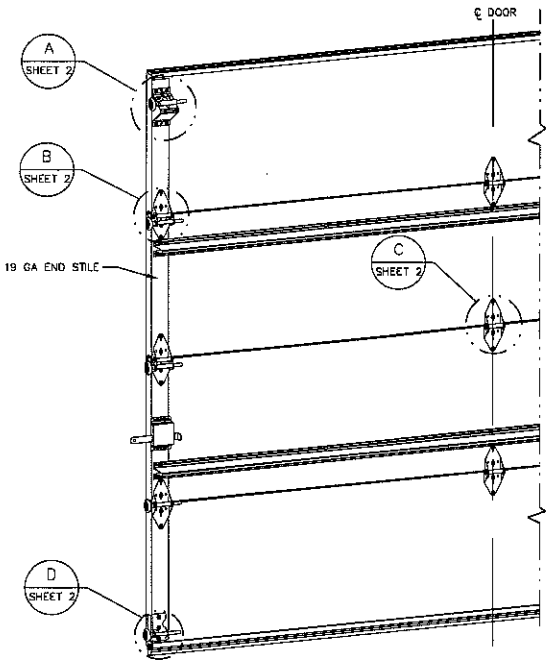

STATE OF TEXAS
MARK A SAWICKI
106291
LICENSED
PROFESSIONAL ENGINEER
6/4/14

STATIC PRESSURE RATINGS	APPROVED SIZES
DESIGN PRESSURE(PSF): +19.1/-20.6	MAX WIDTH: 9'-2"
	MAX HEIGHT: 24'
IMPACT/CYCLIC RATED: NO	MAX SECTION HEIGHT: 24'

SUPERIMPOSED DESIGN PRESSURE LOADS ON SUPPORTING STRUCTURE		
DOOR WIDTH	DOOR HEIGHT	UNIFORM LOAD EACH JAMB (PLF)
8'-2"	ALL	+78.0/-84.1
9'-2"	ALL	+87.5/-94.4

JAMB BRACKET SCHEDULE			
DOOR HEIGHT	NO. OF SECTIONS	NO. OF JAMB BRACKETS (EACH JAMB)	LOCATION OF CENTERLINE OF JAMB BRACKETS MEASURED FROM BOTTOM OF TRACK (ALL DIMENSIONS ± 2")
6'-6"	4	4	2" (JB-US), 21-3/4" (JB-US), 48" (JB-US), 57-1/4" (JB-US)
7'-0"	4	4	2" (JB-US), 21-3/4" (JB-US), 42" (JB-US), 63-1/4" (JB-US)
7'-6"	4 OR 5	4	2" (JB-US), 26-3/4" (JB-US), 45" (JB-US), 74-1/2" (JB-US)
8'-0"	4 OR 5	4	2" (JB-US), 21-3/4" (JB-US), 48" (JB-US), 75-1/2" (JB-US)
> 8'-0"			SEE NOTE BELOW

NOTE:
(JB-US) FOLLOWING DIMENSION DENOTES SLOTTED JAMB BRACKET ATTACHED TO TRACK WITH 1/4-20x9/16" TRACK BOLT AND NUT AS SHOWN ABOVE.

ALL DOORS GREATER THAN 8' IN HEIGHT REQUIRE USE OF CONTINUOUS WALL ANGLE. SEE SUPPLEMENT TRACK CHART FOR DETAILS.

MARK A. SAWICKI, PE
2501 S. STATE HWY 121, SUITE 200
LEWISVILLE, TX 75067
FL PE 72613
TX PE 106291

PROFESSIONAL ENGINEER'S SEAL PROVIDED ONLY FOR VERIFICATION OF WIND LOAD CONSTRUCTION DETAILS.

THE DRAWINGS AND ALL OTHER INFORMATION CONTAINED HEREIN ARE THE CONFIDENTIAL AND PROPRIETARY PROPERTY OF OVERHEAD DOOR CORPORATION AND ITS AFFILIATED COMPANIES. THIS DRAWING AND INFORMATION, IN WHOLE OR IN PART, MAY NOT BE COPIED IN ANY MANNER OR DISCLOSED TO ANYONE WITHOUT THE PRIOR WRITTEN CONSENT OF OVERHEAD DOOR CORPORATION. NO DISCLOSURE OF ANY OF THIS DRAWING OR INFORMATION IS INTENDED TO OPERATE AS A LICENSE OR AUTHORIZATION TO USE IT FOR ANY PURPOSE WITHOUT THE SPECIFIC WRITTEN CONSENT OF OVERHEAD DOOR CORPORATION.

REF DWG	USED ON

THIRD ANGLE PROJECTION

ASME Y14.5M AND Y14.5 APPLY UNLESS OTHERWISE SPECIFIED DIMENSIONS ARE IN U.S. CUSTOMARY UNITS

TOLERANCES UNLESS OTHERWISE SPECIFIED

HOLE DIAMETER	
UNDER .251	+.004/-.003
.251 TO .500	+.006/-.003
OVER .500	+.008/-.003
FRACTIONS	± 1/16

WHOLE NUMBERS	± .25
.X	± .1
.XX	± .02
.XXX	± .010
ANGLES	± .5°

FINISH: N/A

UNIT OF MEASURE: EACH

The Genuine. The Original. LEWISVILLE, TEXAS

MATERIAL: NONE

	NAME	DATE
DRAWN BY:	G. TAYLOR	10/25/13
CHECKED BY:		
APPROVED BY:		

DRAWING TITLE: SERIES 5745/5765/7565 515/525

DRAWING NUMBER: D- 411314

SCALE: N.T.S. SHEET 1 OF 2

REVISIONS				
ER	REV	DESCRIPTION	DATE	APPROVAL
X	-	RELEASE PER ER	10/25/13	GRT
	A	UPDATED MODELS	1/22/14	GRT
	B	UPDATED GLAZING	6/03/14	GRT

13 GA ROLLER SLIDE ATTACHED TO BRACKET WITH 5/16-18 BOLT & NUT IN CENTER SLOT AND 1/4-20x9/16" TRACK BOLT & 1/4-20 HEX NUT THROUGH ANY TWO ALIGNING HOLES

13 GA COMMERCIAL 'A' FRAME TOP BRACKET ATTACHED WITH (4) 1/4-14x7/8" SELF DRILLING CRIMPTITE SCREWS

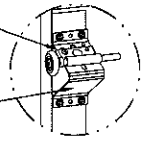

DETAIL A

2" STEEL ROLLER WITH 5-1/4" STEM

14 GA WIDE BODY END HINGE ATTACHED WITH (4) 1/4-14x7/8" SELF DRILLING CRIMPTITE SCREWS

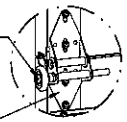

DETAIL B

14 GA WIDE BODY INTERMEDIATE HINGE ATTACHED WITH (4) 1/4-14x7/8" SELF DRILLING CRIMPTITE SCREWS

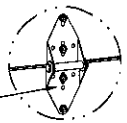

DETAIL C

14 GA BOTTOM BRACKET ATTACHED WITH (2) 1/4-14x7/8" SELF DRILLING CRIMPTITE SCREWS AND (1) 1/4-14x5/8" SELF DRILLING TAMPER RESISTANT SCREW

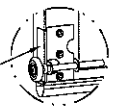

DETAIL D

HINGE & BACKER PLATE LOCATIONS

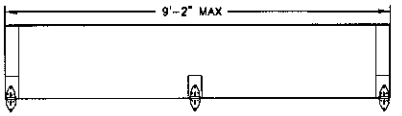

(10) SECTION DOORS WITH (6) 3" 20 GA 80 KSI U-BARS LOCATED AS SHOWN

(9) SECTION DOORS WITH (6) 3" 20 GA 80 KSI U-BARS LOCATED AS SHOWN

(8) SECTION DOORS WITH (5) 3" 20 GA 80 KSI U-BARS LOCATED AS SHOWN

(7) SECTION DOORS WITH (4) 3" 20 GA 80 KSI U-BARS LOCATED AS SHOWN

(6) SECTION DOORS WITH (4) 3" 20 GA 80 KSI U-BARS LOCATED AS SHOWN

(5) SECTION DOORS WITH (3) 3" 20 GA 80 KSI U-BARS LOCATED AS SHOWN

(4) SECTION DOORS WITH (2) 3" 20 GA 80 KSI U-BARS LOCATED AS SHOWN

ALL U-BARS SHALL BE ATTACHED WITH (2) 1/4-14x7/8" SELF DRILLING CRIMPTITE SCREWS AT EACH HINGE LOCATION AND BETWEEN ALL END HINGES AND INTERMEDIATE HINGES. A MINIMUM OF (10) FASTENERS ARE TO BE USED.

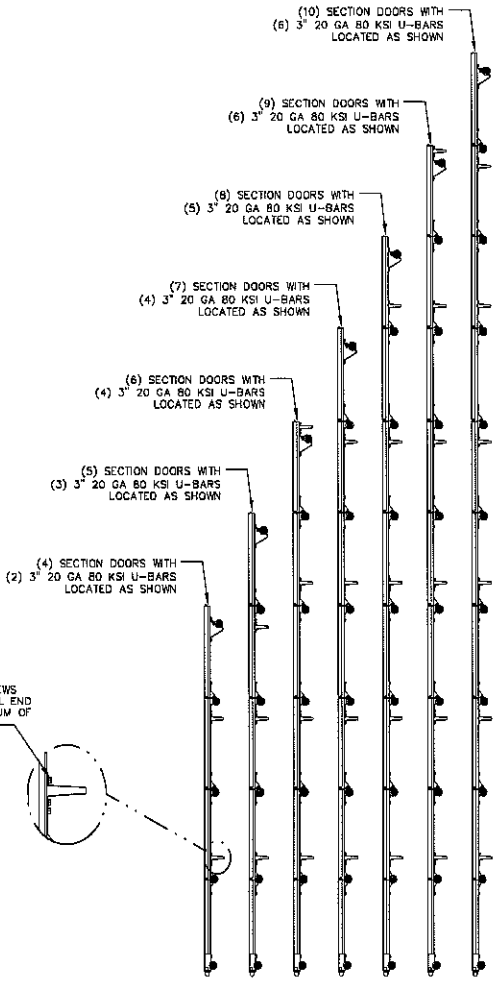

6/4/14

STATE OF TEXAS
MARK A SAWICKI
106291
LICENSED
PROFESSIONAL ENGINEER

MARK A. SAWICKI, PE
2501 S. STATE HWY 121, SUITE 200
LEWISVILLE, TX 75067
FL PE 72613
TX PE 106291

PROFESSIONAL ENGINEER'S SEAL PROVIDED ONLY FOR VERIFICATION OF WIND LOAD CONSTRUCTION DETAILS.

THE DRAWINGS AND ALL OTHER INFORMATION CONTAINED HEREIN ARE THE CONFIDENTIAL AND PROPRIETARY PROPERTY OF OVERHEAD DOOR CORPORATION AND ITS AFFILIATED COMPANIES. THIS DRAWING AND INFORMATION, IN WHOLE OR IN PART, MAY NOT BE COPIED IN ANY MANNER OR DISCLOSED TO ANYONE WITHOUT THE PRIOR WRITTEN CONSENT OF OVERHEAD DOOR CORPORATION. NO DISCLOSURE OF ANY OF THIS DRAWING OR INFORMATION IS INTENDED TO OPERATE AS A LICENSE OR AUTHORIZATION TO USE IT FOR ANY PURPOSE WITHOUT THE SPECIFIC WRITTEN CONSENT OF OVERHEAD DOOR CORPORATION.

REF DWG	USED ON

THIRD ANGLE PROJECTION

ASME Y14.5M AND Y14.5 APPLY, UNLESS OTHERWISE SPECIFIED DIMENSIONS ARE IN U.S. CUSTOMARY UNITS

TOLERANCES UNLESS OTHERWISE SPECIFIED

HOLE DIAMETER	
UNDER .251	+.004/-.003
.251 TO .500	+.006/-.003
OVER .500	+.008/-.003
FRACTIONS	
	± 1/16

WHOLE NUMBERS	± .25
.X	± .1
.XX	± .03
.XXX	± .010
ANGLES	± .5°

FINISH: N/A

UNIT OF MEASURE: EACH

MATERIAL: NONE

LEWISVILLE, TEXAS

NAME	DATE
DRAWN BY: G. TAYLOR	10/25/13
CHECKED BY:	
APPROVED BY:	

DRAWING TITLE: SERIES 5745/5765/7565 515/525

DRAWING NUMBER: D- 411314

SCALE: N.T.S. SHEET 2 OF 2