NOTES

1. (−W/L) = NEGATIVE WINDLOAD
   (+W/L) = POSITIVE WINDLOAD
2. WALL ANGLES MAY BE WELDED TO STEEL JAMB. USE MIN 60XX ELECTRODE SEE SHEET 2 FOR WELD DETAIL
3. RATED DESIGN LOAD ±65 PSF.
4. CURTAIN MATERIAL: ASTM A−653 (30KSI MIN YIELD) OR SS 304 (42KSI MIN YIELD). GUIDE MATERIAL: ASTM A−36
5. CURTAIN MATERIAL SHALL BE GALVANIZED ACCORDING TO ASTM A−653 TO G40 (MINIMUM).
6. THE DOOR MUST BE INSTALLED WITH THE TENSION WHEEL FACING THE INSIDE OF THE BUILDING.
7. SLIDE BOLTS MUST BE ENGAGED AND CHAIN MUST BE HOOKED WHEN HURRICANE WINDS ARE ANNOUNCED
8. WINDLOCK MATERIAL: LOW CARBON CAST STEEL, GRADE 70−46 (485−250) PER ASTM A27. MIN TENSILE 70−KSI MIN YIELD 36−KSI. MIN ELONG 22%
9. WINDLOCKS ATTACHED TO EACH SLAT (CONTINUOUS)
10. RIVET SPECIFICATIONS: 1/4" DIAMETER RIVET, MINIMUM 1006 LOW−CARBON STEEL.
11. OPERATING (ROLL−UP) MECHANISM IS NOT INCLUDED IN THIS APPROVAL. IT MUST BE CERTIFIED BY AN INDEPENDANT TESTING AGENCY, IF REQUIRED.

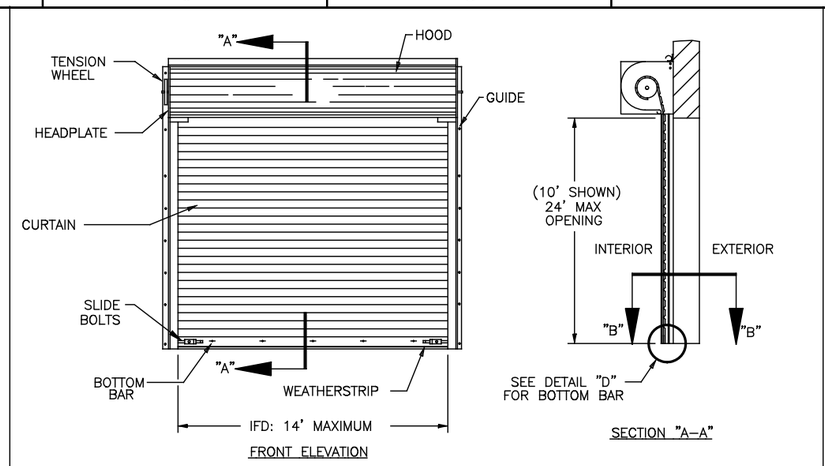

FRONT ELEVATION

SECTION "A−A"

REVISIONS

ER	REV	DESCRIPTION	DATE	APPROVAL
501635	D	REV PER ER	7/10/12	MS
502235	E	REV PER ER	7/18/13	MS
502222	F	REV PER ER	9/20/13	MS

HOT ROLLED ANGLES

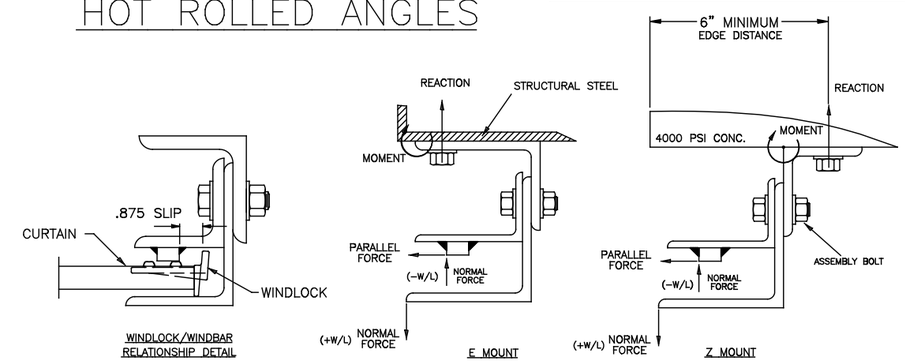

WINDLOCK/WINDBAR RELATIONSHIP DETAIL

E MOUNT

Z MOUNT

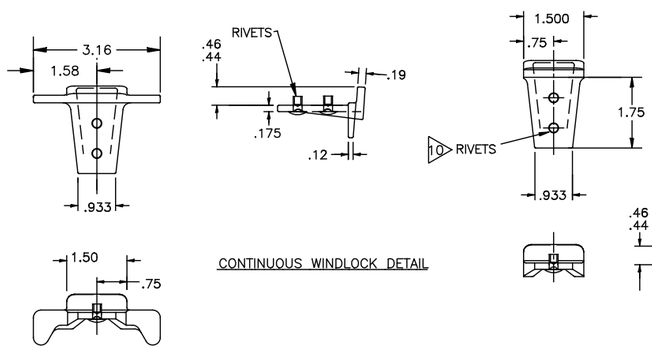

CONTINUOUS WINDLOCK DETAIL

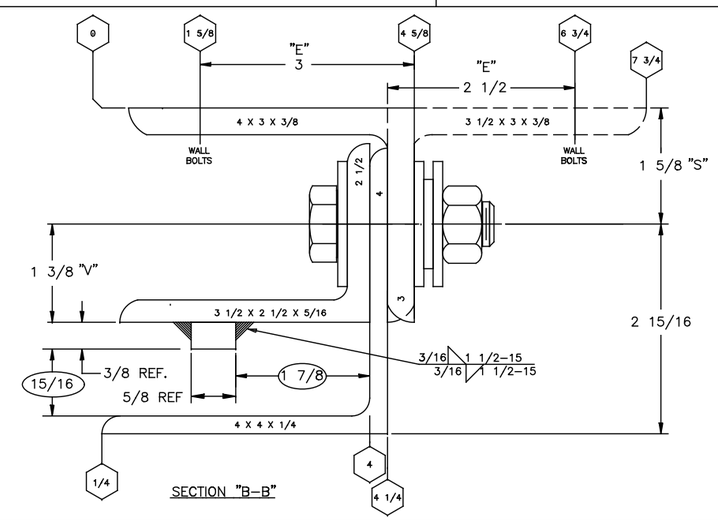

SECTION "B−B"

JAMB LOAD SUMMARY TABLE

LBS/FT DOOR HEIGHT	(E−MOUNT) LOADS	(Z−MOUNT) LOADS
REACTION	3442	5012
NORMAL	455	455
PARALLEL	1003	1003

FASTENER SUMMARY TABLE

	ASSEMBLY BOLT	WALL BOLT STEEL JAMB	WALL BOLT * CONCRETE JAMB
F−265	5/8" GRADE 5, 18" O.C.	1/2" GRADE 5, 12" O.C.	5/8", 4 " EMB POWERS WEDGE BOLT, OR 5/8" 4" EMB HILTI KWIK BOLT 3 8" O.C.

* 4000 PSI MINIMUM AND 6" EDGE DISTANCE FOR ANCHORS

2 NOTE: FOR DETAILS ON WELDING GUIDES TO STEEL JAMBS SEE SHEET 2.

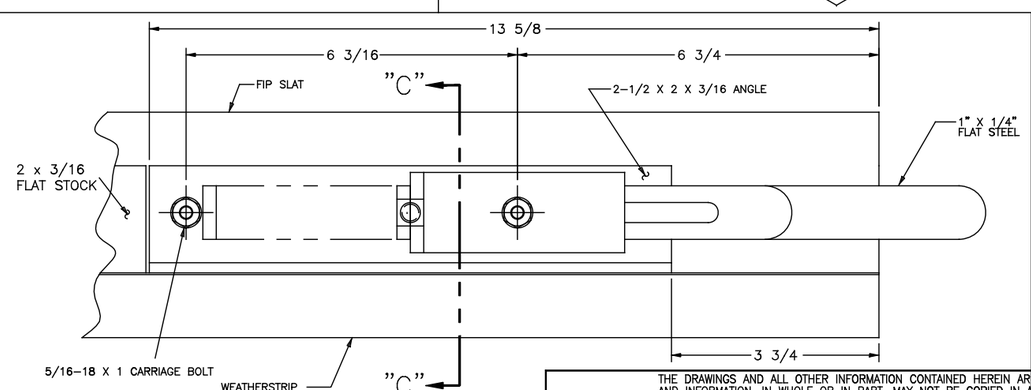

DETAIL "D"
BOTTOM BAR

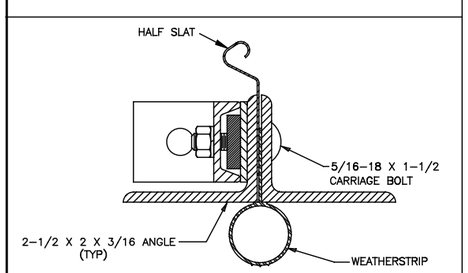

SECTION "C−C"

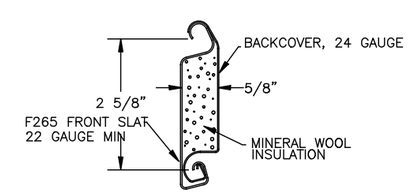

FIP SLAT

FRONT SLAT GAUGE OPTIONS: 22**, 20, 18

** TESTED IN ACCORDANCE WITH DADE COUNTY PROTOCOLS TAS 201−94, TAS 202−94, AND TAS 203−94

OVERHEAD DOOR CORPORATION
2501 SOUTH STATE HWY 121 BUSINESS
LEWISVILLE, TX 75067
LeROY G. KRUPKE, P.E. #36580

THE DRAWINGS AND ALL OTHER INFORMATION CONTAINED HEREIN ARE THE CONFIDENTIAL AND PROPRIETARY PROPERTY OF OVERHEAD DOOR CORPORATION AND ITS AFFILIATED COMPANIES. THIS DRAWING AND INFORMATION, IN WHOLE OR IN PART, MAY NOT BE COPIED IN ANY MANNER OR DISCLOSED TO ANYONE WITHOUT THE PRIOR WRITTEN CONSENT OF OVERHEAD DOOR CORPORATION. NO DISCLOSURE OF ANY OF THIS DRAWING OR INFORMATION IS INTENDED TO OPERATE AS A LICENSE OR AUTHORIZATION TO USE IT FOR ANY PURPOSE WITHOUT THE SPECIFIC WRITTEN CONSENT OF OVERHEAD DOOR CORPORATION.

REF DWG	USED ON

THIRD ANGLE PROJECTION

ASME Y14.100 AND Y14.5 APPLY, UNLESS OTHERWISE SPECIFIED DIMENSIONS ARE IN U.S. CUSTOMARY UNITS.

TOLERANCES UNLESS OTHERWISE SPECIFIED

HOLE DIAMETER	WHOLE NUMBERS:	± .25
UNDER .251 +.004/−.003	.X	± .1
.251 TO .500 +.006/−.003	.XX	± .03
OVER .500 +.008/−.003	.XXX	± .010
FRACTIONS	ANGLES:	± .5°
± 1/16		

FINISH 5

UNIT OF MEASURE N/A

The Genuine. The Original. OVERHEAD DOOR — LEWISVILLE, TEXAS

MATERIAL: 4

	NAME	DATE
DRAWN BY:	D WARNER	2/26/09
CHECKED BY:	M SAWICKI	8/24/09
APPROVED BY:	S FOENG	9/23/09

DRAWING TITLE: SERIES 635, ROLLING FIRE DOOR 14' MIAMI−DADE COUNTY

DRAWING NUMBER D− 308232

SCALE: NONE — SHEET 1 OF 2

NOTES

1. REFER TO DRAWING 308672–0001 FOR TAG DETAILS.
2. FASTENER FOR TAG IS P/N 080276–1004(STEEL DRIVE SCREW). TAG WILL BE MOUNTED IN THE MIDDLE OF THE BOTTOM BAR.

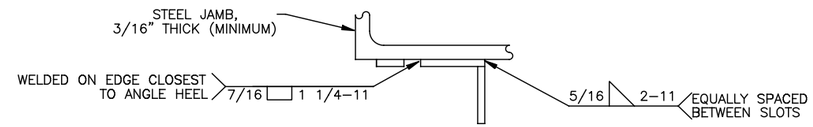

TOP VIEW

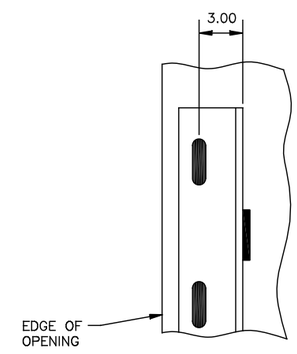

FRONT VIEW
OF WALL ANGLE

DETAILS FOR WELDING "E" GUIDES TO STEEL JAMBS

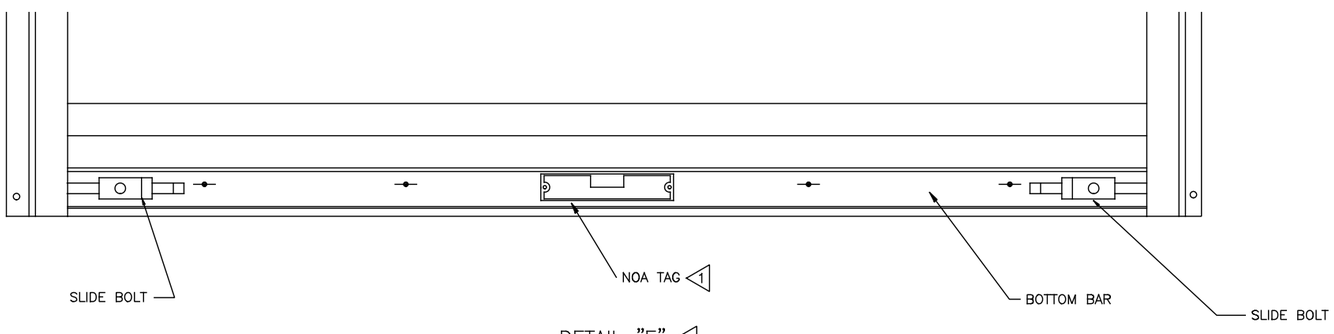

DETAIL "E" 2

SCALE: 4/1

OVERHEAD DOOR CORPORATION
2501 SOUTH STATE HWY 121 BUSINESS
LEWISVILLE, TX 75067
LeROY G. KRUPKE, P.E. #36580

THE DRAWINGS AND ALL OTHER INFORMATION CONTAINED HEREIN ARE THE CONFIDENTIAL AND PROPRIETARY PROPERTY OF OVERHEAD DOOR CORPORATION AND ITS AFFILIATED COMPANIES. THIS DRAWING AND INFORMATION, IN WHOLE OR IN PART, MAY NOT BE COPIED IN ANY MANNER OR DISCLOSED TO ANYONE WITHOUT THE PRIOR WRITTEN CONSENT OF OVERHEAD DOOR CORPORATION. NO DISCLOSURE OF ANY OF THIS DRAWING OR INFORMATION IS INTENDED TO OPERATE AS A LICENSE OR AUTHORIZATION TO USE IT FOR ANY PURPOSE WITHOUT THE SPECIFIC WRITTEN CONSENT OF OVERHEAD DOOR CORPORATION.

REF DWG	USED ON

THIRD ANGLE PROJECTION

ASME Y14.100 AND Y14.5 APPLY, UNLESS OTHERWISE SPECIFIED DIMENSIONS ARE IN U.S. CUSTOMARY UNITS.

TOLERANCES UNLESS OTHERWISE SPECIFIED

HOLE DIAMETER	WHOLE NUMBERS:	± .25
UNDER .251 +.004/–.003	.X	± .1
.251 TO .500 +.006/–.003	.XX	± .03
OVER .500 +.008/–.003	.XXX	± .010
FRACTIONS	ANGLES:	± .5°
± 1/16		

FINISH 5

UNIT OF MEASURE N/A

The Genuine. The Original. OVERHEAD DOOR

LEWISVILLE, TEXAS

MATERIAL: 4

	NAME	DATE
DRAWN BY:	D WARNER	2/26/09
CHECKED BY:	M SAWICKI	8/24/09
APPROVED BY:	S FOENG	9/23/09

DRAWING TITLE: SERIES 635, ROLLING FIRE DOOR 14' MIAMI–DADE COUNTY

DRAWING NUMBER D– 308232

SCALE: NONE SHEET 2 OF 2