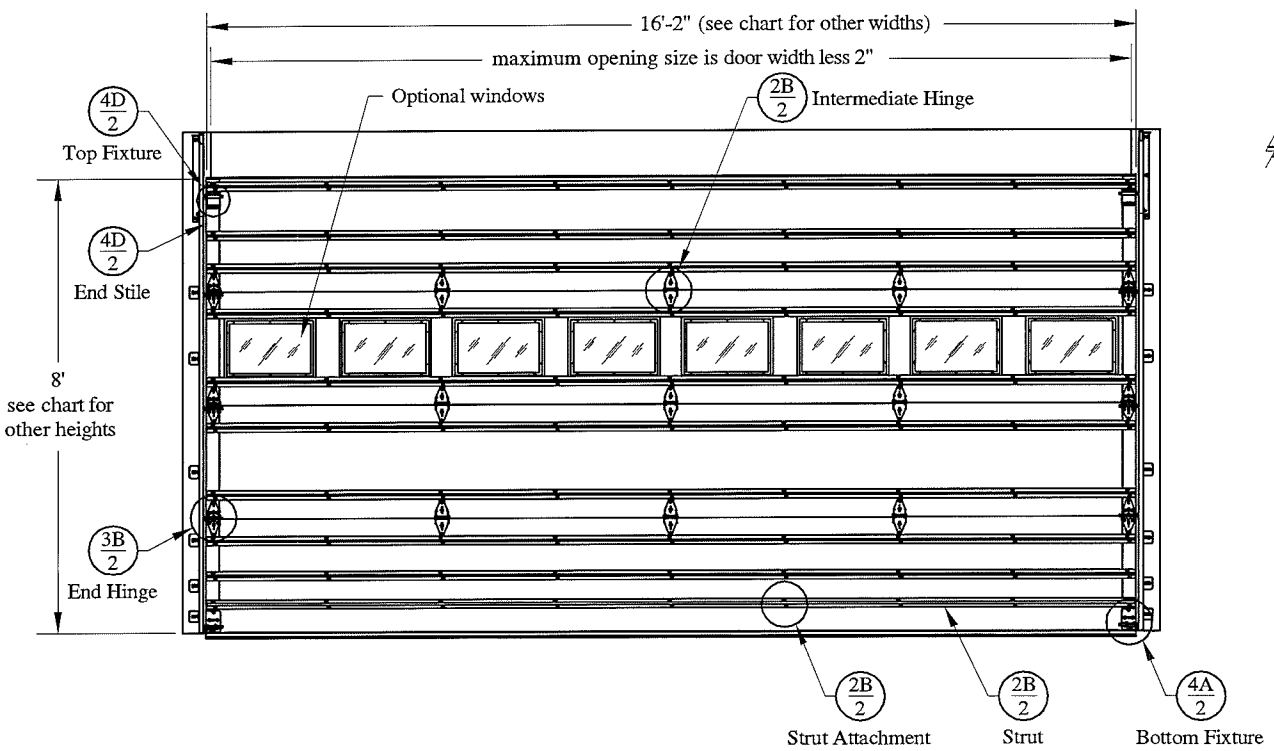

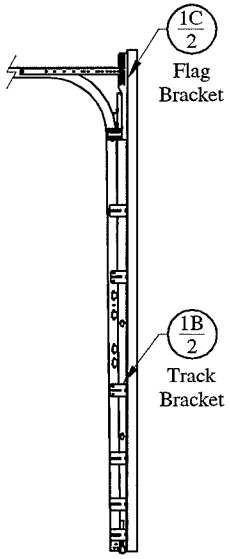

Window Options:
1/4" Lexan with Aluminum Frame
max daylight opening 16-3/4" x 9-1/2"

Door Height	Section Quantity	Strut Quantity	Trk Brkt Per Side
6'-0" to 8'-0"	4	10	6
8'-3" to 10'-0"	5	13	8
10'-3" to 12'-0"	6	15	10
12'-3" to 14'-0"	7	18	12
14'-3" to 16'-0"	8	20	14
16'-3" to 18'-0"	9	23	16
18'-3" to 20'-0"	10	25	18
20'-3" to 22'-0"	11	28	20
22'-3" to 24'-0"	12	30	22

Track bracket quantities shown are for use with grade 2 or better southern pine jambs. When using softer wood species like spruce-pine-fir (SPF) use the quantity of track brackets specified in the chart plus four track brackets per side.

This door has been evaluated per ASCE 7-02 & 7-05 as referenced by 2006 IBC 1609 & 2006 IRC 301, in accordance with ASTM E330-02 & ANSI/DASMA 108-02, 108-05 and for windborne debris in accordance with ASTM E1886-05/E1996-09 & ANSI/DASMA 115-05 (9 pound missile) Design Pressures (DP) typically meet requirements for the following exposure B wind speeds. These wind speeds are for 8' high doors on buildings with mean roof height less than 30 feet.

Door	With windows		No windows		Backer
Width	Design Pressure	Exp B	Design Pressure	Exp B	plates
16'-06"	38.2 / - 41.7 (psf)	165 (mph)	38.2 / - 41.7 (psf)	165 (mph)	7
16'-02"	39.8 / - 43.4 (psf)	168 (mph)	39.8 / - 43.4 (psf)	168 (mph)	7
15'-02"	39.8 / - 43.4 (psf)	167 (mph)	42.4 / - 46.3 (psf)	173 (mph)	7
14'-02"	39.8 / - 43.4 (psf)	167 (mph)	43.0 / - 48.3 (psf)	175 (mph)	5
13'-02"	39.8 / - 43.4 (psf)	167 (mph)	43.0 / - 48.3 (psf)	175 (mph)	5
12'-02"	39.8 / - 43.4 (psf)	166 (mph)	43.0 / - 48.3 (psf)	174 (mph)	5

Backer plate quantity is minimum per section.

Supporting structural elements to be designed by registered professional engineer for specified wind loads. If door is not electrically operated, a lock must be installed.
Door height: 24'-0" max
Section height: 24" max

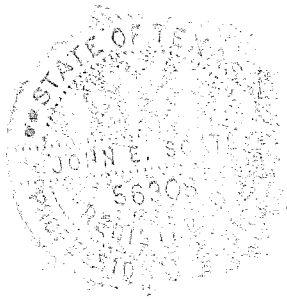

Professional Engineer's seal provided only for verification of windload construction details

2/27/13

John E. Scates, P.E.
3121 Fairgate Drive
Carrollton, Texas 75007
TXPE 56308, F-2203

C.H.I. OVERHEAD DOORS

SCALE nts
DATE 2-25-2013

Models: 3212, 3216, 3285

43.0 (psf) / - 48.3 (psf) at 12'-02" through
38.2 (psf) / - 41.7 (psf) at 16'-06"

C.H.I. Drawing: TZ9i-16-63513

Strut (if applicable) not shown for clarity.

Details on some views may have been omitted for clarity.

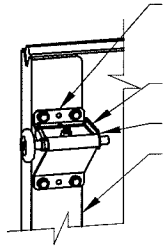

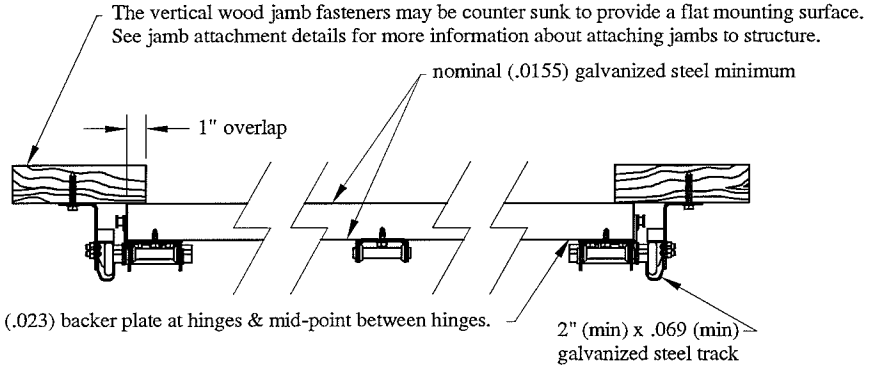

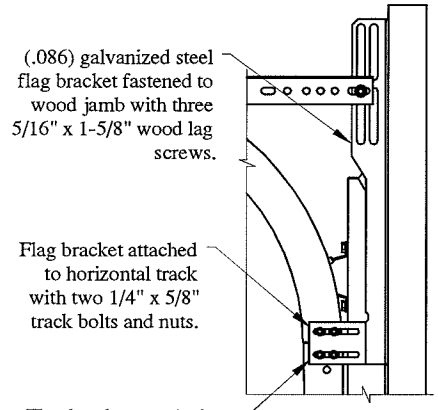

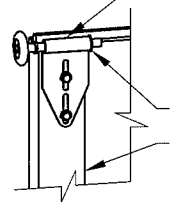

Optional low head room top bracket

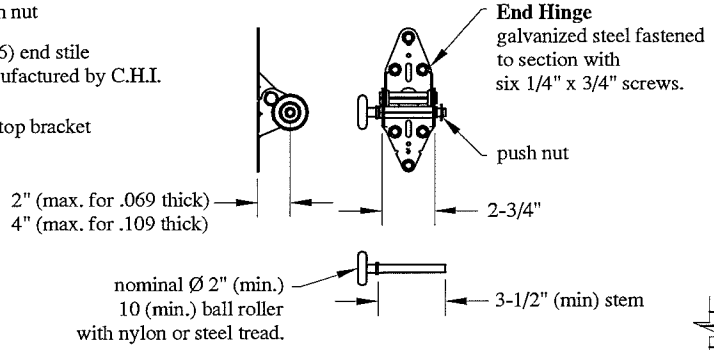

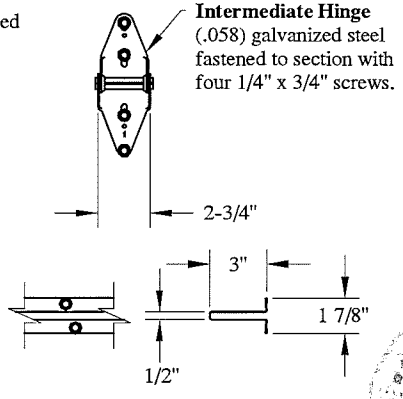

(.051) 50 ksi galvanized steel 3" strut attached with two 1/4" x 3/4" screws per stile or hinge plate.

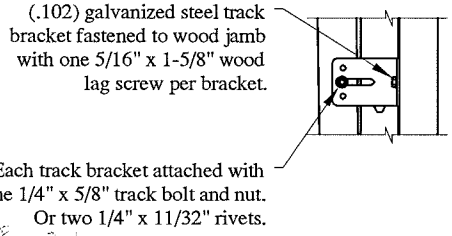

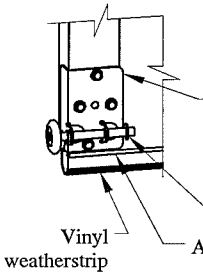

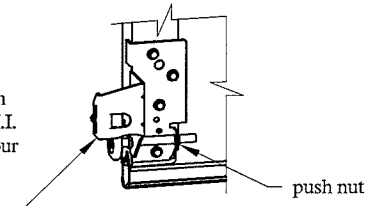

Optional low head room bottom bracket

Professional Engineer's seal provided only for verification of windload construction details

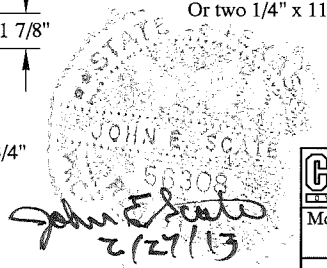

John E. Scates, P.E.
3121 Fairgate Drive
Carrollton, Texas 75007
TXPE 56308, F-2203

C.H.I. OVERHEAD DOORS

SCALE	nts
DATE	2-25-2013
Models:	3212, 3216, 3285
43.0 (psf) / - 48.3 (psf) at 12'-02" through 38.2 (psf) / - 41.7 (psf) at 16'-06"	
C.H.I. Drawing:	TZ9i-16-63513 page_2_of_2