Window Option: No Window options are available.

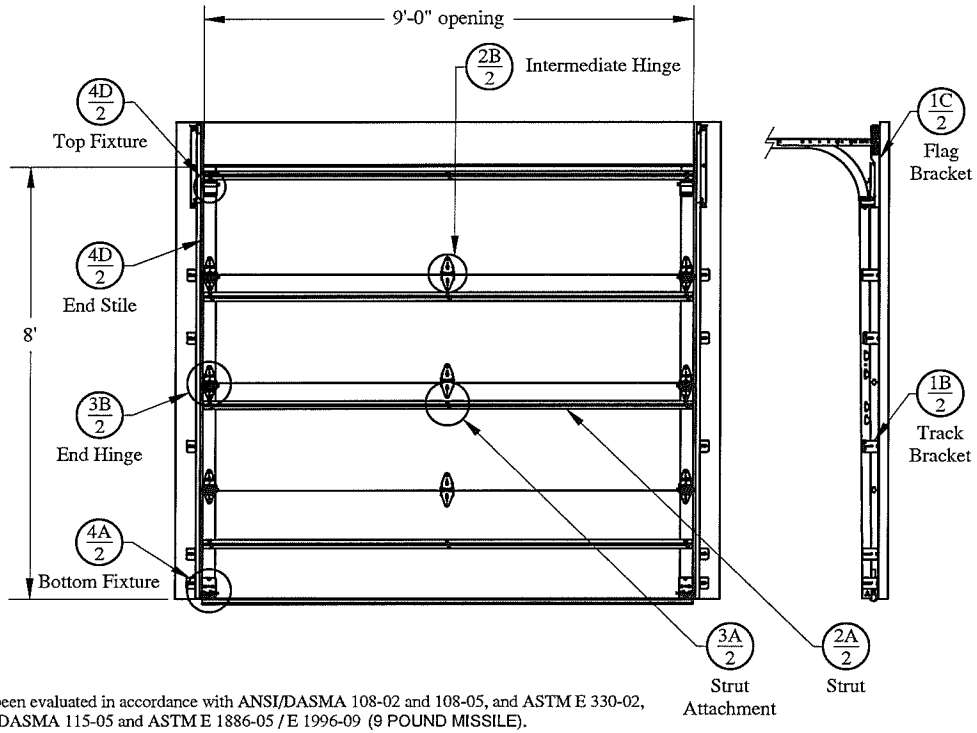

door height	section quantity	strut quantity	trk brkt per side
6'-0" to 8'-0"	4	4	5
8'-3" to 10'-0"	5	5	6
10'-3" to 12'-0"	6	6	7
12'-3" to 14'-0"	7	7	8
14'-3" to 16'-0"	8	8	9
16'-3" to 18'-0"	9	9	10
18'-3" to 20'-0"	10	10	11

Track bracket quantities shown are for use with grade 2 or better spruce-pine-fir (SPF) or southern pine jambs.

Supplemental Instructions contain details for doors up to 20'-0" high. These are required in addition to this drawing for installation. Always use supplemental instructions in addition to this drawing during door installation.

This door has been evaluated in accordance with ANSI/DASMA 108-02 and 108-05, and ASTM E 330-02, and ANSI/DASMA 115-05 and ASTM E 1886-05 / E 1996-09 (9 POUND MISSILE).

Per ASCE 7-02 & 7-05 as referenced by 2006 IBC 1609 and 2006 IRC 301,

Design Pressures (DP) typically meet or exceed the requirements for the following wind speeds.

These wind speeds are for 7' high doors, taller openings typically withstand higher wind speeds.

V = 177 MPH for Exposure B and mean roof height of 30' or less

V = 150 MPH for Exposure C and mean roof height of 30' or less

Maximum section height: 24"

Door has been tested for windborne debris.

Wood buck and supporting structural elements shall be designed by a registered professional engineer for wind loads shown on this drawing.

If door is not electrically operated, a lock must be installed.

Professional Engineer's seal provided only for verification of windload construction details

7/16/12

John E. Scates, P.E.
3121 Fairgate Drive
Carrollton, Texas 75007
TXPE 56308, F-2203

C.H.I. OVERHEAD DOORS

SCALE nts

DATE 05-19-2012

Model 53XX/54XX/55XX/56XX/57XX/58XX

Width: 9'-0"

Design Pressure (DP): 49.9 pos / 56.7 neg

C.H.I. Drawing: TZ9i-09-04503

Strut (if applicable) not shown for clarity.

Details on some views may have been omitted for clarity.

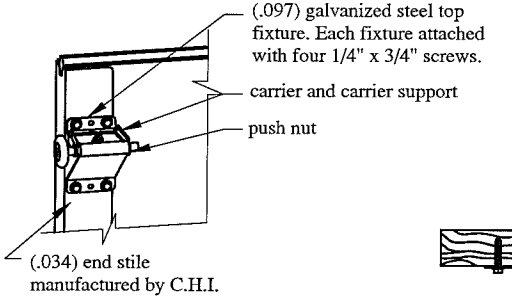

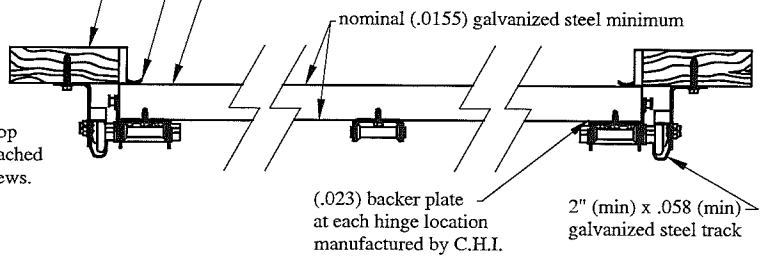

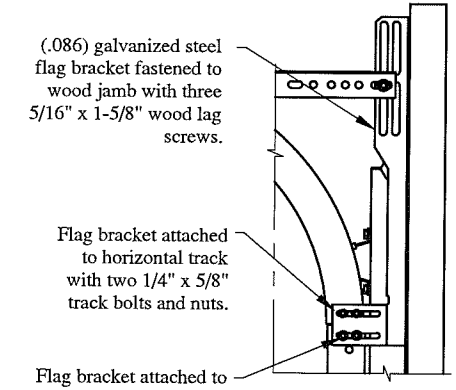

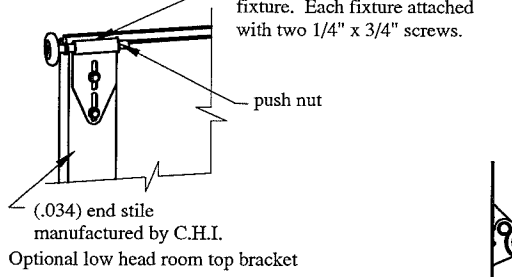

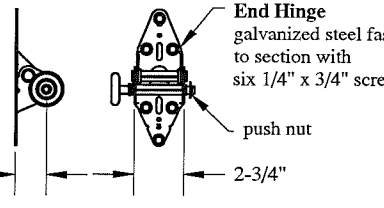

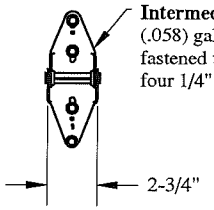

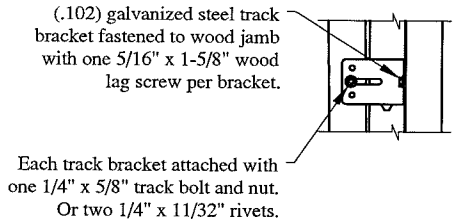

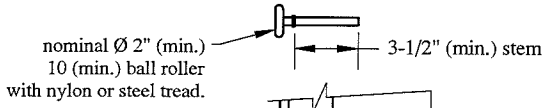

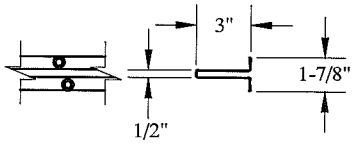

(.051) 50 ksi galvanized steel 3" strut attached with two 1/4" x 3/4" screws per stile or hinge plate.

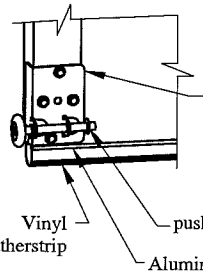

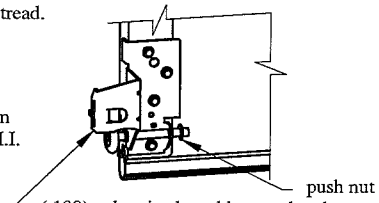

Optional low head room bottom bracket

Professional Engineer's seal provided only for verification of windload construction details

7/16/12

John E. Scates, P.E.
3121 Fairgate Drive
Carrollton, Texas 75007
TXPE 56308, F-2203

C.H.I. OVERHEAD DOORS	SCALE nts
	DATE 05-19-2012
Model 53XX/54XX/55XX/56XX/57XX/58XX	
Width: 9'-0"	
Design Pressure (DP): 49.9 pos / 56.7 neg	
C.H.I. Drawing: TZ9i-09-04503	
page 2 of 2	