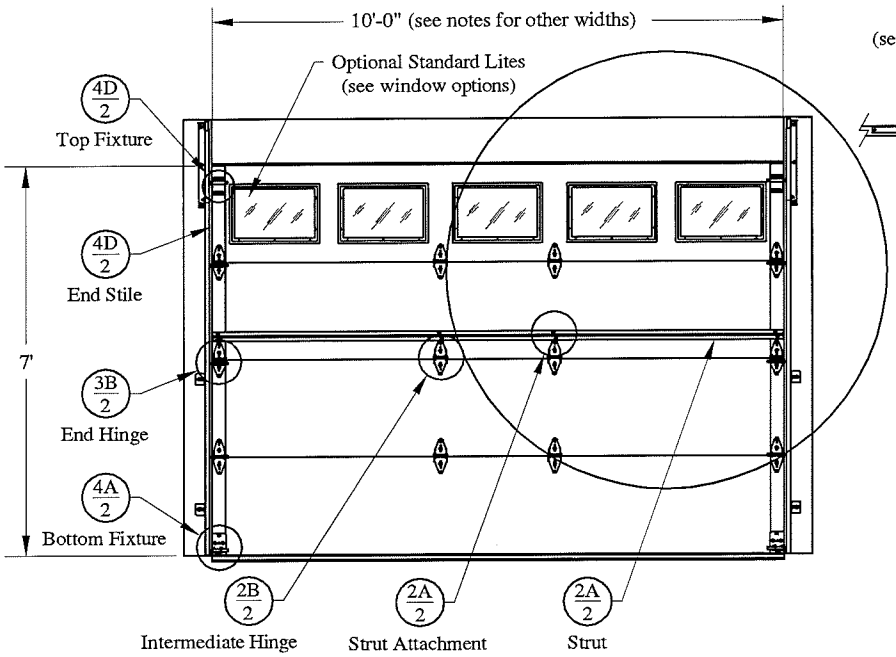

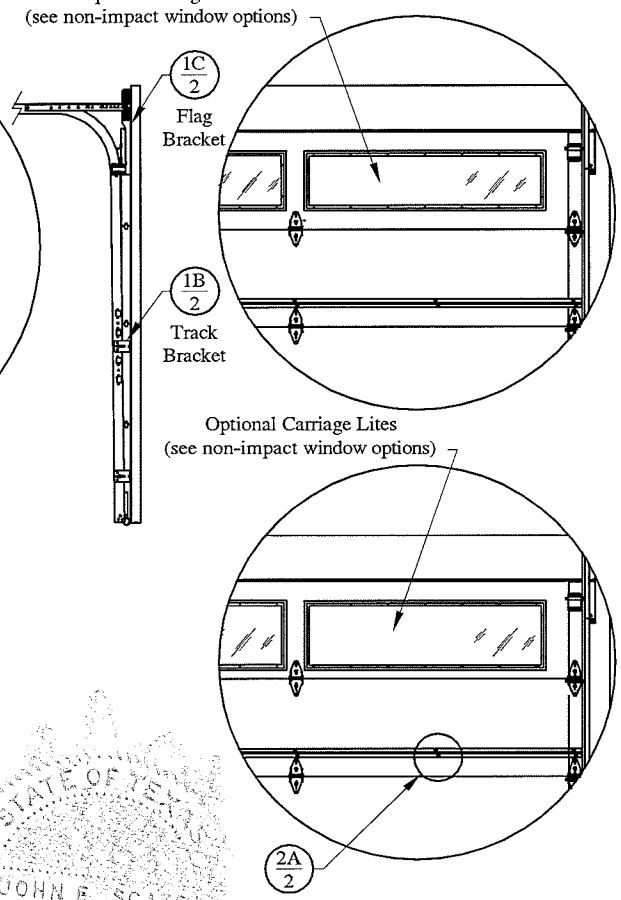

Non-Impact Window Options:
max daylight opening 39-3/8" x 12-1/2"
1/8" DSB
1/4" Tempered Glass
7/16" Insulated Glass
7/16" Tempered Insulated Glass
Impact Window Option (9 pound missile):
max daylight opening 16-3/4" x 10-1/4"
1/4" Lexan with Aluminum Frame

Door Height	Section Quantity	Strut Quantity	Trk Brkt Per Side
6'-6" to 7'-0"	4	1	2
7'-6" to 8'-0"	5	2	3
8'-3" to 8'-9"	5	2	3
9'-0" to 10'-6"	6	2	4
10'-9" to 12'-3"	7	3	5
12'-6" to 14'-0"	8	3	6
14'-3" to 15'-9"	9	4	7
16'-0" to 17'-6"	10	4	8
17'-9" to 19'-3"	11	5	9
19'-6" to 20'-0"	12	5	10

Track bracket quantities shown are for use with grade 2 or better spruce-pine-fir (SPF) or southern pine jambs.

Supplemental Instructions contain details for doors up to 20'-0" high. These are required in addition to this drawing for installation. Always use supplemental instructions in addition to this drawing during door installation.

This door has been evaluated in accordance with ASTM E 330-02 and ANSI/DASMA 108-02 and 108-05.
Supporting structural elements to be designed by registered professional engineer for specified wind loads.
If door is not electrically operated, a lock must be installed.
Maximum door height: 20'-0" Maximum section height: 21"
Per ASCE 7-02 & 7-05 as referenced by 2006 IBC 1609 and 2006 IRC 301,
Design Pressures (DP) typically meet or exceed the requirements for the following wind speeds.
These wind speeds are for 7' high doors, taller openings typically withstand higher wind speeds.

Width	Design Pressure	Exposure "B"	Exposure "C"	Windows	Backer Plates
10'-01"	+ 19.2 (psf) / - 21.6 (psf)	110 (mph)	93 (mph)	5	2 (or 1)
10'-00"	+ 19.5 (psf) / - 22.0 (psf)	111 (mph)	94 (mph)	5	2 (or 1)

Pressures must be reduced by the ratio of widths squared for a door wider than one shown.
Pressures may be increased by the simple ratio of widths for a door narrower than one shown .

STATE OF TEXAS
JOHN E. SCATES
56308
10/14/11

John E. Scates, P.E.
3121 Fairgate Drive
Carrollton, Texas 75007
TXPE 56308, F-2203

use additional strut attachment when using single center hinges on doors wider than 9'-2" .

Professional Engineer's seal provided only for verification of windload construction details

C.H.I. OVERHEAD DOORS
SCALE nts
DATE 10-14-2011
Models:
221X, 228X, 421X, 428X, 521X, 528X, 591X, 598X
10'-0" wide, 111 mph Exposure "B"
See notes for other widths and wind speeds
C.H.I. Drawing: TZ3-10-02304
page 1_of_2

Strut (if applicable) not shown for clarity.

Details on some views may have been omitted for clarity.

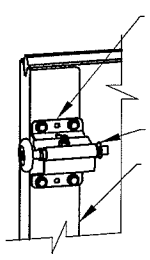

The vertical wood jamb fasteners may be counter sunk to provide a flat mounting surface. See jamb attachment details for more information about attaching jambs to structure.

2" x 7/16" (nominal) stop molding to be secured with minimum 8d nail or 2-1/2" long screw on 8" spacing. Stop molding not required when door is more than 1" wider than opening.

nominal (.0155) galvanized steel minimum

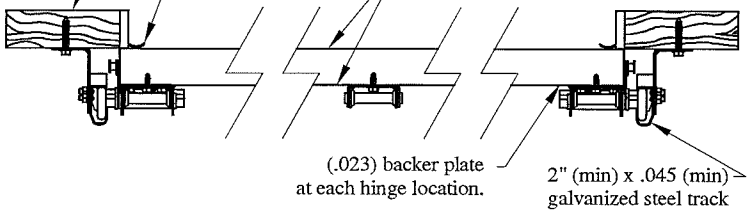

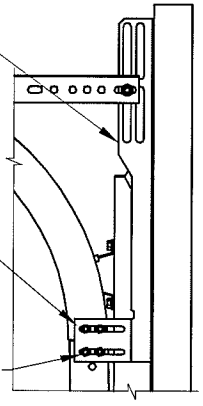

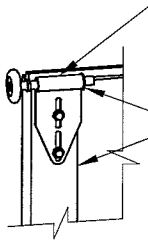

Optional low head room top bracket

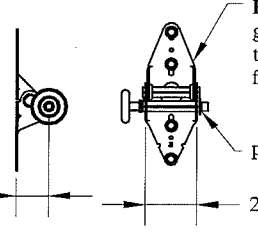

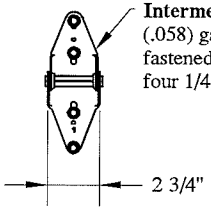

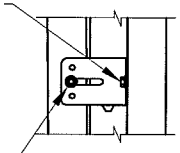

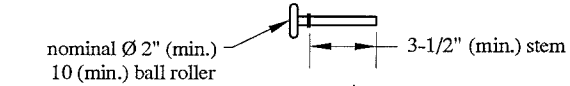

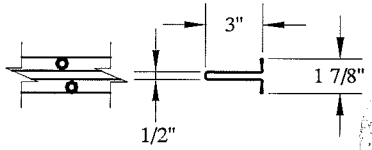

(.051) 50 ksi galvanized steel 3" strut attached with two 1/4" x 3/4" screws per stile or hinge plate.

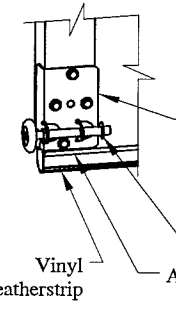

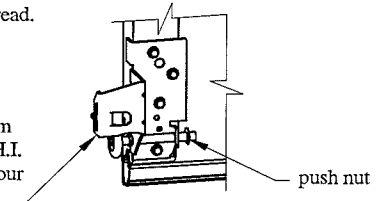

Optional low head room bottom bracket

Professional Engineer's seal provided only for verification of windload construction details

STATE OF TEXAS
JOHN E. SCATES
56308
John E. Scates
10/14/11

John E. Scates, P.E.
3121 Fairgate Drive
Carrollton, Texas 75007
TXPE 56308, F-2203

C.H.I. OVERHEAD DOORS

SCALE	nts
DATE	10-14-2011

Models:
221X, 228X, 421X, 428X, 521X, 528X, 591X, 598X

10'-0" wide, 111 mph Exposure "B"
See notes for other widths and wind speeds

C.H.I. Drawing: TZ3-10-02304
page_2_of_2