REVISIONS				
ECN	REV	DESCRIPTION	DATE	APPROVAL
30651	–	RELEASE PER ER	11/23/10	SFT
30647	A	REV PER ER	4/16/12	GRT
33704	B	REV PER ER	11/13/12	GRT

▷ NOTES

NOTES:
1. IMPACT RESISTANT GLAZING OPTION– IMPACT RESISTANT GLAZING SYSTEM MAY BE INSTALLED IN TOP OR INTERMEDIATE SECTION (WITH OR WITHOUT DECORATIVE INSERTS). GLAZING SHALL BE 1/4" POLYCARBONATE. MAXIMUM GLAZING DIMENSIONS SHALL BE 12.41" x 18.53" CUTOUT, FASTENED WITH #8 X 1" SMS: 3X ALONG THE HORIZONTAL AND 2X ALONG THE VERTICAL. SEE DETAIL J ON SHEET 2 FOR ASSEMBLY DETAILS.

2. NON-IMPACT RESISTANT GLAZING OPTION – .090" MINIMUM SSB GLAZING IN MOLDED FRAMES SCREWED TOGETHER WITH A MINIMUM OF (10) #8x1" SCREWS INSTALLED IN TOP OR INTERMEDIATE SECTION (WITH OR WITHOUT DECORATIVE INSERTS). MEETS UNIFORM STATIC WIND PRESSURES SHOWN ON THIS DRAWING. GLAZING SHALL HAVE A MAXIMUM HEIGHT OF 10.69" AND A MAXIMUM LENGTH OF 16.94". GLAZING IS NOT IMPACT RESISTANT AND DOES NOT MEET THE REQUIREMENTS FOR WIND-BORNE DEBRIS REGIONS.

3. VINYL OR WOOD DOOR STOP NAILED A MAXIMUM OF 6" O.C. MUST OVERLAP TOP AND BOTH ENDS OF PANELS MINIMUM 7/16" TO MEET NEGATIVE PRESSURES.

4. KEY LOCK OR SLIDE LOCKS REQUIRED.

5. LOUVER OPTION – .040" MINIMUM LOUVERS IN MOLDED FRAMES SCREWED TOGETHER WITH A MINIMUM OF (10) #8x1" SCREWS INSTALLED IN THE BOTTOM SECTION. LOUVERS ARE NOT IMPACT RESISTANT AND DO NOT MEET THE REQUIREMENTS FOR WIND-BORNE DEBRIS REGIONS.

6. SECTION STEEL TO HAVE A MINIMUM 25 GA THICKNESS.

7. THE DESIGN OF THE SUPPORTING STRUCTURAL ELEMENTS SHALL BE THE RESPONSIBILITY OF THE PROFESSIONAL OF RECORD FOR THE BUILDING OR STRUCTURE AND IN ACCORDANCE WITH CURRENT BUILDING CODES FOR THE LOADS LISTED ON THIS DRAWING.

8. DOOR JAMB TO BE MINIMUM 2x4 STRUCTURAL GRADE LUMBER. REFER TO JAMB CONNECTION SUPPLEMENT FOR ATTACHMENT TO SUPPORTING STRUCTURE.

9. FOR LOW HEAD ROOM LIFT CONDITIONS, TOP BRACKET SHALL BE A 13 GA LHR 7/4 TOP BRACKET WITH A MINIMUM OF (3) 1/4-14x7/8" SELF DRILLING CRIMPTITE SCREWS IN LIEU OF THE BRACKET SHOWN ON THIS DRAWING. U-BAR ON TOP SECTION SHALL BE INSTALLED ON TOP OF LHR TOP BRACKETS.

10. IN LIEU OF THE SHORT PANEL EMBOSSMENT SHOWN, LONG PANEL EMBOSSMENT, V12 PANEL EMBOSSMENT, OR NO EMBOSSMENT MAY BE USED.

"FAT" TRACK TYPE SHOWN BELOW

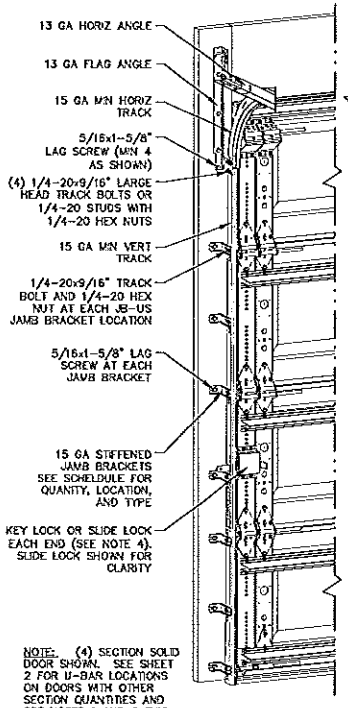

NOTE: (4) SECTION SOLID DOOR SHOWN. SEE SHEET 2 FOR U-BAR LOCATIONS ON DOORS WITH OTHER SECTION QUANTITIES AND SEE NOTES 1 AND 2 THIS SHEET FOR GLAZING OPTIONS.

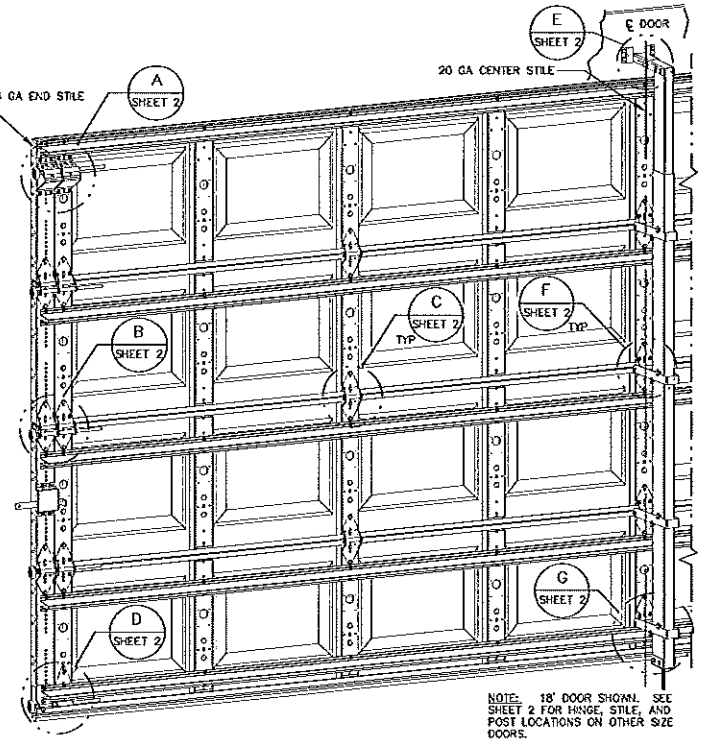

NOTE: 18' DOOR SHOWN. SEE SHEET 2 FOR HINGE, STILE, AND POST LOCATIONS ON OTHER SIZE DOORS.

STATE OF TEXAS
MARK A SAWICKI
106291
LICENSED
PROFESSIONAL ENGINEER
11/5/13

STATIC PRESSURE RATINGS	APPROVED SIZES
DESIGN PRESSURE(PSF): 46/–52	MAX WIDTH: 18'
	MAX HEIGHT: 8'
IMPACT/CYCLIC RATED: YES	MAX SECTION HEIGHT: 21"

JAMB BRACKET SCHEDULE

DOOR HEIGHT	NO. OF SECTIONS	NO. OF JAMB BRACKETS (EACH JAMB)	TRACK TYPE	LOCATION OF CENTERLINE OF JAMB BRACKETS MEASURED FROM BOTTOM OF TRACK (ALL DIMENSIONS ± 2")
6'-6"	4	6	FAT	2" (JB-US), 10" (JB-US), 21-3/4" (JB-US), 39" (JB-US), 48" (JB-US), 57-1/4" (JB-US)
		6	NGR	5" (STD), 22" (STD), 35 3/4" (STD), 54-3/4" (STD), 67" (STD), 73" (STD)
7'-0"	4	6	FAT	2" (JB-US), 10" (JB-US), 21-3/4" (JB-US), 42" (JB-US), 52-1/2" (JB-US), 63-1/4" (JB-US)
		6	NGR	5" (STD), 22" (STD), 35 3/4" (STD), 54-3/4" (STD), 67" (STD), 73" (STD)
7'-6"	5	8	FAT	2" (JB-US), 10" (JB-US), 22-3/4" (JB-US), 35" (JB-US), 45" (JB-US), 54-1/4" (JB-US), 63" (JB-US), 74-1/2" (JB-US)
		7	NGR	5" (STD), 22" (STD), 35 3/4" (STD), 54-3/4" (STD), 67" (STD), 73" (STD), 82" (STD)
8'-0"	5	8	FAT	2" (JB-US), 10" (JB-US), 25-3/4" (JB-US), 39" (JB-US), 48" (JB-US), 57-1/2" (JB-US), 66" (JB-US), 75-1/2" (JB-US)
		7	NGR	5" (STD), 22" (STD), 35 3/4" (STD), 54-3/4" (STD), 67" (STD), 73" (STD), 82" (STD)

NOTE:
(FAT AND NGR) FOLLOWING DIMENSION DENOTES SLOTTED JAMB BRACKET ATTACHED TO TRACK WITH 1/4-20x9/16" TRACK BOLT AND NUT AS SHOWN ABOVE.

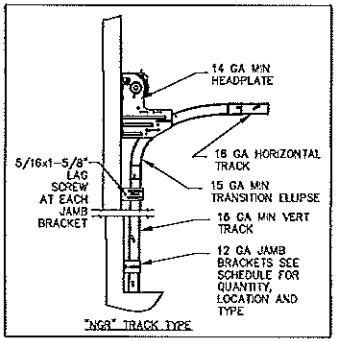

"NGR" TRACK TYPE

SUPERIMPOSED DESIGN PRESSURE LOADS ON SUPPORTING STRUCTURE

MAX DOOR WIDTH	MAX DOOR HEIGHT	UNIFORM LOAD EACH JAMB (PLF)	POINT LOAD AT HEADER AND SLAB AT EACH POST LOCATION (LBS)
17'-0"	7'-0"	+185.5/-209.6	+1507.4/-1712.9
	8'-0"	+185.5/-209.6	+1704.0/-1936.3
18'-0"	7'-0"	+190.7/-215.7	+1637.0/-1850.5
	8'-0"	+190.7/-215.7	+1860.3/-2102.9

SERIES 170–177, 180–187

MARK A. SAWICKI, PE
2501 S. STATE HWY 121, SUITE 200
LEWISVILLE, TX 75067
FL PE 72613
TX PE 106291

PROFESSIONAL ENGINEER'S SEAL PROVIDED ONLY FOR VERIFICATION OF WIND LOAD CONSTRUCTION DETAILS.

THE DRAWINGS AND ALL OTHER INFORMATION CONTAINED HEREIN ARE THE CONFIDENTIAL AND PROPRIETARY PROPERTY OF OVERHEAD DOOR CORPORATION AND ITS AFFILIATED COMPANIES. THIS DRAWING AND INFORMATION, IN WHOLE OR IN PART, MAY NOT BE COPIED IN ANY MANNER OR DISCLOSED TO ANYONE WITHOUT THE PRIOR WRITTEN CONSENT OF OVERHEAD DOOR CORPORATION. NO DISCLOSURE OF ANY OF THIS DRAWING OR INFORMATION IS INTENDED TO OPERATE AS A LICENSE OR AUTHORIZATION TO USE IT FOR ANY PURPOSE WITHOUT THE SPECIFIC WRITTEN CONSENT OF OVERHEAD DOOR CORPORATION.

REF DWG	USED ON

TYPE AREA PROJECTION

THIS DRAWING AND TITLE BLOCK UNLESS OTHERWISE SPECIFIED ARE TO BE EXPRESSED IN U.S. CUSTOMARY UNITS

TOLERANCES UNLESS OTHERWISE SPECIFIED

HOLE DIAMETER	WHOLE NUMBERS:	± .25
UNDER .251 +.004/-.003	.X	± .1
.251 TO .500 +.006/-.003	.XX	± .03
OVER .500 +.008/-.003	.XXX	± .010
FRACTIONS	ANGLES:	± .5°
± 1/16		

FINISH	UNIT OF MEASURE	MATERIAL
N/A	EACH	NONE

	NAME	DATE
DRAWN BY:	G. TAYLOR	10/15/10
CHECKED BY:	M. SAWICKI	10/25/10
APPROVED BY:	F. TJONG	11/23/10

DRAWING TITLE: SERIES 170, 180WL WS9, 18' MAX WIDE

DRAWING NUMBER: D-411054

SCALE: N.T.S. SHEET 1 OF 2

REVISIONS				
ER	REV	DESCRIPTION	DATE	APPROVAL
500551	–	RELEASE PER ER	11/23/10	SFT
35547	A	REV PER ER	4/16/12	GRT
35704	B	REV PER ER	11/13/12	GRT

▷ NOTES

13 GA ROLLER SLIDE ATTACHED TO BRACKET WITH 5/16-18 BOLT & NUT IN CENTER SLOT AND 1/4-20x9/16" TRACK BOLT & 1/4-20 HEX NUT THROUGH ANY TWO ALIGNING HOLES

(2) 13 GA COMMERCIAL "A" FRAME TOP BRACKETS EACH ATTACHED WITH (4) 1/4-14x7/8" SELF DRILLING CRIMPTITE SCREWS

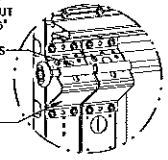

DETAIL A

ADD (2) 1/4-14x7/8" SELF DRILLING CRIMPTITE SCREWS (INSIDE OF EACH INSIDE END HINGE)

2" STEEL ROLLER WITH 9" GRADE 1144 OR EQUIVALENT STEM

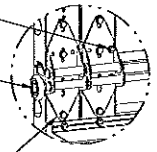

DETAIL B

(2) 14 GA WIDE BODY END HINGES EACH ATTACHED WITH (4) 1/4-14x5/8" SELF TAPPING SCREWS

14 GA WIDE BODY INTERMEDIATE HINGE ATTACHED WITH (4) 1/4-14x5/8" SELF TAPPING SCREWS

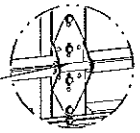

DETAIL C

12 GA EXTENSION BRACKET ATTACHED WITH (3) 1/4-14x7/8" SELF DRILLING CRIMPTITE SCREWS (2 THROUGH STRUT AND BRACKET)

14 GA BOTTOM BRACKET ATTACHED WITH (2) 1/4-14x7/8" SELF DRILLING CRIMPTITE SCREWS THROUGH STRUT AND BOTTOM BRACKET AND (1) 1/4-14x5/8" SELF DRILLING TAMPER RESISTANT SCREW

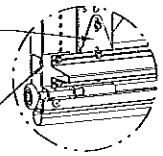

DETAIL D

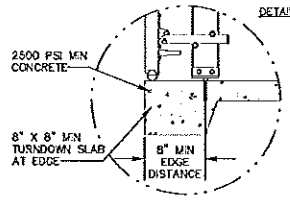

DETAIL H

CENTER STILE, INTERMEDIATE HINGE, & POST LOCATIONS

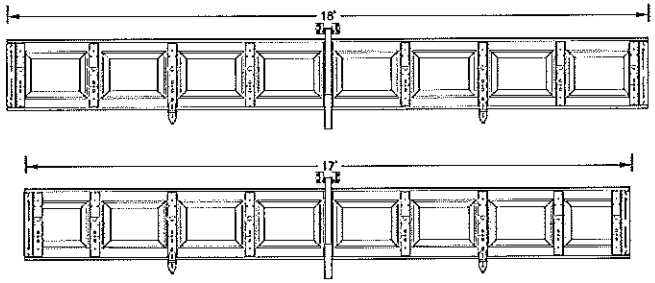

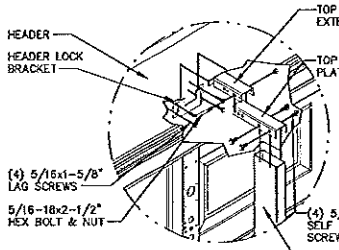

DETAIL E

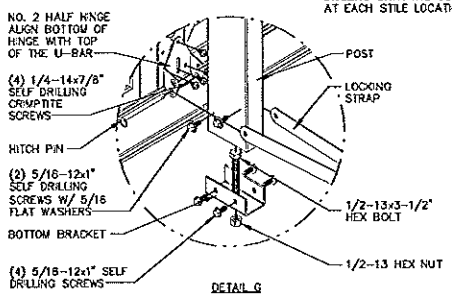

DETAIL G

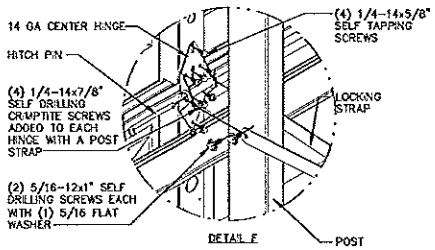

DETAIL F

U-BAR LOCATIONS

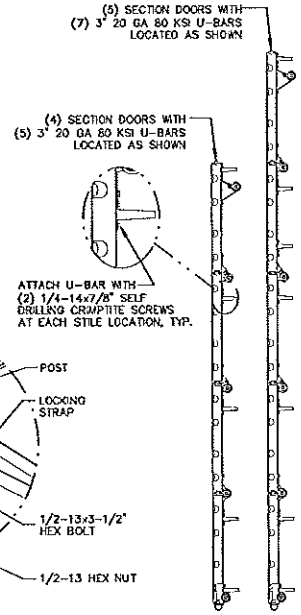

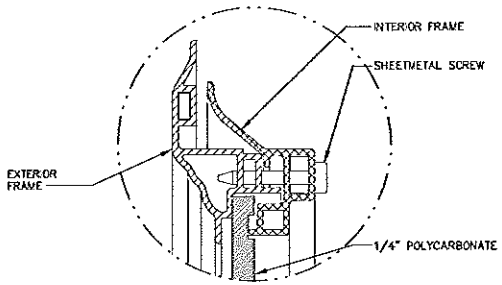

DETAIL J

STATE OF TEXAS
MARK A SAWICKI
106291
LICENSED
PROFESSIONAL ENGINEER
4/5/13

MARK A. SAWICKI, PE
2501 S. STATE HWY 121, SUITE 200
LEWISVILLE, TX 75067
FL PE 72613
TX PE 106291

PROFESSIONAL ENGINEER'S SEAL PROVIDED ONLY FOR VERIFICATION OF WIND LOAD CONSTRUCTION DETAILS.

THE DRAWINGS AND ALL OTHER INFORMATION CONTAINED HEREIN ARE THE CONFIDENTIAL AND PROPRIETARY PROPERTY OF OVERHEAD DOOR CORPORATION AND ITS AFFILIATED COMPANIES. THIS DRAWING AND INFORMATION, IN WHOLE OR IN PART, MAY NOT BE COPIED IN ANY MANNER OR DISCLOSED TO ANYONE WITHOUT THE PRIOR WRITTEN CONSENT OF OVERHEAD DOOR CORPORATION. NO DISCLOSURE OF ANY OF THIS DRAWING OR INFORMATION IS INTENDED TO OPERATE AS A LICENSE OR AUTHORIZATION TO USE IT FOR ANY PURPOSE WITHOUT THE SPECIFIC WRITTEN CONSENT OF OVERHEAD DOOR CORPORATION.

REF DWG	USED ON

TWO MILE PROJECTION

ASME Y14.100 AND Y14.5 APPLY UNLESS OTHERWISE SPECIFIED DIMENSIONS ARE IN U.S. CUSTOMARY UNITS.

TOLERANCES UNLESS OTHERWISE SPECIFIED

HOLE DIAMETER	WHOLE NUMBERS:	± .25
UNDER .251 +.004/–.003	.X	± .1
.251 TO .500 +.006/–.003	.XX	± .03
OVER .500 +.008/–.003	.XXX	± .010
FRACTIONS ± 1/16	ANGLES:	± .5°

FINISH: N/A

UNIT OF MEASURE: EACH

MATERIAL: NONE

NAME	DATE
DRAWN BY: G. TAYLOR	10/15/10
CHECKED BY: M. SAWICKI	10/25/10
APPROVED BY: F. TJONG	11/23/10

DRAWING TITLE: SERIES 170, 180WL WS9, 18' MAX WIDE

DRAWING NUMBER: D-411054

SCALE: N.T.S. SHEET 2 OF 2