REVISIONS			
REV	DESCRIPTION	DATE	APPROVAL

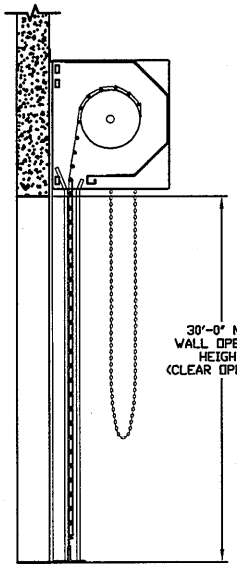

LEFT END VIEW

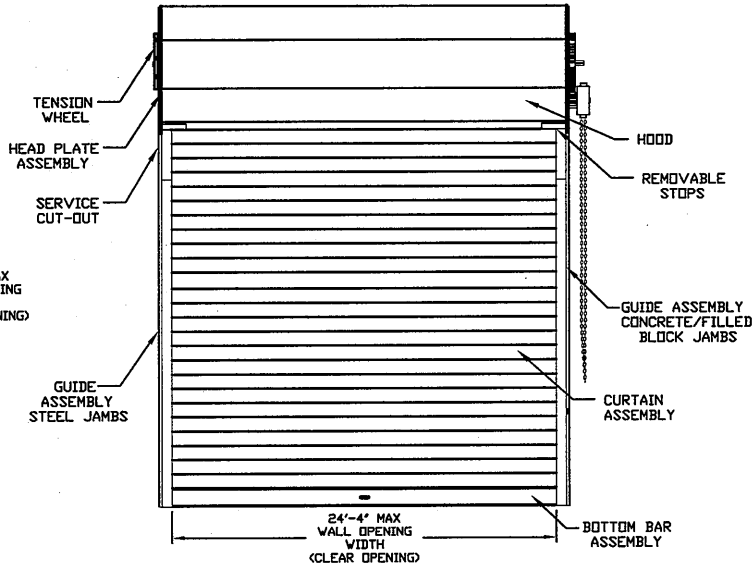

INSIDE ELEVATION

RIGHT HAND OPERATION SHOWN - LEFT HAND OPPOSITE

ALLOWABLE TRANSVERSE DESIGN WIND LOADS (PSF)
FOR 22 GAUGE CURTAIN (TESTED SLAT GAUGE)

MAX DOOR WIDTH	MAX DOOR HEIGHT (FT)	DESIGN WIND LOADS (PSF)	MAX DOOR WIDTH	MAX DOOR HEIGHT (FT)	DESIGN WIND LOADS (PSF)
6'-4"	30	+/- 57.6	16'-4"	30	+/- 40
7'-4"	30	+/- 57.6	17'-4"	30	+/- 36.1
8'-4"	30	+/- 57.6	18'-4"	30	+/- 32.8
9'-4"	30	+/- 57.6	19'-4"	30	+/- 30.0
10'-4"	30	+/- 57.6	20'-4"	30	+/- 27.5
11'-4"	30	+/- 57.6	21'-4"	30	+/- 29.9
12'-4"	30	+/- 57.6	22'-4"	30	+/- 27.8
13'-4"	30	+/- 57.6	23'-4"	30	+/- 25.9
14'-4"	30	+/- 50.4	24'-4"	30	+/- 24.2
15'-4"	30	+/- 44.7			

ALLOWABLE TRANSVERSE DESIGN WIND LOADS (PSF)
FOR 20 GAUGE CURTAIN

MAX DOOR WIDTH	MAX DOOR HEIGHT (FT)	DESIGN WIND LOADS (PSF)	MAX DOOR WIDTH	MAX DOOR HEIGHT (FT)	DESIGN WIND LOADS (PSF)
6'-4"	30	+/- 59.4	16'-4"	30	+/- 40.9
7'-4"	30	+/- 59.4	17'-4"	30	+/- 36.8
8'-4"	30	+/- 59.4	18'-4"	30	+/- 33.4
9'-4"	30	+/- 59.4	19'-4"	30	+/- 30.5
10'-4"	30	+/- 59.4	20'-4"	30	+/- 28.0
11'-4"	30	+/- 59.4	21'-4"	30	+/- 30.4
12'-4"	30	+/- 59.4	22'-4"	30	+/- 28.1
13'-4"	30	+/- 59.4	23'-4"	30	+/- 26.2
14'-4"	30	+/- 51.9	24'-4"	30	+/- 24.4
15'-4"	30	+/- 45.8			

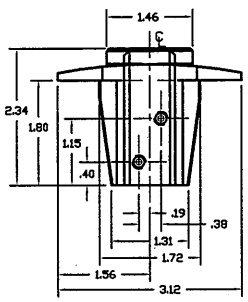

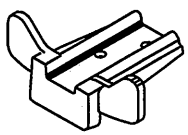

WINDLOCK

FERRITIC MALLEABLE IRON
GRADE 32510, PER ASTM A47
ZINC COATED

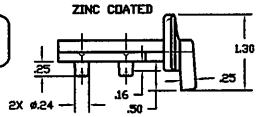

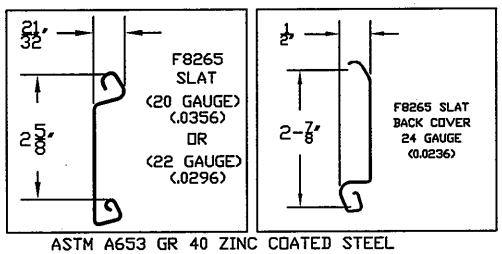

ASTM A653 GR 40 ZINC COATED STEEL
PRE-PAINTED WITH FULL COAT OF PRIMER
AND BAKED SILICONIZED PLOYESTER FINISH COAT

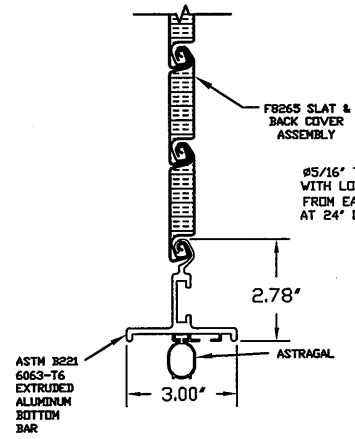

EXTRUDED ALUMINUM
BOTTOM BAR ASSEMBLY
FOR OPENING WIDTHS ≤16'-4"

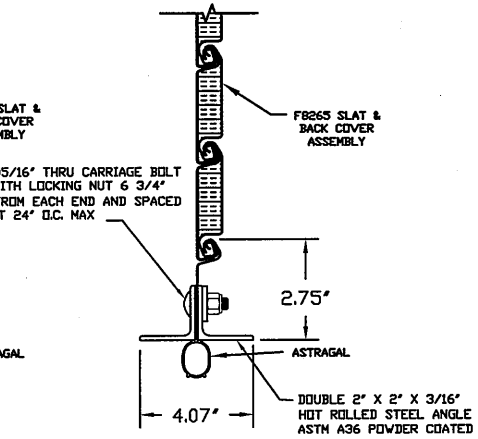

STEEL DOUBLE ANGLE
BOTTOM BAR ASSEMBLY

SEE SHEET 2 FOR NOTES

CERTIFIED WIND LOAD RATED
ID25/I8265, ANGLE GUIDES DOOR ASSEMBLY,
INSULATED SLAT
MAX. SIZE 24'-4" X 30'-0"

UNLESS OTHERWISE SPECIFIED, DIMENSIONS ARE IN INCHES AND TOLERANCES ARE

ANGLES	HOLE DIAMETERS	
± 0° 30'	UNDER .251	+.004 -.003
DECIMAL .XX ±.03 .XXX ±.005	.251 TO .500	+.006 -.003
FRACTIONS ± 1/16	OVER .500	+.008 -.003

APPROVALS		DATE
DRAWN	BECKY NELSON	4-28-09
CHECKED	CURT SCHROEDER	6-15-09

APPROVALS		DATE
APPROVED	CURT SCHROEDER	6-15-09

PART NUMBER	NA
MATERIAL	NA
DRAWING NUMBER	RS9005
APPLIED FEED	NA
UNIT OF MEASURE	NA
SIZE	B
SCALE	NONE
SHEET 1 OF	2
REV	—

THESE CONFIDENTIAL DOCUMENTS SUBMITTED BY JANUS CONTAIN INFORMATION OF A PROPRIETARY NATURE AND MAY NOT BE REPRODUCED OR USED TO MANUFACTURE ANYTHING IN PART OR IN WHOLE FOR ANY PURPOSE OTHER THAN THAT WHICH IS NECESSARY FOR PREPARATION OF BIDS OR ENGINEERING WITHOUT THE EXPRESS PERMISSION OF JANUS WHICH MAY RECALL DOCUMENTS AT ANY TIME.

JANUS INTERNATIONAL CORPORATION®
134 Janus International Blvd. Temple, GA 30179
770-562-2850/Fax 770-562-1991
© 2009 Janus International Corporation All Rights Reserved

STATE OF TEXAS
JOSEPH H. DIXON, JR.
18627
LICENSED
PROFESSIONAL ENGINEER

10/2/10

REVISIONS			
REV	DESCRIPTION	DATE	APPROVAL

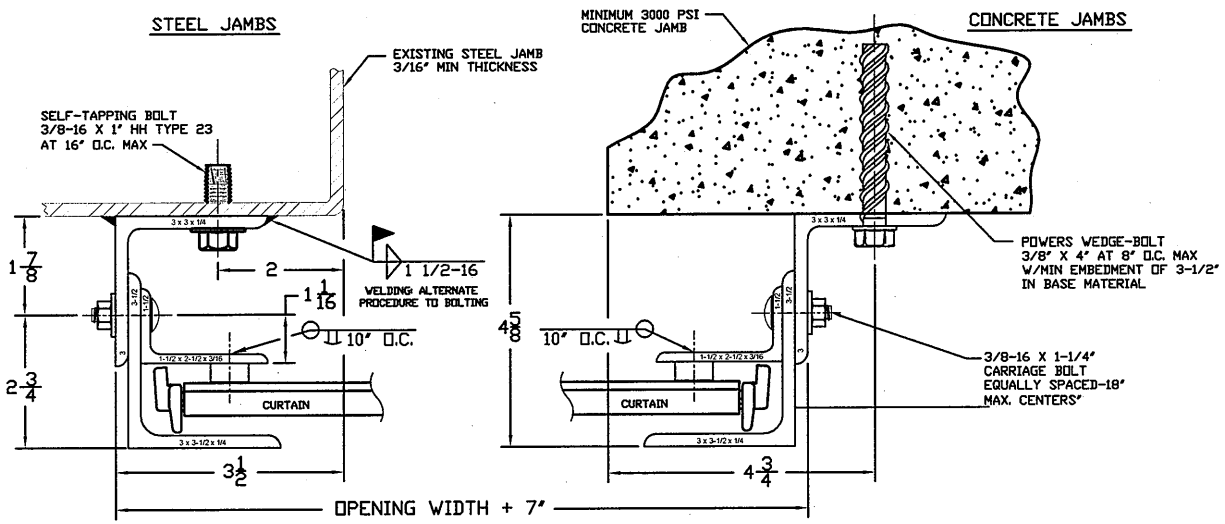

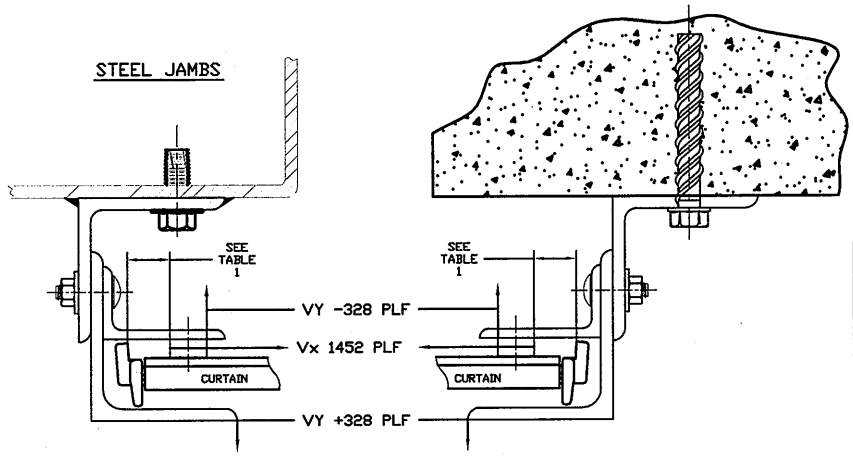

SUPERIMPOSED LOAD DIAGRAM

TABLE 1

OPENING WIDTHS	WINDLOCK SLIP
≤ 11'-4"	3/8"
>11'-4", ≤ 20'-4"	5/8"
>20'-4" ≤ 24'-4"	7/8"

GENERAL NOTES

1. THIS ROLLING DOOR SYSTEM IS DESIGNED IN ACCORDANCE WITH THE FLORIDA BUILDING CODE.
2. THIS ROLLING DOOR HAS BEEN TESTED IN ACCORDANCE WITH ASTM E-330 AND COMPLIES WITH ANSI/DASMA 108.
   DESIGN LOAD = $^{+40}_{-40}$ PSF 22 GA CURTAIN F8265 SLAT
3. WIND LOADS FOR BUILDING OPENINGS SHALL BE DETERMINED BY A PROFESSIONAL ENGINEER USING APPROPRIATE WIND SPEED AND DESIGN CRITERIA. THIS DOOR MAY BE USED WHERE THE DESIGN LOAD MEETS OR EXCEEDS THE DESIGN LOAD FOR THE BUILDING OPENING.
4. SUPERIMPOSED LOADS ON THE JAMBS FROM THIS DOOR ARE DESIGNED AS Vx AND Vy HEREIN. CONTRACTORS SHALL HAVE BUILDING ENGINEER VERIFY ADEQUACY OF BUILDING STRUCTURE TO RESIST SUPERIMPOSED LOADS Vx, Vy AND BRACKET LOADS SHOWN.
5. ALL WELDING SHALL BE PERFORMED BY QUALIFIED WELDERS IN ACCORDANCE WITH A.W.S. SPECIFICATIONS, LATEST EDITION. ALL WELDING ELECTRODES SHALL CONFORM TO A.W.S. A5.1 GRADE E-70.
6. ALL BOLTS AND WASHERS SHALL BE GALVANIZED OR STAINLESS STEEL WITH A MINIMUM TENSILE STRENGTH OF 60 KSI.
7. DESIGN BASED ON CERTIFIED TESTING LABORATORIES, INC., TEST REPORT NO. CTLA1959W-1 (STEEL BOTTOM BAR) DATED MAY 6, 2009.
   NO. CTLA1959W (ALUMINUM BOTTOM BAR) DATED MAY 6, 2009.
8. ANCHOR NOTES:
   A. EMBEDMENT LENGTH DOES NOT INCLUDE STUCCO FINISH.
   B. ANCHORS SHALL BE INSTALLED IN ACCORDANCE WITH MANUFACTURER'S SPECIFICATIONS.
9. DOOR OPERATION TYPE TO BE PUSH-UP, HAND CHAIN, HAND CRANK OR ELECTRIC.
10. GUIDE TO JAMB ATTACHMENT FASTENERS IN OPENING AREA BEGIN 4" MIN./6" MAX. FROM FLOOR AND END 4" BELOW TOP OF WALL OPENING.
11. TEST DOOR WALL OPENING SIZE: 16'-4" x 10'-0".
12. WINDLOCKS ATTACHED TO EVERY OTHER SLAT BEGINNING AT BOTTOM SLAT (ALTERNATING). WINDLOCKS FASTENED TO SLATS UTILIZING 2 SWAGED MALLEABLE CAST STUDS, 0.24" BASE DIAMETER.
13. INSULATION MATERIAL: FOAM IN PLACE POLYURETHANE OR EXPANDED POLYSTYRENE (EPS)

CERTIFIED WIND LOAD RATED
ID25/I8265, ANGLE GUIDES DOOR ASSEMBLY,
INSULATED SLAT
MAX. SIZE 24'-4" X 30'-0"

UNLESS OTHERWISE SPECIFIED, DIMENSIONS ARE IN INCHES AND TOLERANCES ARE:
ANGLES ± 0° 30'
DECIMAL .XX ±.03 .XXX ±.005
FRACTIONS ± 1/16
HOLE DIAMETERS: UNDER .251 +.004 -.003; .251 TO .500 +.006 -.003; OVER .500 +.009 -.003

APPROVALS	DATE	APPROVALS	DATE	PART NUMBER	DRAWING NUMBER
DRAWN BECKY NELSON	4-28-09	APPROVED CURT SCHROEDER	6-15-09	NA	RS9005
CHECKED CURT SCHROEDER	6-15-09			MATERIAL NA	APPLIED FINISH NA

UNIT OF MEASURE	SIZE	SCALE	SHEET OF	REV
NA	B	NONE	2 OF 2	—

THESE CONFIDENTIAL DOCUMENTS SUBMITTED BY JANUS CONTAIN INFORMATION OF A PROPRIETARY NATURE AND MAY NOT BE REPRODUCED OR USED TO MANUFACTURE ANYTHING IN PART OR IN WHOLE FOR ANY PURPOSE OTHER THAN THAT WHICH IS NECESSARY FOR PREPARATION OF BIDS OR ENGINEERING WITHOUT THE EXPRESS PERMISSION OF JANUS WHICH MAY RECALL DOCUMENTS AT ANY TIME.

JANUS INTERNATIONAL CORPORATION®
134 Janus International Blvd. Temple, GA 30179
770-562-2850/Fax 770-562-1991
© 2009 Janus International Corporation All Rights Reserved

STATE OF TEXAS
JOSEPH H. DIXON, JR.
18627
LICENSED
PROFESSIONAL ENGINEER
10/2/10