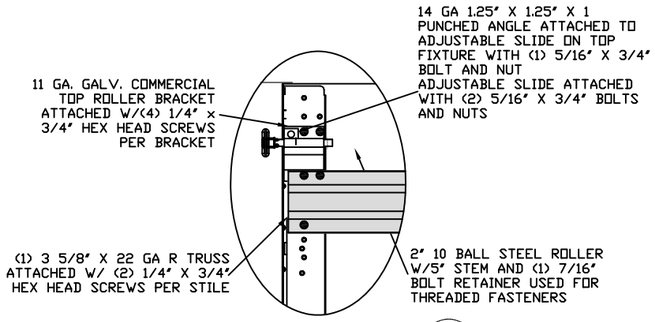

TYPICAL TOP FIXTURES (1)
N.T.S.

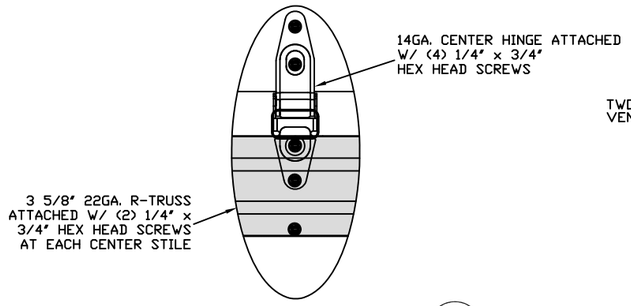

TYPICAL CENTER HINGE (2)
N.T.S.

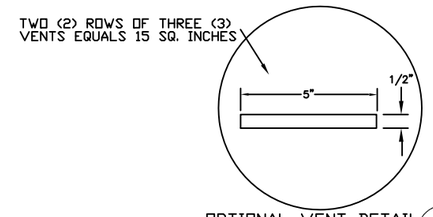

OPTIONAL VENT DETAIL (5)
N.T.S.

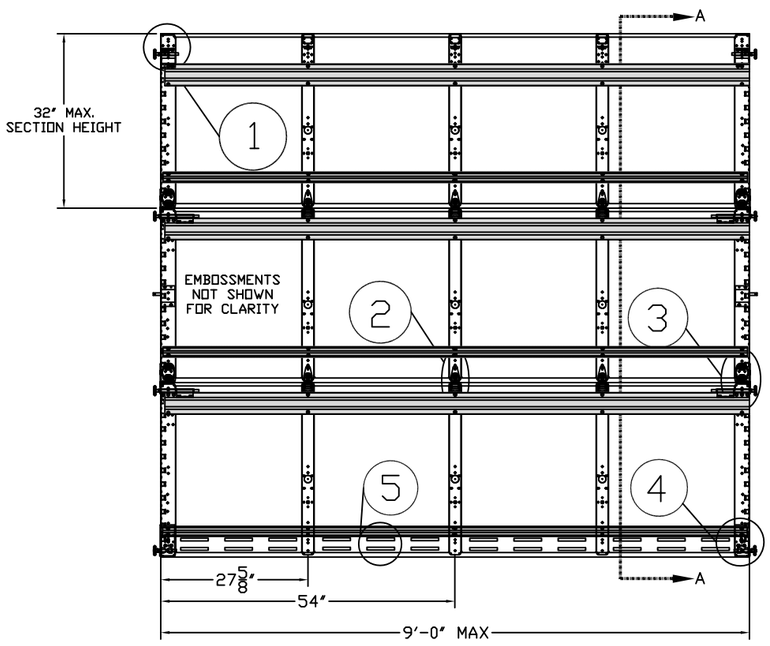

INSIDE ELEVATION
N.T.S.

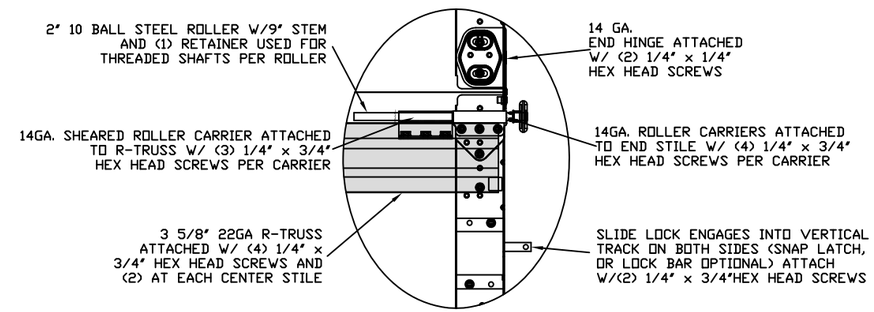

TYPICAL END HINGE (3)
N.T.S.

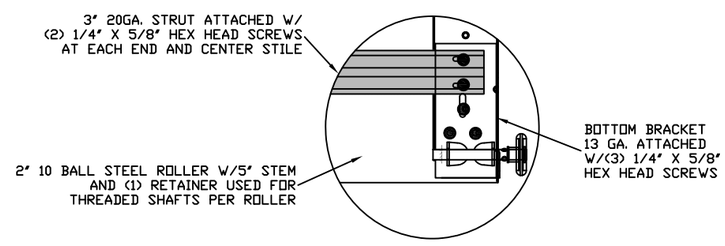

TYPICAL BOTTOM BRACKET (4)
N.T.S.

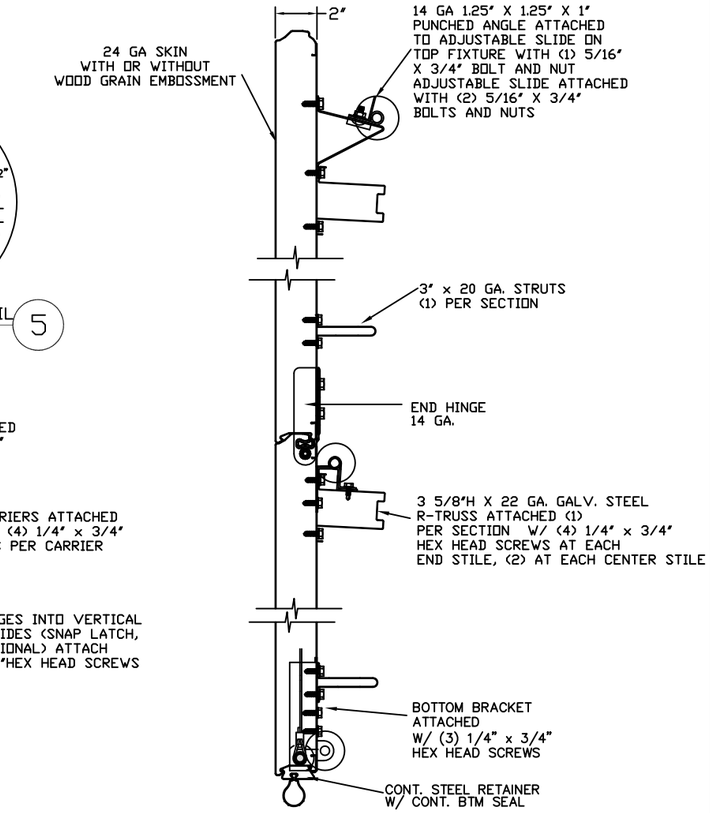

SECTION A–A (SIDE VIEW)
N.T.S.

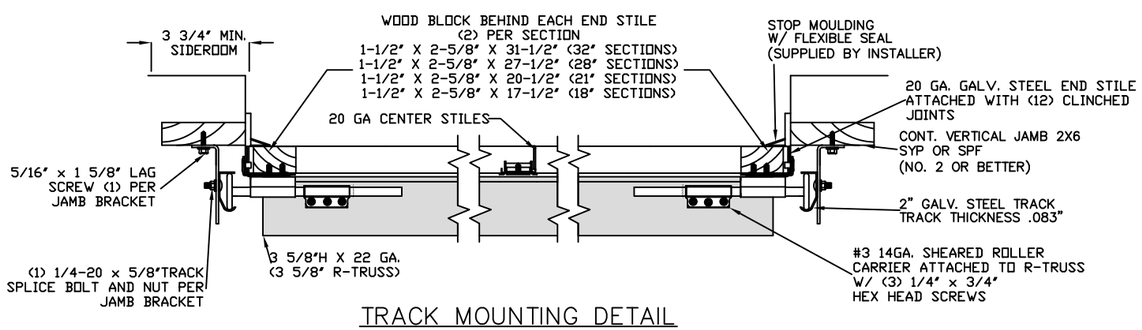

TRACK MOUNTING DETAIL
N.T.S.

LARGE MISSILE IMPACT RESISTANT

THE METHOD OF TESTING WAS IN SUBSTANTIAL CONFORMANCE WITH THE PROCEDURE DESCRIBED IN ASTM E330, AND TAS 201, 201, 203. THE PRESSURES SHOWN ON THE DRAWINGS WERE CALCULATED USING ASCE 7–98/02/05 WITH THE FOLLOWING PARAMETERS (5 FEET OF DOOR WIDTH IN THE END ZONE, ROOF AT ANY SLOPE):

WIND SPEED (MPH)	182	165	157	150	144
EXPOSURE LEVEL	B	C	C	D	D
MEAN ROOF HEIGHT	30'	15'	25'	15'	25'

REV	DESCRIPTION OF REVISIONS	DATE	BY
A	UPDATED WJATS AND ADDED ASCE MPH DETAIL	1/19/12	RLR

MAX SIZE
9' x 14'

DESIGN LOADS
+54.4 PSF
–62.0 PSF

LARGE MISSLE
IMPACT
RESISTANCE

STATE OF TEXAS
THOMAS L. SHELMERDINE
85829
LICENSED
PROFESSIONAL ENGINEER
03/01/2012

Amarr

165 CARRIAGE COURT WINSTON-SALEM, N.C. 27105 WWW.AMARR.COM

Model #500 Classica 1000, 2000 FLUSH AND BEAD PANEL

SIZE	DRAWN BY	SKW	DATE	09/11/08	DRAWING NUMBER
B	CHECKED BY	SKW	DATE	09/11/08	IRC-5309-185-21-1

ENGINEER: THOMAS L. SHELMERDINE P.E. LIC. No. 0048579 | SHEET 1 OF 3

SPECIFICATIONS AND NOTES

1. ALL THE LOAD FROM THE DOOR IS TRANSFERRED TO THE VERTICAL TRACK, FROM THE TRACK THE LOAD IS TRANSFERRED TO THE VERTICAL JAMBS. THE HORIZONTAL JAMB OR HEADER RECEIVES NO PORTION OF THE LOAD TRANSFERRED FROM THE DOOR.
2. EACH VERTICAL JAMBS RECEIVES MAXIMUM DESIGN LOADS OF: +244.8 LBS/FT & −279.0 LBS/FT
3. DOOR AND HARDWARE WILL BE DESIGNED, MANUFACTURED AND INSTALLED WITH STANDARDS AS SET FORTH BY DASMA.
4. DOOR SECTIONS SHALL BE 24 GA. MIN. EXTERIOR SKIN ROLLED FORMED, W/ BAKED ON POLYESTER FINISH
5. DOORS UP TO 14'0" HIGH USE (1) 3 5/8" R−TRUSS AND (1) 3" 20 GA. STRUT PER SECTION
6. REFER TO TABLE 1 FOR TRACK ATTACHMENT SCHEDULE
7. SUPPORTING STRUCTURAL ELEMENTS SHALL BE DESIGNED BY A REGISTRED PROFESSIONAL ENGINEER FOR WIND LOADS INDICATED ON THIS DRAWING IN ADDITION TO OTHER LOADINGS.

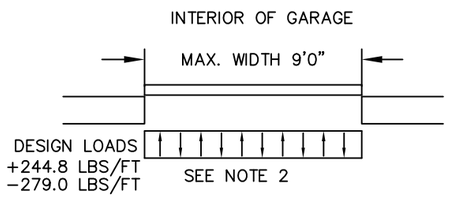

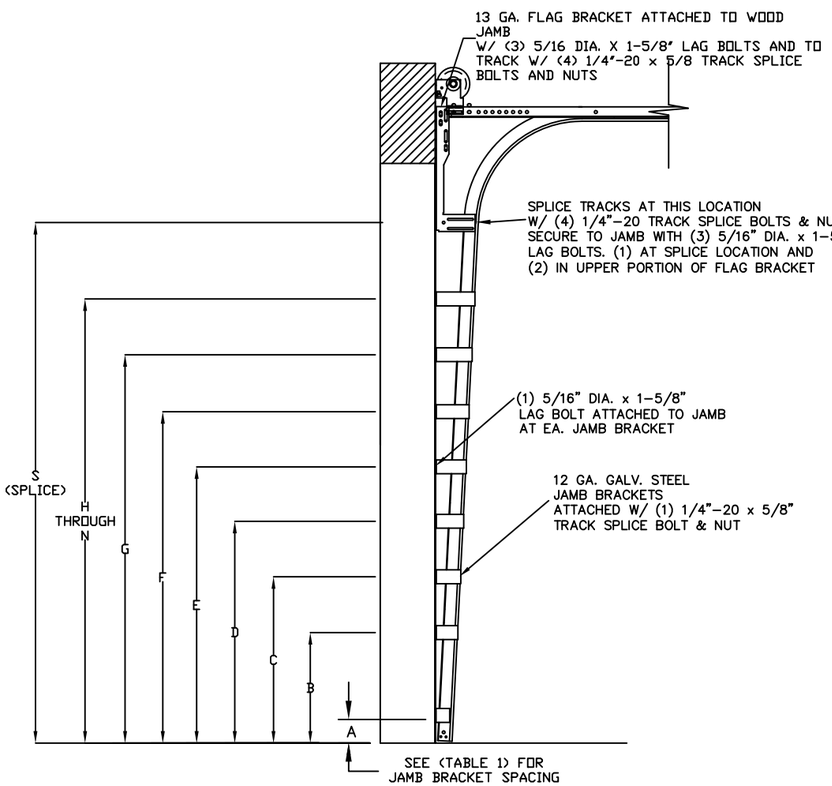

TRACK CONFIGURATION FOR 6'6" UP TO 14' TALL DOORS

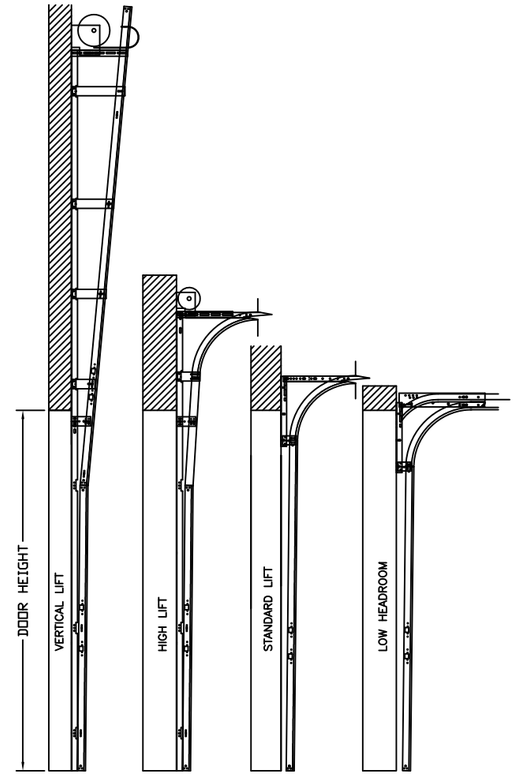

AVAILABLE TRACK CONFIGURATIONS
N.T.S.

WOOD JAMB ATTACHMENT TO STRUCTURE

2 X 6 VERTICAL JAMB ATTACHMENT TO WOOD FRAME STRUCTURE
5/16" X 3" LAG SCREWS STARTING 6" FROM ENDS THEN 20" O.C. (1 1/2" EMBEDMENT)

2 X 6 VERTICAL JAMB ATTACHMENT TO 2,000 PSI CONCRETE
HILTI KWIK BOLT 3/8" X 4" STARTING 6" FROM ENDS THEN 24" O.C. (2 1/2" EMBEDMENT)
HILTI SLEEVE ANCHOR 3/8" X 2-3/4" STARTING 6" FROM ENDS THEN 18" O.C. (1 1/4" EMBEDMENT)
ITW/RAMSET REDHEAD (TRU-BOLT) 3/8" X 4" STARTING 6" FROM ENDS THEN 24" O.C. (2 1/2" EMBEDMENT)

2 X 6 VERTICAL JAMB ATTACHMENT TO HOLLOW C-90 BLOCK
SIMPSON 1/4" X 3" TITEN SCREWS STARTING 6" FROM ENDS, USE PAIRS OF FASTENERS (3" APART) AT 8" O.C. (1 1/2" EMBEDMENT)
HILTI 1/4" X 2-3/4" KWIK-CON II+ SCREWS STARTING 6" FROM ENDS, USE PAIRS OF FASTENERS (3" APART) AT 8" O.C. (1 1/4" EMBEDMENT)

2 X 6 VERTICAL JAMB ATTACHMENT TO GROUTED C-90 BLOCK (2000 PSI GROUT)
HILTI SLEEVE ANCHOR 3/8" X 2-3/4" STARTING 6" FROM ENDS THEN 20" O.C. (1 1/4" EMBEDMENT) (OR, USE FASTENERS FOR HOLLOW C-90 BLOCK)

*LAGS AND BOLTS CAN BE COUNTERSUNK TO PROVIDE A FLUSH MOUNTING SURFACE.
*PREPARATION OF WOOD JAMBS BY OTHERS

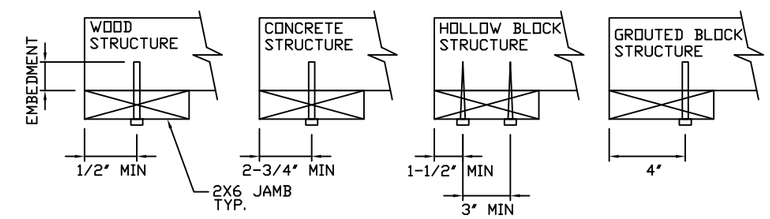

TOP FIXTURE REINFORCEMENT ILLUSTRATION

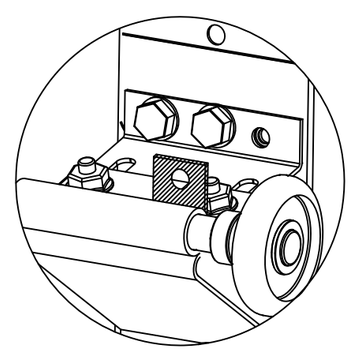

TOP FIXTURE ADDER PIECE

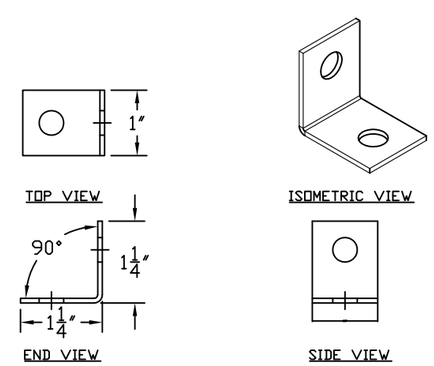

NOTES:
1. ZINC COATING
2. MATERIAL YIELD STRENGTH: 35−49 KSI.
3. MATERIAL HARDNESS: 50−60 ROCKWELL B.
4. 1.25" X 1.25" X 1" X 14 GA PUNCHED ANGLE MAY BE USED

REV	DESCRIPTION OF REVISIONS	DATE	BY
A	UPDATED WJATS AND ADDED ASCE MPH DETAIL	1/19/12	RLR

MAX SIZE
9' x 14'

DESIGN LOADS
+54.4 PSF
−62.0 PSF

LARGE MISSLE IMPACT RESISTANCE

Amarr

165 CARRIAGE COURT WINSTON-SALEM, N.C. 27105 WWW.AMARR.COM

Model #500 Classica 1000, 2000 FLUSH AND BEAD PANEL

SIZE	DRAWN BY SKW	DATE 09/11/08	DRAWING NUMBER
B	CHECKED BY SKW	DATE 09/11/08	IRC-5309-185-21-1
ENGINEER: THOMAS L. SHELMERDINE P.E. LIC. No. 0048579			SHEET 2 OF 3

TABLE 1

DOOR	TRACK ATTACHMENT OPTION 1														SPLICE
HEIGHT	A	B	C	D	E	F	G	H	I	J	K	L	M	N	S
6' 6"	3"	14"	27"	38"	46"	56"	64"								70"
7'	3"	14"	27"	38"	46"	56"	68"								76"
7' 6"	3"	14"	27"	38"	46"	56"	68"	78"							82"
8'	3"	14"	27"	38"	46"	56"	68"	78"							88"
8' 6"	3"	14"	27"	38"	46"	56"	68"	78"	88"						94"
9'	3"	14"	27"	38"	46"	56"	68"	78"	88"						100"
9' 6"	3"	14"	27"	38"	46"	56"	68"	78"	88"	98"					106"
10'	3"	14"	27"	38"	46"	56"	68"	78"	88"	100"					112"
10' 6"	3"	14"	27"	38"	46"	56"	68"	78"	88"	100"	110"				118"
11'	3"	14"	27"	38"	46"	56"	68"	78"	88"	100"	110"				124"
11' 6"	3"	14"	27"	38"	46"	56"	68"	78"	88"	100"	110"	120"			130"
12'	3"	14"	27"	38"	46"	56"	68"	78"	88"	100"	110"	122"			136"
12'6"	3"	14"	27"	38"	46"	56"	68"	78"	88"	100"	109"	122"	132"		142"
13'	3"	14"	27"	38"	46"	56"	68"	78"	88"	100"	114"	122"	134"		148"
13' 6"	3"	14"	27"	38"	46"	56"	68"	78"	88"	100"	109"	122"	134"	144"	154"
14'	3"	14"	27"	38"	46"	56"	68"	78"	88"	100"	114"	122"	134"	146"	160"

DOOR	TRACK ATTACHMENT OPTION 2													SPLICE
HEIGHT	A	B	C	D	E	F	G	H	I	J	K	L	M	S
6' 6"	3.5"	10"	22"	34"	46"	58"								70"
7'	3.5"	10"	22"	34"	46"	58"								76"
7' 6"	3.5"	10"	22"	34"	46"	58"	70"							82"
8'	3.5"	10"	22"	34"	46"	58"	70"							88"
8' 6"	3.5"	10"	22"	34"	46"	58"	70"	82"						94"
9'	3.5"	10"	22"	34"	46"	58"	70"	82"						100"
9' 6"	3.5"	10"	22"	34"	46"	58"	70"	82"	94"					106"
10'	3.5"	10"	22"	34"	46"	58"	70"	82"	94"					112"
10' 6"	3.5"	10"	22"	34"	46"	58"	70"	82"	94"	106"				118"
11'	3.5"	10"	22"	34"	46"	58"	70"	82"	94"	106"				124"
11' 6"	3.5"	10"	22"	34"	46"	58"	70"	82"	94"	106"	118"			130"
12'	3.5"	10"	22"	34"	46"	58"	70"	82"	94"	106"	118"			136"
12'6"	3.5"	10"	22"	34"	46"	58"	70"	82"	94"	106"	118"	130"		142"
13'	3.5"	10"	22"	34"	46"	58"	70"	82"	94"	106"	118"	130"		148"
13' 6"	3.5"	10"	22"	34"	46"	58"	70"	82"	94"	106"	118"	130"	142"	154"
14'	3.5"	10"	22"	34"	46"	58"	70"	82"	94"	106"	118"	130"	142"	160"

ALL TRACK ATTACHMENT SPACING +/−2" ALLOWED WITH SYP OR SPF NO. 2 OR BETTER ONLY

TABLE 2

Section			Stile Locations (Measured From Left Edge)			Panel Arrangements	
Width (ft)	Width (in)	Height(s) (in)	1st (in)	2nd (in)	3rd (in)	Width to Leading Embossment Edge (in)	Spacing Between Embossment Pairs (in)
6'-0"	72	18&21	24.582	47.295		3.799	3.861
7'-6"	90	18&21	22.487	44.938	67.389	2.036	4.000
7'-8"	92	18&21	22.577	45.938	69.299	2.126	5.820
7'-10"	94	18&21	23.577	46.938	70.299	3.126	5.820
8'-0"	96	18&21	24.563	47.938	71.313	4.112	5.848
8'-2"	98	18&21	25.063	48.938	72.813	4.612	6.848
8'-4"	100	18&21	25.563	49.938	74.313	5.112	7.848
8'-6"	102	18&21	26.063	50.938	75.813	5.612	8.848
8'-8"	104	18&21	26.563	51.938	77.313	6.112	9.848
8'-10"	106	18&21	27.063	52.938	78.813	6.612	10.848
9'-0"	108	18&21	27.563	53.938	80.313	7.112	11.848

REV	DESCRIPTION OF REVISIONS	DATE	BY
A	UPDATED WJATS AND ADDED ASCE MPH DETAIL	1/19/12	RLR

MAX SIZE
9' x 14'

DESIGN LOADS
+54.4 PSF
−62.0 PSF

LARGE MISSLE IMPACT RESISTANCE

STATE OF TEXAS
THOMAS L. SHELMERDINE
85829
LICENSED
PROFESSIONAL ENGINEER
03/06/2012

Amarr

165 CARRIAGE COURT WINSTON-SALEM, N.C. 27105 WWW.AMARR.COM

Model #500 Classica 1000, 2000
FLUSH AND BEAD PANEL

SIZE	DRAWN BY SKW	DATE 09/11/08	DRAWING NUMBER
B	CHECKED BY SKW	DATE 09/11/08	IRC-5309-185-21-1

ENGINEER: THOMAS L. SHELMERDINE P.E. LIC. No. 0048579 | SHEET 3 OF 3