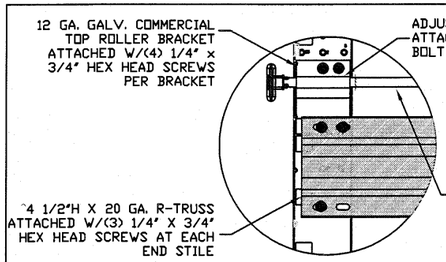

TYPICAL TOP FIXTURES (1)
N.T.S.

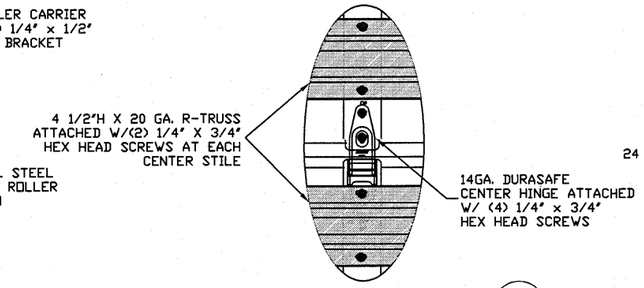

TYPICAL DURASAFE CENTER HINGE (2)
N.T.S.

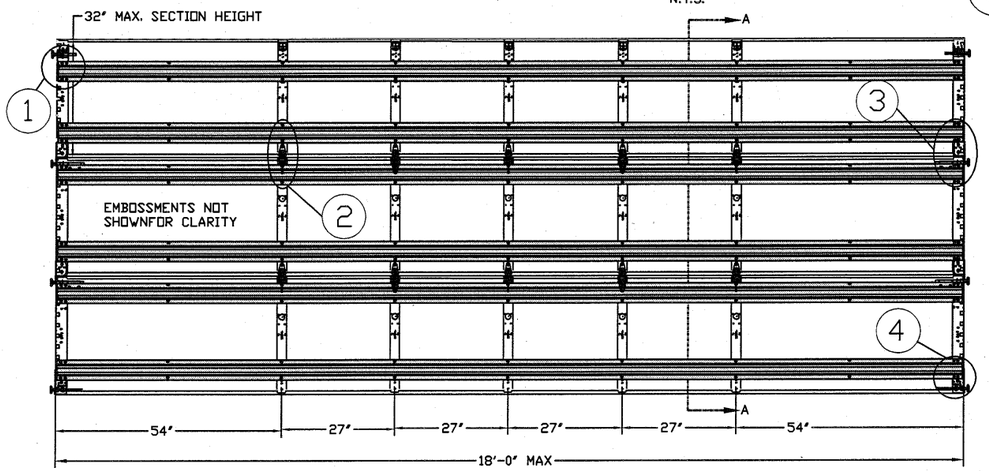

INSIDE ELEVATION
N.T.S.

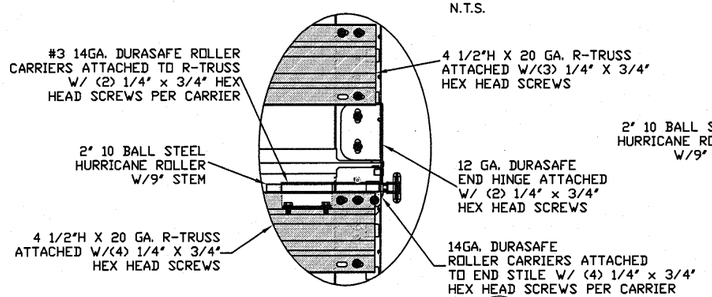

TYPICAL DURASAFE END HINGE (3)
N.T.S.

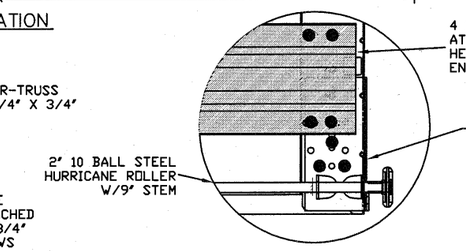

TYPICAL BOTTOM BRACKET (4)
N.T.S.

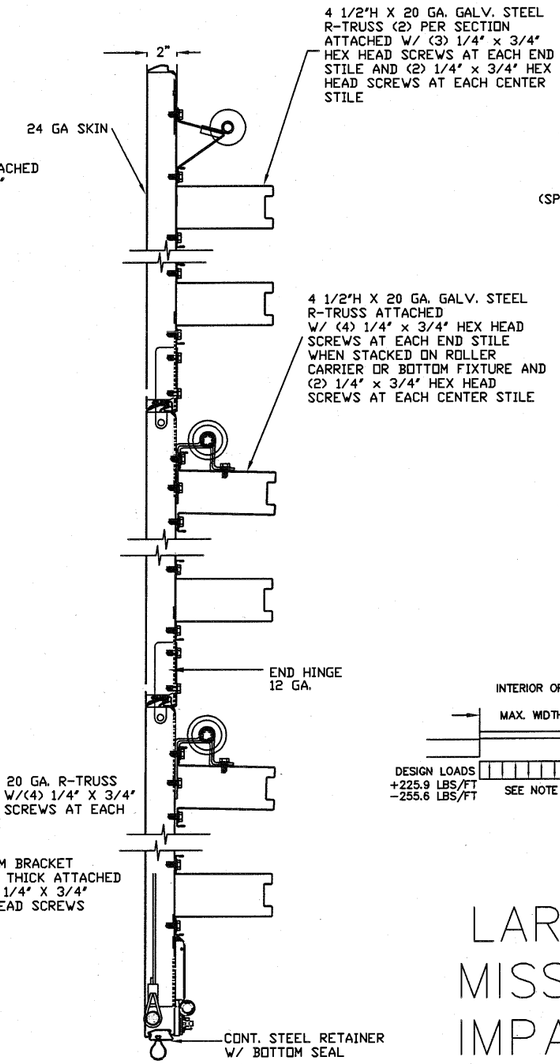

SECTION A–A (SIDE VIEW)
N.T.S.

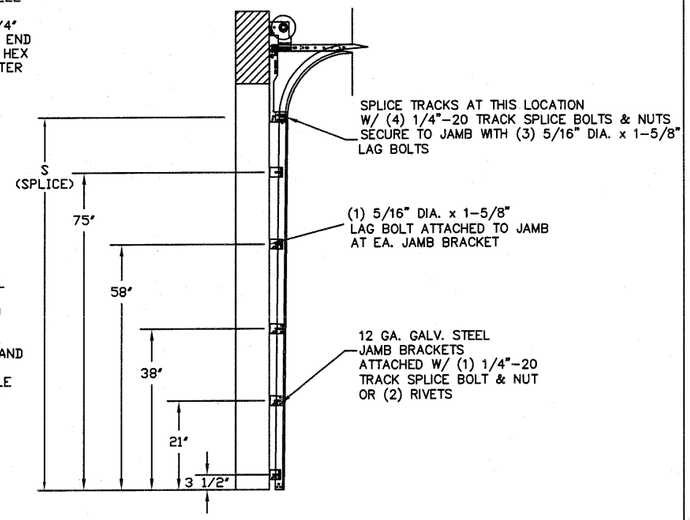

TRACK CONFIGURATION FOR 8' TALL DOORS
N.T.S.
ALL TRACK ATTACHMENTS +/– 2" WITH SYP NO. 2 OR BETTER ONLY

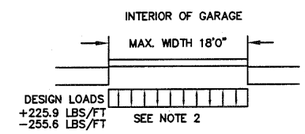

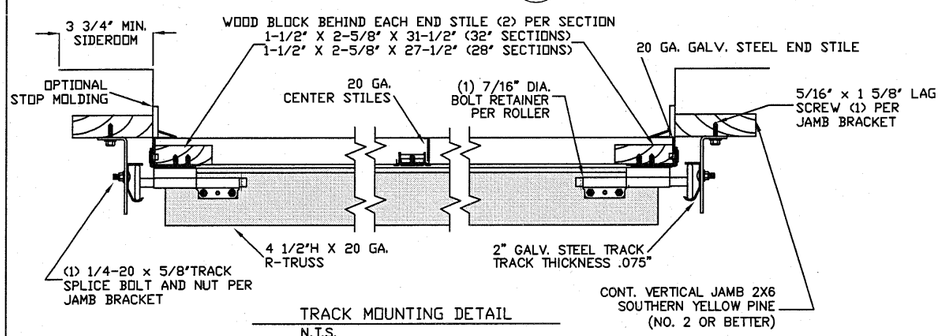

TRACK MOUNTING DETAIL
N.T.S.

THE METHOD OF TESTING WAS IN SUBSTANTIAL CONFORMANCE WITH THE PROCEDURE DESCRIBED IN ASTM E330 AND DASMA 108. THE PRESSURES SHOWN ON THE DRAWINGS WERE CALCULATED USING ASCE 7–98/02/05 WITH THE FOLLOWING PARAMETERS (5 FEET OF DOOR WIDTH IN THE END ZONE, ROOF AT ANY SLOPE, AND I=1.0):

WIND SPEED (MPH)	130	118	112	107	103
EXPOSURE LEVEL	B	C	C	D	D
MEAN ROOF HEIGHT	30'	15'	25'	15'	25'

LARGE MISSILE IMPACT RESISTANCE

SPECIFICATIONS AND NOTES

1. ALL THE LOAD FROM THE DOOR IS TRANSFERRED TO THE VERTICAL TRACK, FROM THE TRACK THE LOAD IS TRANSFERRED TO THE VERTICAL JAMBS. THE HORIZONTAL JAMB OR HEADER RECEIVES NO PORTION OF THE LOAD TRANSFERRED FROM THE DOOR.
2. EACH VERTICAL JAMBS RECEIVES MAXIMUM DESIGN LOADS OF: +225.9 LBS/FT & –255.6 LBS/FT
3. DOORS AND HARDWARE WILL BE DESIGNED, MANUFACTURED AND INSTALLED WITH STANDARDS AS SET FORTH BY DASMA.
4. DOOR SECTIONS SHALL BE 24 GA. MIN. (.022") ROLLED FORMED LIGHT COMMERCIAL QUALITY
5. SUPPORTING STRUCTURAL ELEMENTS SHALL BE DESIGNED BY A REGISTRED PROFESSIONAL ENGINEER FOR WIND LOADS INDICATED ON THIS DRAWING IN ADDITION TO OTHER LOADINGS.

REV	DESCRIPTION OF REVISIONS	DATE	BY

MAX SIZE
18' x 8'

DESIGN LOADS
+25.1 PSF
–28.4 PSF

TEST LOADS
(1.5 x DESIGN LOADS)
+37.7 PSF
–42.6 PSF

Thomas L. Shelmerdine, PE (TX PE #85829)
Structural Solutions, PA (TX Firm #F-004063)

STATE OF TEXAS
THOMAS L. SHELMERDINE
85829
LICENSED
PROFESSIONAL ENGINEER
TX

5921-G W. Friendly Ave., Greensboro, NC 27410

Amarr GARAGE DOORS
165 CARRIAGE COURT WINSTON-SALEM, N.C. 27105

MODEL #500 CLASSICA

SIZE	DRAWN BY RLR	DATE 07/17/13	DRAWING NUMBER
B	CHECKED BY	DATE	IRC-5318-130-24-I
			SHEET 1 OF 2

TABLE 1

Section	Center Stile Locations (Measured from Left Edge)				
Width (ft)	1st (in)	2st (in)	3rd (in)	4th (in)	5th (in)
09' 2	28.13	55.00	81.88		
09' 4	28.63	56.00	83.38		
09' 6	29.13	57.00	84.88		
09' 8	29.63	58.00	86.38		
09' 10	30.13	59.00	87.88		
10' 0	30.63	60.00	89.38		
10' 2	31.13	61.00	90.88		
10' 4	31.63	62.00	92.38		
10' 6	32.13	63.00	93.88		
10' 8	32.63	64.00	95.38		
10' 10	33.13	65.00	96.88		
11' 0	33.63	66.00	98.38		
11' 2	34.13	67.00	99.88		
11' 4	34.63	68.00	101.38		
11' 6	35.13	69.00	102.88		
11' 8	35.63	70.00	104.38		
11' 10	36.13	71.00	105.88		
12' 0	24.625	48.31	72	95.688	119.375
12' 2	25.125	49.06	73	96.938	120.875
12' 4	25.625	49.81	74	98.188	122.375
12' 6	26.125	50.56	75	99.438	123.875
12' 8	26.625	51.31	76	100.69	125.375
12' 10	27.125	52.06	77	101.94	126.875
13' 0	27.625	52.81	78	103.19	128.375
13' 2	28.125	53.56	79	104.44	129.875
13' 4	28.625	54.31	80	105.69	131.375
13' 6	29.125	55.06	81	106.94	132.875
13' 8	29.625	55.81	82	108.19	134.375
13' 10	30.125	56.56	83	109.44	135.875
14' 0	30.625	57.31	84	110.69	137.375
14' 2	31.125	58.06	85	111.94	138.875
14' 4	31.625	58.81	86	113.19	140.375
14' 6	32.125	59.56	87	114.44	141.875
14' 8	32.625	60.31	88	115.69	143.375
14' 10	33.125	61.06	89	116.94	144.875
15' 0	33.625	61.81	90	118.19	146.375
15' 2	34.125	62.56	91	119.44	147.875
15' 4	34.625	63.31	92	120.69	149.375
15' 6	47.42	70.208	93.00	115.79	138.58
15' 8	48.02	71.008	94.00	116.99	139.98
15' 10	48.62	71.808	95.00	118.19	141.38
16' 0	48.42	72.208	96.00	119.79	143.58
16' 2	48.75	72.880	97.00	121.13	145.25
16' 4	49.08	73.540	98.00	122.46	146.92
16' 6	49.42	74.210	99.00	123.79	148.59
16' 8	49.92	74.960	100.00	125.04	150.09
16' 10	50.42	75.710	101.00	126.29	151.59
17' 0	50.92	76.460	102.00	127.54	153.09
17' 2	51.42	77.210	103.00	128.79	154.59
17' 4	51.92	77.960	104.00	130.04	156.09
17' 6	52.42	78.710	105.00	131.29	157.59
17' 8	52.92	79.460	106.00	132.54	159.09
17' 10	53.42	80.210	107.00	133.79	160.59
18' 0	53.92	80.960	108.00	135.04	162.09

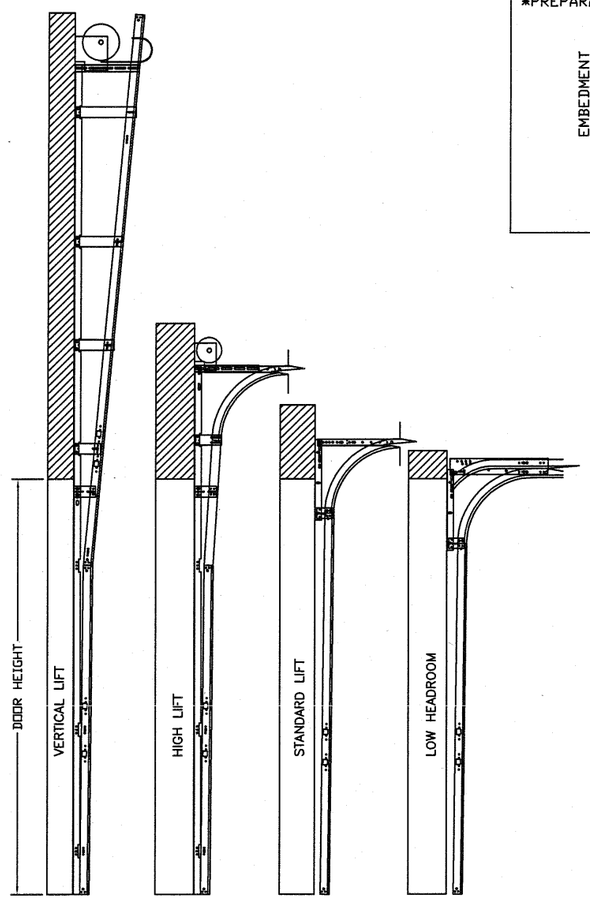

AVAILABLE TRACK CONFIGURATIONS
N.T.S.

WOOD JAMB ATTACHMENT TO STRUCTURE

2 X 6 VERTICAL JAMB ATTACHMENT TO WOOD FRAME STRUCTURE
5/16" X 3" LAG SCREWS STARTING 6" FROM ENDS THEN 20" O.C. (1 1/2" EMBEDMENT)
2 X 6 VERTICAL JAMB ATTACHMENT TO 2,000 PSI CONCRETE
HILTI KWIK BOLT 3/8" X 4" STARTING 6" FROM ENDS THEN 24" O.C. (2 1/2" EMBEDMENT)
HILTI SLEEVE ANCHOR 3/8" X 2-3/4" STARTING 6" FROM ENDS THEN 18" O.C. (1 1/4" EMBEDMENT)
ITW/RAMSET REDHEAD (TRU-BOLT) 3/8" X 4" STARTING 6" FROM ENDS THEN 24" O.C. (2 1/2" EMBEDMENT)
2 X 6 VERTICAL JAMB ATTACHMENT TO HOLLOW C-90 BLOCK
SIMPSON 1/4" X 3" TITEN SCREWS STARTING 6" FROM ENDS, USE PAIRS OF FASTENERS (3" APART) AT 8" O.C. (1 1/2" EMBEDMENT)
HILTI 1/4" X 2-3/4" KWIK-CON II+ SCREWS STARTING 6" FROM ENDS, USE PAIRS OF FASTENERS (3" APART) AT 8" O.C. (1 1/4" EMBEDMENT)

2 X 6 VERTICAL JAMB ATTACHMENT TO GROUTED C-90 BLOCK (2000 PSI GROUT)
HILTI SLEEVE ANCHOR 3/8" X 2-3/4" STARTING 6" FROM ENDS THEN 22" O.C. (1 1/4" EMBEDMENT) (OR, USE FASTENERS FOR HOLLOW C-90 BLOCK)

*LAGS AND BOLTS CAN BE COUNTERSUNK TO PROVIDE A FLUSH MOUNTING SURFACE.
*PREPARATION OF WOOD JAMBS BY OTHERS

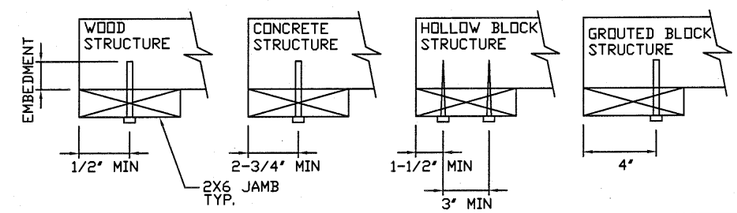

REV	DESCRIPTION OF REVISIONS	DATE	BY

MAX SIZE
18' x 8'

DESIGN LOADS
+25.1 PSF
−28.4 PSF

TEST LOADS
(1.5 x DESIGN LOADS)
+37.7 PSF
−42.6 PSF

Thomas L. Shelmerdine, PE (TX PE #85829)
Structural Solutions, PA (TX Firm #F-004063)

STATE OF TEXAS
THOMAS L. SHELMERDINE
85829
LICENSED
PROFESSIONAL ENGINEER
7-23-14
TX

5921-G W. Friendly Ave., Greensboro, NC 27410

Amarr GARAGE DOORS
165 CARRIAGE COURT WINSTON-SALEM, N.C. 27105

MODEL #500 CLASSICA

SIZE	DRAWN BY RLR	DATE 07/17/13	DRAWING NUMBER
B	CHECKED BY	DATE	IRC-5318-130-24-I
			SHEET 2 OF 2