L'TR	REVISION	DATE	BY	E.C.O.
-	ORIGINAL ISSUE	11/02/09	RM	1430
A	REVISED DOOR CONSTRUCTION	05/02/13	TJE	1594
B	ADD CP0020 TO SLAT PROFILE	11/12/13	TJE	1594

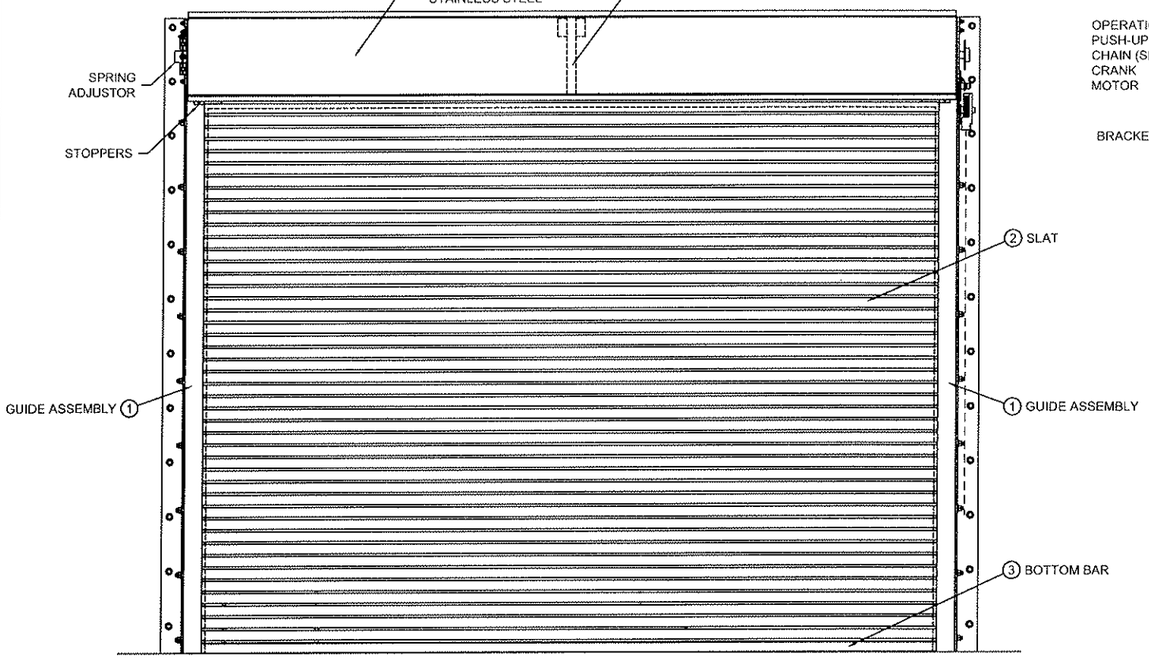

ROLL-UP MECHANISM NOT INCLUDED IN THIS APPROVAL. MUST BE CERTIFIED BY AN INDEPENDENT TESTING AGENCY IF REQUIRED.

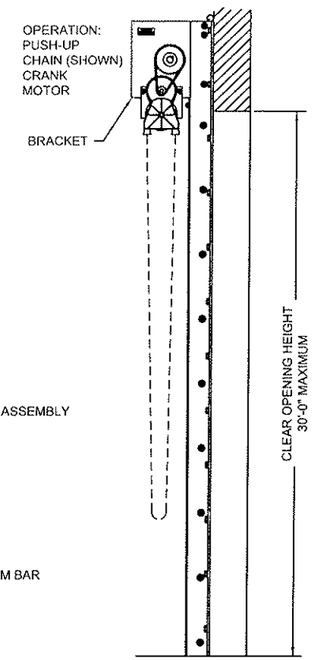

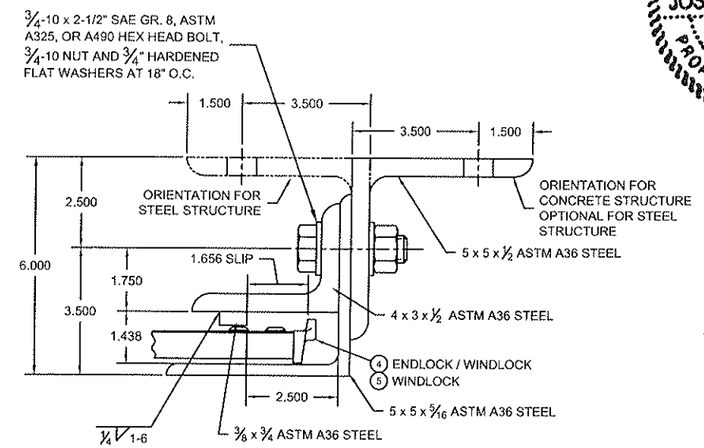

1 GUIDE ASSEMBLY DETAIL
1/2 SCALE

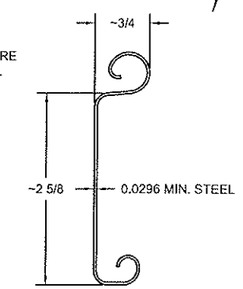

2 CP0020 SLAT DETAIL
TYPICAL SECTION
ASTM A653 HSLAS TYPE B GRADE 40 G60 OR
ASTM A653 HSLAS TYPE A GRADE 40 G60 OR
ASTM A653 STRUCTURAL STEEL GRADE 40 G60
OR TYPE 304 / UNS S30400 STAINLESS STEEL (MIN. YIELD 40,000 psi)
OR TYPE 430 / UNS S43000 STAINLESS STEEL (MIN. YIELD 40,000 psi)
OR TYPE 201 / UNS S20100 STAINLESS STEEL (MIN. YIELD 40,000 psi)
FULL SCALE

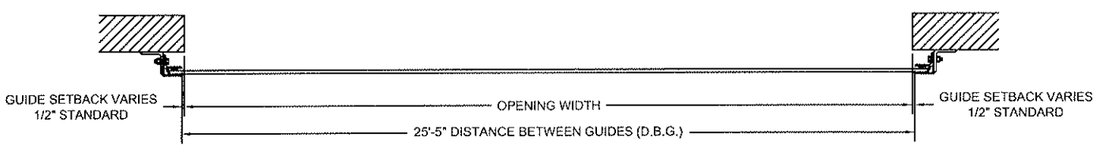

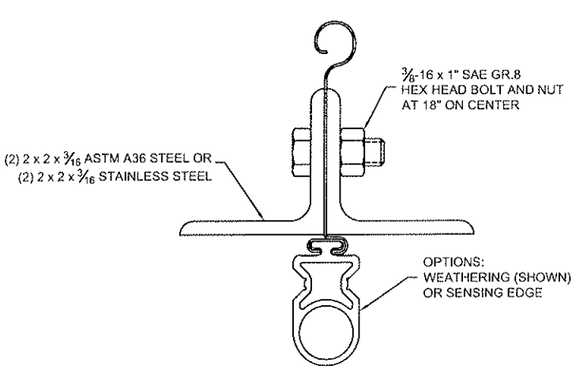

3 BOTTOM BAR DETAIL
TYPICAL SECTION
FULL SCALE

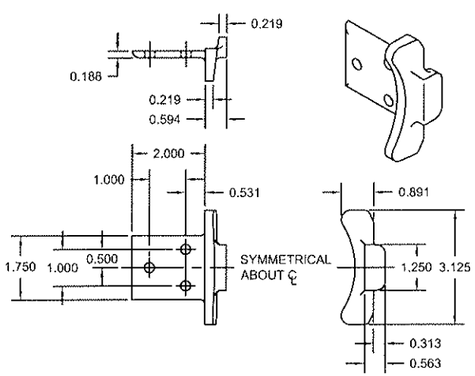

4 ENDLOCK / WINDLOCK DETAIL
FERRITIC MALLEABLE IRON PER ASTM A47 - GRADE 32510
OR DUCTILE IRON PER ASTM A536 GRADE 65-45-12. GALVANIZED
IN ACCORDANCE WITH ASTM A153, G90 ZINC-COATING.
1/2 SCALE

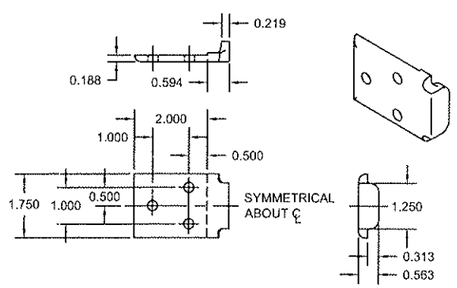

5 WINDLOCK DETAIL
FERRITIC MALLEABLE IRON PER ASTM A47 - GRADE 32510
OR DUCTILE IRON PER ASTM A536 GRADE 65-45-12. GALVANIZED
IN ACCORDANCE WITH ASTM A153, G90 ZINC-COATING.
1/2 SCALE

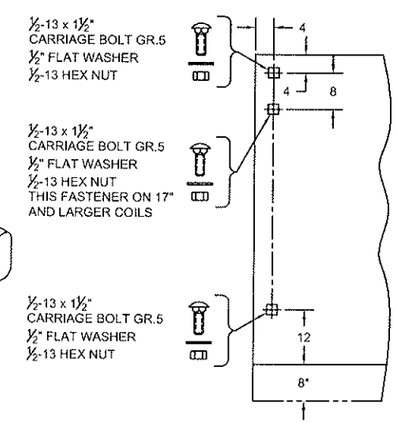

6 BRACKET MOUNTING DETAIL
0.172 MIN. THICKNESS
* 2" EXTENSION WHEN 8" AND LARGER SHAFT ASSEMBLY IS SUPPLIED

STATE OF TEXAS
JOSEPH H. DIXON, JR.
18627
LICENSED
PROFESSIONAL ENGINEER
3/19/14

NOTES:

1. THIS ROLL-UP DOOR SYSTEM IS DESIGNED IN ACCORDANCE WITH THE LATEST EDITION INTERNATIONAL BUILDING CODE AND FLORIDA BUILDING CODE, AS A LARGE MISSILE IMPACT RESISTANT SYSTEM.

2. POSITIVE AND NEGATIVE DESIGN PRESSURE CALCULATIONS SHALL BE PERFORMED FOR SPECIFIC JOBS IN ACCORDANCE WITH ASCE 7 *MINIMUM DESIGN LOADS FOR BUILDINGS AND OTHER STRUCTURES*. WIND LOADS DETERMINED FOR OPENINGS SHALL BE LESS THAN OR EQUAL TO DOOR DESIGN PRESSURES NOTED BELOW.

3. THE DETAILS AND SPECIFICATIONS SHOWN HEREIN REPRESENT THE PRODUCTS TESTED FOR UNIFORM STATIC AIR PRESSURE IN CONFORMANCE WITH DADE COUNTY PROTOCOLS TAS 201, 202 AND 203.
   POSITIVE DESIGN LOAD = 60 PSF
   NEGATIVE DESIGN LOAD = 60 PSF

4. TESTING PERFORMED BY ARCHITECTURAL TESTING, INC. (YORK, PENNSYLVANIA) TEST REPORT No. B8848.01-109.18.

5. SUPERIMPOSED LOADS ON THE JAMBS FROM THIS DOOR ARE DESIGNATED AS F1, F2, AND F3 HEREIN. CONTRACTORS SHALL HAVE A LICENSED AND REGISTERED ENGINEER OR ARCHITECT VERIFY ADEQUACY OF BUILDING STRUCTURE TO RESIST SUPERIMPOSED LOAD F1, F2, AND F3.

6. ALL WELDING SHALL BE PERFORMED BY QUALIFIED WELDERS IN ACCORDANCE WITH AWS SPECIFICATIONS, LATEST EDITION. ALL WELDING ELECTRODES SHALL CONFORM TO AWS A5.1, GRADE E-70. MINIMUM WELDING PROCESS SHALL BE ARC WELDING AWS E7014 OR MIG WELDING AWS ER70S-6.

7. ANCHOR NOTES:
   A. EMBEDMENT DEPTH DOES NOT INCLUDE STUCCO FINISH.
   B. ANCHORS SHALL BE INSTALLED IN ACCORDANCE WITH MANUFACTURERS SPECIFICATIONS.

8. DOOR MAY BE INSTALLED ON THE INSIDE OR OUTSIDE OF AN EXTERIOR WALL.

9. A 33% INCREASE IN ALLOWABLE STRESS HAS NOT BEEN USED IN THE DESIGN OF THIS PRODUCT.

CORNELL
100 ELMWOOD AVENUE
CRESTWOOD INDUSTRIAL PARK
MOUNTAINTOP, PA 18707

TITLE
25'-5" 60-PSF UNINSULATED
ROLLING STEEL DOOR

SIZE	DRAWN	DWG NO	REV
D	R. MAGGIO	ES16-41B	B
SCALE AS NOTED		SHEET 1 OF 2	

L'TR	REVISION	DATE	BY	E.C.O.
*	ORIGINAL ISSUE	11/02/09	RM	1430
A	REVISED DOOR CONSTRUCTION	05/02/13	TJE	1594
	ADD TO SLAT PROFILE	11/12/13	TJE	1594

STATE OF TEXAS
JOSEPH H. DIXON, JR.
18627
LICENSED
PROFESSIONAL ENGINEER
3/19/14

CONCRETE FASTENER SPACING			
CONCRETE STRENGTH (psi)	MAXIMUM FASTENER SPACING (in.)		
	HILTI	SIMPSON	ITW REDHEAD
3000	7 1/2	7	5
4000	10 1/2	8	8

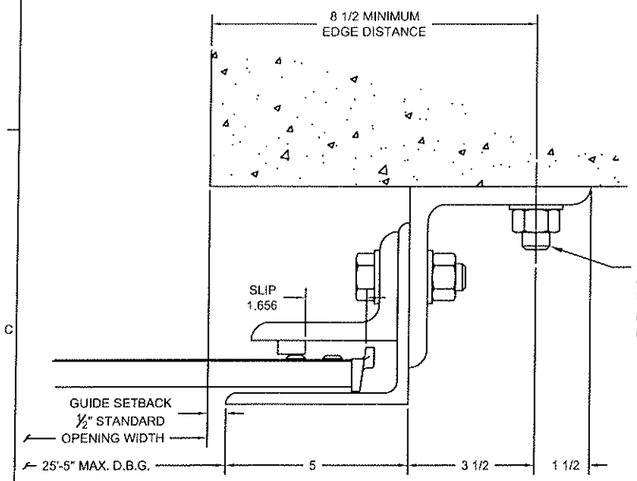

GUIDE ASSEMBLY
CONCRETE STRUCTURE

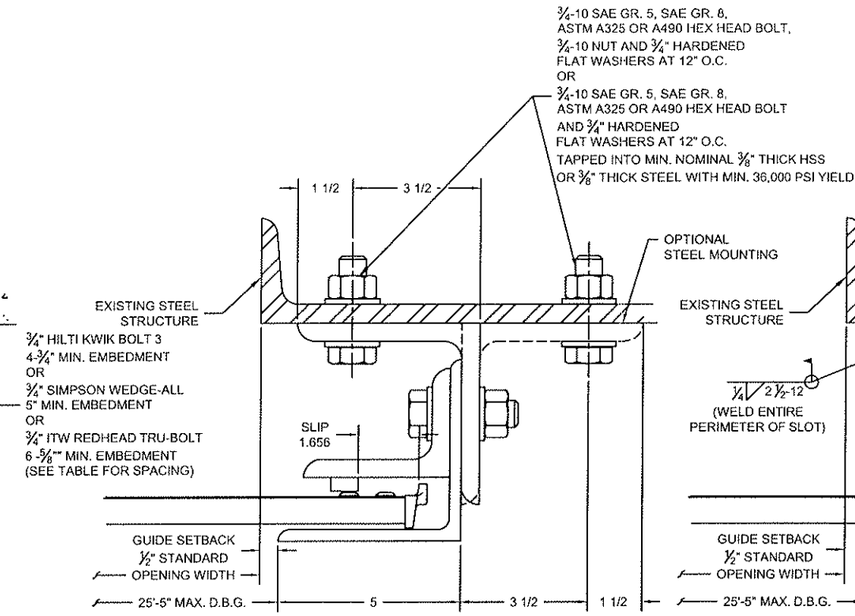

GUIDE ASSEMBLY
STEEL STRUCTURE

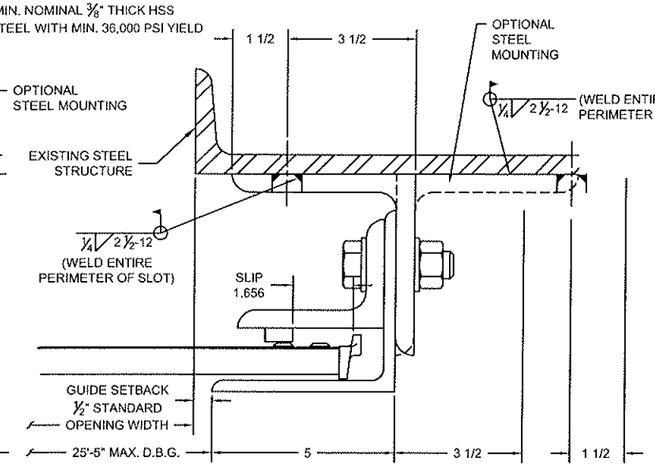

GUIDE ASSEMBLY
STEEL STRUCTURE

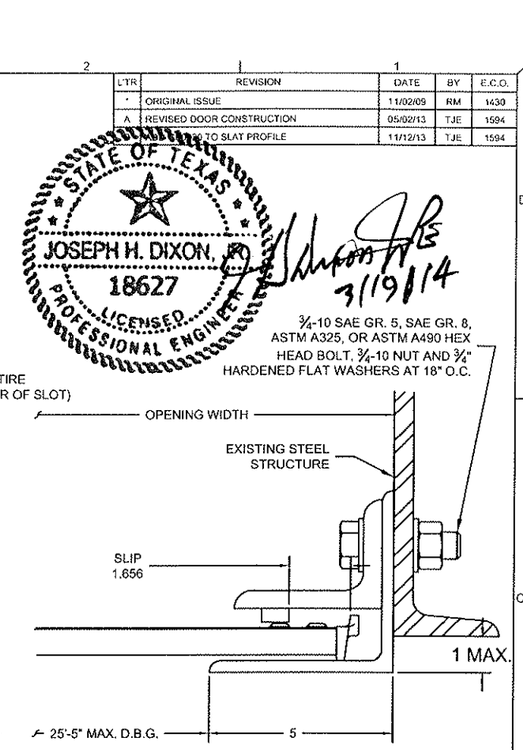

GUIDE ASSEMBLY
STEEL STRUCTURE
(BETWEEN JAMBS GUIDE)

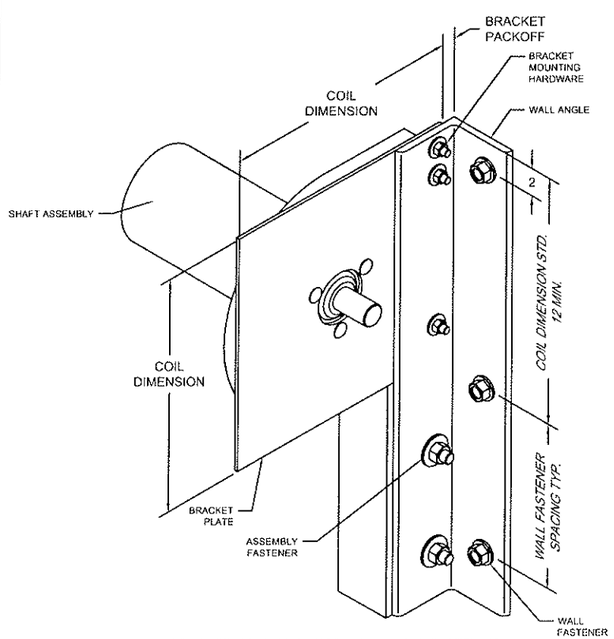

BRACKET MOUNTING / TOP WALL ANGLE FASTENING
BRACKET MOUNTING PER DETAIL 6 DEPICTED, OTHER BRACKET MOUNTINGS ARE AVAILABLE

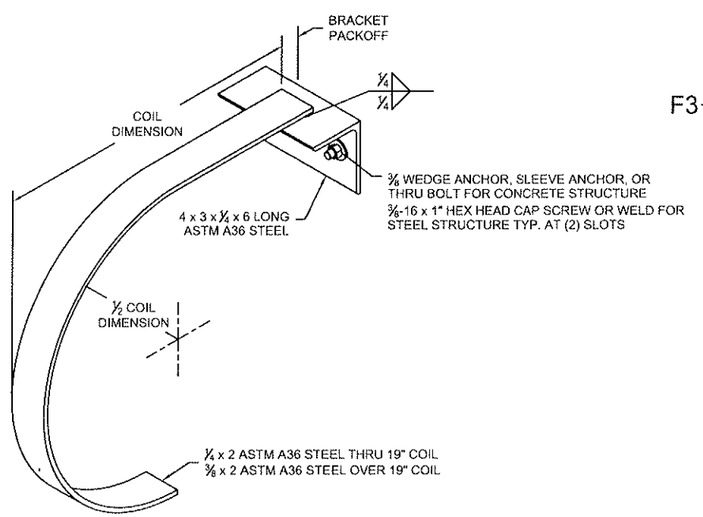

7 MID-HOOD SUPPORT DETAIL
(WHEN REQUIRED)

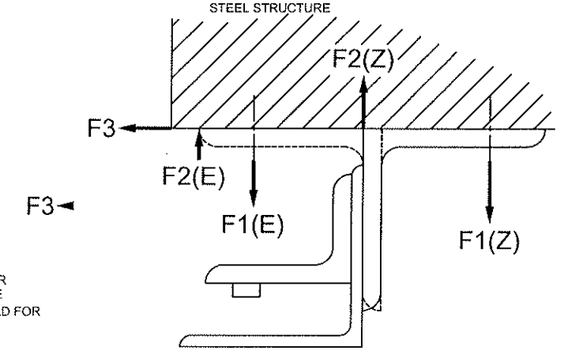

Z OR E GUIDE

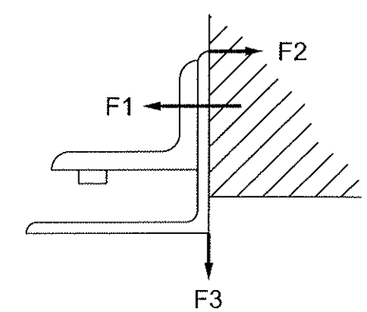

BETWEEN JAMBS GUIDE

UNREDUCED WIND FORCES ON BUILDING STRUCTURE (LBS / FOOT OF HEIGHT)																	
Z-GUIDE						E-GUIDE						BETWEEN JAMBS GUIDE					
POSITIVE			NEGATIVE			POSITIVE			NEGATIVE			POSITIVE			NEGATIVE		
F1	F2	F3	F1	F2	F3	F1	F2	F3	F1	F2	F3	F1	F2	F3	F1	F2	F3
2611	1840	2901	4618	5389	2901	8406	7635	2901	8464	9235	2901	4159	1258	771	8842	594	771

BUILDING DESIGNER NOTE:
STRUCTURE MUST BE DESIGNED TO SUPPORT F1, F2, AND F3 FORCES (LBS./FT. OF OPENING HEIGHT) AT EACH JAMB.

CORNELL
100 ELMWOOD AVENUE
CRESTWOOD INDUSTRIAL PARK
MOUNTAINTOP, PA 18707

TITLE
25'-5" 60-PSF UNINSULATED ROLLING STEEL DOOR

SIZE	DRAWN	DWG NO	REV
D	R. MAGGIO	ES16-41B	B
SCALE AS NOTED		SHEET 2 OF 2	